Downloaded from http://www.everyspec.com

METRIC
MIL-STD-1472G
11 January 2012
SUPERSEDING
MIL-STD-1472F
23 August 1999

DEPARTMENT OF DEFENSE
DESIGN CRITERIA STANDARD

HUMAN ENGINEERING

AMSC N/A AREA HFAC

DISTRIBUTION STATEMENT A. Approved for public release; distribution is unlimited.

Downloaded from http://www.everyspec.com

FOREWORD

1. This standard is approved for use by all Departments and Agencies of the Department of Defense.

2. This standard establishes general human engineering criteria for design and development of military systems, equipment, and facilities. Human engineering is one of seven domains of Human-systems integration (as defined in the DoD 5000 series) and is synonymous with Human factors engineering. The purpose of this standard is to present human engineering design criteria, principles, and practices to be applied in the design of systems, equipment, and facilities so as to:

a. Achieve required performance by operator, control, and maintenance personnel.

b. Achieve required manpower readiness for system performance.

c. Achieve required reliability of personnel-equipment combinations.

d. Foster design standardization within and among systems.

3. This standard does not alter requirements for system development participation of human engineering specialists to interpret and implement these practices and to provide solutions to human engineering problems which arise and which are not specifically covered herein.

4. Requirements herein are expressed in the International System of Units (SI). As a convenience, the metric units are accompanied by their approximate customary system equivalents (in parentheses). Angular measure is expressed in degrees unless it is necessary to specify fractions of a degree where milliradians are used.

5. MIL-STD-1472 has not had a thorough technical review since the late 1980s. MIL-STD-1472D was promulgated in March 1989, and hence addressed the level of technology that existed through 1988 or possibly 1987. The "E" revision, promulgated in 1996, was mostly cosmetic; the text was changed to a non-proportional font in order to reduce white space. The "F" revision, promulgated in 1999, consisted mainly of moving the anthropometric data from MIL-STD-1472 to MIL-HDBK-759, but little else. As a result, requirements and design criteria contained in previous versions of MIL-STD-1472 may no longer be applicable to today's technology. The operational benefits of emerging technologies may be limited due to the out-of-date design criteria.

Tomorrow's systems will depend on greater cognitive processing on the part of the human operator, maintainer, and support personnel. Portable or wearable computers are likely to be commonplace. New display concepts such as virtual reality, haptic (touch sensing), and three-dimensional are receiving a great deal of interest, as are voice, pointing, gesture, and eye-blink control systems. Technology, if misapplied, will impose human performance requirements that cannot be satisfied. Many technologies are evolving rapidly; the human is not. The benefits of new technologies may not be realized if one fails to consider human capabilities and limitations.

The changes made in the "G" revision over the previous version are substantial. The organizational structure of the standard was revamped to group similar material in the same section of the document. Obsolete provisions (e.g., reference to dot-matrix printers) were deleted, out-of-date provisions were updated to reflect the latest research, and new provisions were added to address emerging technologies. See 6.4 for a summary of changes to the present "G" revision.

6. Comments, suggestions, or questions on this document should be addressed to: Commander, U.S. Army Aviation and Missile Command, ATTN: RDMR-SET, 5400 Fowler Road, Redstone Arsenal, AL 35898-5000 or emailed to streview@amrdec.army.mil. Since contact information can change, you may want to verify the currency of this address information using the ASSIST Online database at https://assist.daps.dla.mil.

Downloaded from http://www.everyspec.com

CONTENTS

PARAGRAPH	TITLE	PAGE
1.	SCOPE	1
1.1	Scope	1
1.2	Purpose.	1
1.3	Application	1
1.4	Manufacturing tolerances	1
2.	APPLICABLE DOCUMENTS	1
2.1	General	1
2.2	Government documents.	1
2.2.1	Specifications, standards, and handbooks.	1
2.2.2	Other Government documents, drawings, and publications	2
2.3	Non-Government publications.	3
2.4	Order of precedence.	5
3.	DEFINITIONS	6
3.1	Acronyms used in this standard.	6
3.2	Abbreviations used in this standard.	7
3.3	Definitions used in this standard.	8
3.3.1	Alarm.	8
3.3.2	Alert.	8
3.3.3	Boot (accelerator operation)	8
3.3.4	Boot (brake operation).	9
3.3.5	Central 90 percent accommodation	9
3.3.6	Contrast ratio (CR)	9
3.3.7	Deuteranope.	9
3.3.8	Display frame	9
3.3.9	Egocentric perspective.	9
3.3.10	Elbow (dynamic)	9
3.3.11	Elbow (static).	9
3.3.12	Field of regard	9
3.3.13	Field of view.	9
3.3.14	Font size to character height.	9
3.3.15	Fuse	9
3.3.16	Fuze	9
3.3.17	Knee width (minimum)	9
3.3.18	Knee width (optimum)	9
3.3.19	Level of automation.	9
3.3.20	Luminance contrast	10
3.3.21	Occlusion.	10
3.3.22	Pedals (minimum)	10
3.3.23	Protanope.	10
4.	GENERAL REQUIREMENTS	10
4.1	Design objectives	10
4.1.1	Work environment.	10
4.1.2	Performance degradation.	10
4.1.3	User capabilities	10
4.1.4	Task performance.	10
4.1.5	Personnel, training, and skill requirements.	10
4.1.6	System manpower	10
4.2	Standardization.	10
4.3	Off-the-shelf equipment	10
4.3.1	Selection.	10
4.3.2	Modification	10
4.3.3	Redesign approval	10
4.4	Human engineering design.	10

Downloaded from http://www.everyspec.com

PARAGRAPH	TITLE	PAGE
4.4.1	Compliance.	10
4.4.2	Program requirements.	10
4.4.3	Application.	11
4.4.4	Accommodation.	11
4.4.5	Human engineering requirements.	11
4.4.6	Human engineering activities.	11
4.4.7	Design factors.	11
4.5	Fail-safe design.	12
4.6	Simplicity of design.	12
4.6.1	Equipment simplicity.	12
4.6.2	Training.	12
4.7	Interaction.	12
4.8	Safety.	12
4.8.1	System and personnel safety factors.	12
4.8.2	Design of nonmilitary-unique workplaces and equipment.	12
4.9	Ruggedness.	12
4.10	Chemical, biological, radiological, nuclear, and high-yield explosive (CBRNE) survivability.	12
4.10.1	CBRNE compatibility.	12
4.10.2	Performance of mission-essential operations.	12
4.10.3	Susceptibility to reduction of inherent CBRNE hardness.	12
4.10.3.1	CBRNE hardness verification.	12
4.10.3.2	CBRNE hardness and maintenance.	12
4.10.4	CBRNE hardness and maintenance personnel expertise.	12
4.11	Electromagnetic pulse hardening.	12
4.11.1	Electromagnetic pulse hardening requirements.	12
4.11.2	Access to EMP-hardened facilities.	12
4.11.3	Electromagnetic barrier accessibility.	12
4.12	Automation.	13
4.12.1	Automation of functions.	13
4.12.2	Human involvement.	13
4.12.3	Automated function characteristics.	13
4.12.4	Indication of operating mode.	13
4.13	Functional use of color.	13
4.14	Design of aircrew systems.	13
4.15	System integration.	13
4.16	Recycled, recovered, or environmentally preferable materials.	13
5.	DETAILED REQUIREMENTS	13
5.1	Controls.	13
5.1.1	General criteria.	13
5.1.1.1	Selection.	13
5.1.1.2	Direction of movement.	17
5.1.1.3	Grouping and arrangement.	18
5.1.1.4	Coding.	19
5.1.1.5	Labeling of controls.	21
5.1.1.6	Compatibility with handwear.	21
5.1.1.7	Blind operation.	21
5.1.1.8	Prevention of accidental actuation.	21
5.1.1.9	Feedback.	22
5.1.1.10	Hazardous operations.	23
5.1.2	Control/display integration.	23
5.1.2.1	General criteria.	23
5.1.2.2	Position relationships.	25
5.1.2.3	Movement relationships.	27
5.1.2.4	Control/display movement ratio.	28

Downloaded from http://www.everyspec.com

PARAGRAPH	TITLE	PAGE
5.1.2.5	Signal precedence.	29
5.1.3	Computer controls.	29
5.1.3.1	Touch-screen controls for displays.	29
5.1.3.2	Keyboards.	32
5.1.3.3	Mouse/trackballs/joysticks.	34
5.1.3.4	Data entry.	41
5.1.3.5	Interactive control.	43
5.1.4	Mechanical controls.	48
5.1.4.1	Rotary controls.	48
5.1.4.2	Linear controls.	61
5.1.4.3	High-force controls.	80
5.1.4.4	J-Handles.	81
5.1.5	Miniature controls.	81
5.1.5.1	Use.	81
5.1.5.2	Dimensions, resistance, displacement, and separation.	81
5.1.5.3	Other requirements.	81
5.1.6	Eye- and head-based controls.	81
5.1.6.1	Use.	82
5.1.6.2	Vibration.	82
5.1.6.3	Precision.	82
5.1.6.4	Dwell times.	82
5.1.6.5	Response time.	82
5.2	Visual displays.	82
5.2.1	Installation of visual displays.	82
5.2.1.1	General.	82
5.2.1.2	Display location and arrangement.	82
5.2.1.3	Luminance considerations for visual displays.	82
5.2.1.4	Display illumination and light distribution.	84
5.2.1.5	Contrast of displays.	85
5.2.1.6	Displays for night operations.	85
5.2.2	Displays – content.	85
5.2.2.1	General.	86
5.2.2.2	Information architecture.	86
5.2.2.3	Coding.	90
5.2.2.4	Text presentation.	95
5.2.2.5	Graphic and representational displays.	98
5.2.2.6	Dynamic displays.	105
5.2.2.7	Help.	106
5.2.2.8	Printing display.	106
5.2.2.9	Data and message transmission.	107
5.2.3	Displays – hardware.	108
5.2.3.1	Electronic displays.	108
5.2.3.2	Large-screen displays.	108
5.2.3.3	Small-screen displays.	110
5.2.3.4	Handheld displays.	111
5.2.3.5	Three-dimensional (3-D) displays.	111
5.2.3.6	Head-up displays (HUDs).	112
5.2.3.7	Helmet-mounted displays (HMDs).	113
5.2.3.8	Liquid crystal displays (LCDs).	114
5.2.3.9	Plasma displays.	114
5.2.3.10	Light-emitting diodes (LEDs).	114
5.2.3.11	Other displays (CRTs, electroluminescent displays, others).	114
5.2.3.12	Dot-matrix/segmented displays.	114
5.2.3.13	Transilluminated displays.	115

Downloaded from http://www.everyspec.com

PARAGRAPH	TITLE	PAGE
5.2.3.14	Legend lights.	116
5.2.3.15	Simple indicator lights.	117
5.2.3.16	Transilluminated panel assemblies.	118
5.3	Speech and audio systems.	118
5.3.1	Audio displays.	118
5.3.1.1	General.	119
5.3.1.2	Audio signals.	121
5.3.1.3	Characteristics of audio warning signals.	122
5.3.1.4	Signal characteristics in relation to operational conditions and objectives.	123
5.3.1.5	Verbal warning signals.	124
5.3.1.6	Speech-transmission equipment.	126
5.3.1.7	Audio displays as part of the user interface.	128
5.3.1.8	Speech displays.	128
5.3.2	Speech recognition.	131
5.3.2.1	Use.	131
5.3.2.2	Nonuse.	131
5.3.2.3	General.	131
5.3.2.4	Input vocabulary.	131
5.3.2.5	Interword delays.	131
5.3.2.6	Prompting.	131
5.3.2.7	Correction capability.	132
5.3.3	Alternative input device.	132
5.4	Labeling.	132
5.4.1	General.	132
5.4.1.1	Use of labels.	132
5.4.1.2	Label characteristics.	132
5.4.2	Orientation.	132
5.4.3	Location.	132
5.4.3.1	Proximity.	133
5.4.3.2	Obscuration.	133
5.4.3.3	Moveable controls.	133
5.4.3.4	Adjacent label.	133
5.4.3.5	Placement.	133
5.4.3.6	Redundant labeling.	133
5.4.3.7	Standardization.	133
5.4.3.8	Overhead items.	133
5.4.4	Contents.	133
5.4.4.1	Equipment functions.	133
5.4.4.2	Abbreviations.	133
5.4.4.3	Irrelevant information.	133
5.4.5	Readability qualities.	133
5.4.5.1	Brevity.	133
5.4.5.2	Familiarity.	133
5.4.5.3	Comprehension.	133
5.4.5.4	Consistency.	134
5.4.5.5	Visibility and legibility.	134
5.4.5.6	Access.	134
5.4.5.7	Cables.	134
5.4.5.8	Label mounting.	134
5.4.5.9	Label surface.	134
5.4.5.10	Label contrast.	134
5.4.5.11	Label background.	134
5.4.6	Design of label characters.	135
5.4.6.1	Black characters.	135

Downloaded from http://www.everyspec.com

PARAGRAPH	TITLE	PAGE
5.4.6.2	Dark adaptation.	135
5.4.6.3	Character font and style.	135
5.4.6.4	Pictorials and symbols.	136
5.4.6.5	Borders.	136
5.4.6.6	Use of color.	136
5.4.7	Equipment labeling.	136
5.4.7.1	Units, assemblies, subassemblies, and parts.	136
5.4.7.2	Controls and displays.	138
5.4.8	Labeling for identification.	138
5.4.8.1	Assemblies.	138
5.4.8.2	Characteristics.	138
5.4.8.3	Instruction plate.	139
5.4.8.4	Lift points.	139
5.4.8.5	Caution and warning labels for safety and hazards.	139
5.5	Environment.	139
5.5.1	Environmental range.	139
5.5.1.1	Specification of environmental conditions.	139
5.5.1.2	Variation of performance standards across environmental conditions.	139
5.5.1.3	Sustained operations across all environmental conditions.	139
5.5.1.4	Mitigation of adverse effects of environmental conditions.	139
5.5.1.5	Government approval of mitigating actions.	139
5.5.2	General workplace considerations.	139
5.5.2.1	Heating, ventilating, and air conditioning.	139
5.5.2.2	Climate and other outdoor environmental considerations.	142
5.5.3	Illuminance.	144
5.5.3.1	Workspace lighting.	144
5.5.3.2	Contrast ratios.	148
5.5.3.3	Glare.	149
5.5.3.4	Reflected.	149
5.5.4	Acoustical energy and noise.	151
5.5.4.1	General.	151
5.5.4.2	Equipment and system design.	151
5.5.4.3	Total system compliance.	151
5.5.4.4	Hazardous noise.	151
5.5.4.5	Nonhazardous noise.	153
5.5.4.6	Facility design.	155
5.5.5	Vibration and shock.	156
5.5.5.1	Vehicular whole-body vibration.	156
5.5.5.2	Building vibration.	160
5.5.5.3	Equipment vibration.	160
5.5.5.4	Hand-arm (segmental) vibration.	160
5.5.6	Stealth and covert operations.	161
5.5.7	G-loading.	161
5.5.7.1	Terminology.	161
5.5.7.2	G-loading description.	161
5.6	Ground vehicles.	162
5.6.1	General.	162
5.6.2	Vehicle seating.	162
5.6.2.1	Dimensions and clearances.	162
5.6.2.2	Vertical adjustment.	162
5.6.2.3	Horizontal adjustment.	162
5.6.2.4	Back-rest angle.	165
5.6.2.5	Seat padding.	165
5.6.2.6	Safety restraints.	165

Downloaded from http://www.everyspec.com

PARAGRAPH	TITLE	PAGE
5.6.2.7	Head restraints.	165
5.6.3	Vehicle controls.	166
5.6.3.1	Dynamic effects.	166
5.6.3.2	Steering.	166
5.6.3.3	Pedals.	166
5.6.3.4	Control of hazardous operations.	166
5.6.4	Vehicle operating instructions.	166
5.6.4.1	Provision of operating instruction.	166
5.6.4.2	Format.	166
5.6.4.3	Speed notice.	166
5.6.4.4	Shift handle positions.	166
5.6.4.5	Control movements.	166
5.6.4.6	General labeling criteria.	166
5.6.5	Vehicle visibility.	166
5.6.5.1	Lateral visual field.	166
5.6.5.2	Ground view.	166
5.6.5.3	Rear view and mirrors.	166
5.6.5.4	Glare.	167
5.6.5.5	Windshields and windows.	167
5.6.5.6	Windshield wipers and washers.	167
5.6.5.7	Lighting systems.	167
5.6.5.8	Night operation.	168
5.6.5.9	Lighting for dark adaptation.	168
5.6.6	Vehicle heating and ventilation.	168
5.6.6.1	Heating.	168
5.6.6.2	Ventilation.	169
5.6.6.3	Visibility.	169
5.6.6.4	Air conditioning.	169
5.6.7	Automotive subsystems.	169
5.6.7.1	General.	169
5.6.7.2	Batteries.	170
5.6.8	Trailers, vans, and intravehicular connections.	170
5.6.8.1	Intravehicular coupling device.	170
5.6.8.2	Trailers.	171
5.6.8.3	Brakes.	171
5.6.8.4	Tires.	172
5.6.8.5	Fuel system.	172
5.6.8.6	Engine.	173
5.6.8.7	Radiators.	174
5.6.8.8	Exhaust systems.	174
5.6.8.9	Chassis.	174
5.6.9	Vans and transportable enclosures.	175
5.6.9.1	Ceiling height.	175
5.6.9.2	Access openings.	175
5.6.9.3	Access doors.	175
5.6.9.4	Steps, stairs, ladders.	175
5.6.9.5	Inclinometers.	175
5.6.10	Ladders for trailers and vans.	176
5.6.10.1	General.	176
5.6.10.2	Accommodation.	176
5.6.10.3	Safety measures.	176
5.6.10.4	Lifting and positioning.	176
5.6.11	Cranes, materials handling, and construction.	176
5.6.11.1	General.	176

Downloaded from http://www.everyspec.com

PARAGRAPH	TITLE	PAGE
5.6.11.2	Control lever latches.	176
5.6.11.3	Control labels.	176
5.6.11.4	Control placement.	176
5.6.11.5	Foot-operated controls.	176
5.6.11.6	Load capacity.	176
5.6.11.7	Visibility.	176
5.6.11.8	Access.	176
5.6.11.9	Handholds and footholds.	176
5.6.11.10	Handling equipment.	176
5.6.11.11	Hoists.	177
5.6.11.12	Hydraulics.	177
5.7	Warnings, hazards, and safety.	179
5.7.1	General.	179
5.7.1.1	Order of precedence.	179
5.7.1.2	Provision to ensure accessible safety equipment.	179
5.7.2	Display of warnings and hazards.	179
5.7.2.1	Warning labels and placards.	179
5.7.2.2	Readability.	180
5.7.2.3	Visibility.	180
5.7.2.4	Hazards.	180
5.7.2.5	Signal word.	180
5.7.2.6	Other equipment labels.	180
5.7.2.7	Visibility and illumination.	180
5.7.3	Visual displays.	181
5.7.3.1	General.	181
5.7.3.2	Warning/caution.	181
5.7.4	Auditory warnings.	181
5.7.5	Pipe, hose, and tube line identification.	181
5.7.6	General workspace hazards.	181
5.7.6.1	Alerting device.	181
5.7.6.2	Emergency doors and exits.	182
5.7.6.3	Stairs.	182
5.7.6.4	Obstructions.	182
5.7.6.5	Overhead.	182
5.7.6.6	Storage racks.	182
5.7.6.7	Cabinet doors.	182
5.7.6.8	Illumination.	182
5.7.6.9	Thermal contact hazards.	183
5.7.7	General equipment-related hazards.	183
5.7.7.1	General.	183
5.7.7.2	Radiation.	184
5.7.7.3	Interlocks and warnings.	185
5.7.7.4	Access.	185
5.7.7.5	Hazardous access.	185
5.7.7.6	Edge rounding.	185
5.7.7.7	Safety pins and streamers.	185
5.7.7.8	Handholds/footholds.	185
5.7.7.9	Stored energy devices.	185
5.7.8	Platforms.	186
5.7.8.1	Locks.	186
5.7.8.2	Handrails, safety bars, and chains.	186
5.7.8.3	Safety mesh.	186
5.7.8.4	Weight capacity.	186
5.7.8.5	High centers of gravity.	186

Downloaded from http://www.everyspec.com

PARAGRAPH	TITLE	PAGE
5.7.9	Electrical, mechanical, fluid, toxic, and radiation hazards.	186
5.7.9.1	Electrical hazards.	186
5.7.9.2	Mechanical hazards.	191
5.7.9.3	Fluid hazards.	193
5.7.9.4	Toxic hazards.	193
5.7.9.5	Radiation.	194
5.7.10	Fire.	195
5.7.10.1	General.	195
5.7.10.2	Fire extinguishers.	195
5.7.11	Dust.	195
5.7.11.1	Dust concentration.	195
5.7.11.2	Ventilation system.	196
5.7.11.3	Personnel protection.	196
5.7.12	Mud and water.	196
5.7.13	Warnings for training system.	196
5.7.14	Safety barriers.	196
5.8	Physical accommodation.	197
5.8.1	General.	197
5.8.1.1	Systems, equipment, and facilities.	197
5.8.1.2	Clothing and personal equipment.	197
5.8.2	Target populations.	197
5.8.2.1	Regular populations.	197
5.8.2.2	Special populations.	197
5.8.2.3	Maintenance and support personnel.	197
5.8.3	Design limits.	197
5.8.3.1	General design criteria.	197
5.8.3.2	Special situations.	198
5.8.4	Anthropometric design.	198
5.8.4.1	Use of anthropometric data.	198
5.8.4.2	Whole body.	201
5.8.5	Strength.	201
5.8.5.1	Guidance.	201
5.8.5.2	Operability.	201
5.8.5.3	Break strength.	201
5.8.6	Human strength and handling capacity.	202
5.8.6.1	Exerted forces.	202
5.8.6.2	Load carrying.	202
5.8.6.3	Lifting limits, push/pull.	205
5.8.6.4	Hand trucks and wheeled dollies.	207
5.8.6.5	Push and pull forces.	207
5.9	Maintenance accessibility.	215
5.9.1	General.	215
5.9.1.1	Standardization.	215
5.9.1.2	Parts selection.	215
5.9.1.3	Tools.	215
5.9.1.4	Securing tools.	215
5.9.1.5	Grip span.	215
5.9.1.6	Modular replacement.	215
5.9.1.7	Ease of removal.	215
5.9.1.8	Separate adjustability.	215
5.9.1.9	Malfunction identification.	215
5.9.1.10	Operational environment.	215
5.9.1.11	Error-proof design.	215
5.9.1.12	Ease of access.	216

Downloaded from http://www.everyspec.com

PARAGRAPH	TITLE	PAGE
5.9.1.13	Safety.	216
5.9.1.14	Delicate items.	216
5.9.1.15	Work from ladders.	216
5.9.1.16	Maintenance of elevated structures.	216
5.9.2	Mounting of items within units.	216
5.9.2.1	General.	216
5.9.2.2	Stacking avoidance.	216
5.9.2.3	Similar items.	216
5.9.2.4	Hinge-mounted units.	216
5.9.2.5	Frames and structural members.	216
5.9.2.6	Fuses.	217
5.9.3	Adjustment controls.	217
5.9.3.1	Knob adjustments.	217
5.9.3.2	Screwdriver adjustments.	217
5.9.3.3	Reference scale for adjustment controls.	217
5.9.3.4	Control limits.	217
5.9.3.5	Critical controls.	217
5.9.3.6	Hazardous locations.	217
5.9.4	Access and accessibility.	217
5.9.4.1	Structural members.	217
5.9.4.2	Large items.	217
5.9.4.3	Use of tools and test equipment.	217
5.9.4.4	Rear access.	217
5.9.4.5	Relative accessibility.	217
5.9.4.6	High-failure-rate items.	218
5.9.4.7	Skills.	218
5.9.4.8	Workspace.	218
5.9.4.9	Access.	218
5.9.5	Lubrication.	223
5.9.5.1	General.	223
5.9.5.2	Labeling.	224
5.9.6	Case and cover mounting.	224
5.9.6.1	Location and mounts.	224
5.9.6.2	Opening or removal.	224
5.9.6.3	Interference with controls.	224
5.9.6.4	Stops and retainers.	224
5.9.6.5	Fasteners.	224
5.9.6.6	Labels and markings.	224
5.9.7	Cases.	225
5.9.7.1	Orientation.	225
5.9.7.2	Removal.	225
5.9.7.3	Size.	225
5.9.7.4	Guides.	225
5.9.8	Covers.	225
5.9.8.1	Securing of covers.	225
5.9.8.2	Instructions.	225
5.9.8.3	Ventilation holes.	225
5.9.8.4	Orientation.	225
5.9.8.5	Fasteners for covers.	225
5.9.8.6	Opening covers.	225
5.9.9	Access openings and covers.	225
5.9.9.1	Application.	225
5.9.9.2	Self-supporting covers.	225
5.9.9.3	Labeling.	225

Downloaded from http://www.everyspec.com

PARAGRAPH	TITLE	PAGE
5.9.9.4	Visual access.	226
5.9.9.5	Access cover attachment.	226
5.9.10	Fasteners.	226
5.9.10.1	General.	226
5.9.10.2	Hinges and tongue-and-slot catches.	226
5.9.10.3	Captive fasteners.	226
5.9.10.4	Quantity.	226
5.9.10.5	Latches and catches.	226
5.9.10.6	Threaded fasteners.	227
5.9.11	Unit design for efficient handling.	228
5.9.11.1	Rests and stands.	228
5.9.11.2	Extensions.	228
5.9.12	Mounting.	228
5.9.12.1	General.	228
5.9.12.2	Tools.	228
5.9.12.3	Removal.	228
5.9.12.4	Alignment.	228
5.9.12.5	Labeling and coding.	228
5.9.12.6	Rollout racks, slides, or hinges.	228
5.9.12.7	Limit stops.	229
5.9.12.8	Interlocks.	229
5.9.12.9	Hinged mounting.	229
5.9.12.10	Layout.	229
5.9.12.11	Covers or panels.	229
5.9.13	Lifting.	229
5.9.14	Conductors.	229
5.9.14.1	Coding.	229
5.9.14.2	Cable clamps.	231
5.9.14.3	Length.	231
5.9.14.4	Cable routing.	231
5.9.14.5	Access.	232
5.9.14.6	Susceptibility to abuse.	232
5.9.14.7	Identification.	232
5.9.14.8	Fluid and gas lines.	232
5.9.14.9	Aligning pins.	232
5.9.15	Connectors.	232
5.9.15.1	Use of quick-disconnect plugs.	232
5.9.15.2	Keying.	232
5.9.15.3	Identification.	232
5.9.15.4	Alignment.	233
5.9.15.5	Orientation.	233
5.9.15.6	Coding.	233
5.9.15.7	Spacing.	233
5.9.15.8	Testing and servicing.	233
5.9.15.9	Drawer modules.	234
5.9.15.10	Electronic modules.	234
5.9.15.11	Disassembly and adapters.	234
5.9.15.12	Protective covers.	234
5.9.15.13	Electrical connectors.	234
5.9.16	Test points.	234
5.9.16.1	Adjustment.	234
5.9.16.2	Troubleshooting.	234
5.9.16.3	Labeling.	234
5.9.16.4	Ease of access.	234

Downloaded from http://www.everyspec.com

PARAGRAPH	TITLE	PAGE
5.9.16.5	Labels facing technician.	234
5.9.16.6	Minimum clearance.	234
5.9.16.7	Guards and shields.	234
5.9.16.8	Isolated position.	234
5.9.16.9	Visual inspection.	234
5.9.16.10	Tool guides.	235
5.9.16.11	Functional reach.	235
5.9.16.12	Hazards.	235
5.9.17	Test equipment.	235
5.9.17.1	Storage.	235
5.9.17.2	Instructions.	235
5.9.17.3	Portable test equipment.	235
5.9.18	Failure indications and fuse requirements.	236
5.9.18.1	Indication of equipment failure.	236
5.9.18.2	Fuses and circuit breakers.	236
5.9.19	Printed circuit boards.	236
5.9.19.1	Mounting.	236
5.9.19.2	Feedback.	236
5.9.20	Stored energy devices.	236
5.9.20.1	Release or constrain energy.	236
5.9.20.2	Apparent to maintainer.	236
5.9.20.3	Inadvertent activation.	236
5.9.20.4	Labeling.	236
5.9.21	Diagnostics and troubleshooting.	237
5.9.22	Hydraulic systems.	237
5.9.22.1	Standardization.	237
5.9.22.2	Identification.	237
5.9.22.3	Drain cocks.	237
5.9.22.4	Seals.	237
5.9.22.5	Pressure relief.	237
5.9.22.6	Mechanical stops.	237
5.9.22.7	Self-sealing couplings.	237
5.9.22.8	Automatic bleeding.	237
5.10	Workspace design.	237
5.10.1	General.	237
5.10.2	Workspace provision.	237
5.10.2.1	Provision of workspace.	237
5.10.2.2	Consideration of personnel.	237
5.10.2.3	Kick space.	237
5.10.2.4	Guards.	237
5.10.2.5	Handles.	238
5.10.2.6	Flushing, draining, and venting.	238
5.10.2.7	Work space.	238
5.10.2.8	Storage space.	238
5.10.2.9	Pull space.	238
5.10.2.10	Skid layout.	238
5.10.2.11	Control/display accessibility.	238
5.10.2.12	Eliminate interference.	238
5.10.3	Workstation design.	239
5.10.3.1	Standing operations.	239
5.10.3.2	Seated operations.	243
5.10.3.3	Mobile workspace.	247
5.10.3.4	Work benches.	247
5.10.3.5	Kneeling workspaces.	254

Downloaded from http://www.everyspec.com

PARAGRAPH	TITLE	PAGE
5.10.3.6	Squatting workspaces.	257
5.10.3.7	Control surfaces.	262
5.10.4	Special-purpose console design.	263
5.10.4.1	Horizontal wraparound.	263
5.10.4.2	Vertical/stacked segments.	264
5.10.5	Illumination.	265
5.11	Physical environment design.	265
5.11.1	Stairs, ladders, ramps, platforms, catwalks, tunnels, and crawl spaces.	265
5.11.1.1	General criteria.	265
5.11.1.2	Stairs.	267
5.11.1.3	Ladders.	269
5.11.1.4	Ramps.	272
5.11.1.5	Personnel platforms and work areas.	273
5.11.1.6	Elevators, inclinators, and hydraulic-operated work platforms.	273
5.11.1.7	Catwalks, tunnels, and crawl spaces.	273
5.11.2	Passageways, ingress, and egress.	273
5.11.2.1	General.	273
5.11.2.2	Walkways and passageways.	274
5.11.2.3	Doors.	274
5.11.2.4	Hatches.	275
5.11.2.5	Whole-body access.	275
5.11.3	Surface colors.	277
5.11.3.1	Army.	277
5.11.3.2	Navy.	277
5.11.3.3	Air Force.	277
5.12	Virtual environments, remotely handled systems, automated systems, telepresence, and teleoperations.	277
5.12.1	Virtual environments (VE).	277
5.12.1.1	Task performance.	277
5.12.1.2	Mental model.	277
5.12.1.3	VE workstation design.	277
5.12.1.4	VE (simulator) sickness.	277
5.12.2	Design of equipment for remote handling.	278
5.12.2.1	Characteristics of systems to be handled remotely.	278
5.12.2.2	Feedback.	278
5.12.2.3	Warnings.	278
5.12.2.4	Manipulators.	278
5.12.2.5	Viewing equipment.	278
5.12.2.6	Illumination.	279
5.12.3	Automated systems.	279
5.12.3.1	Design requirements.	279
5.12.3.2	Unmanned aerial vehicle (UAV).	284
5.12.3.3	Unmanned ground vehicle (UGV).	285
5.12.3.4	Unmanned underwater vehicle (UUV).	286
5.12.3.5	Unmanned surface vehicle (USV).	287
5.12.4	Telepresence.	288
5.12.5	Teleoperations.	288
5.13	Small systems, equipment, and weapons.	288
5.13.1	Gunner tracking performance.	288
5.13.1.1	Gunner environment.	288
5.13.1.2	Crank size.	288
5.13.1.3	Crank speed.	288
5.13.1.4	Two-dimensional tracking.	288
5.13.1.5	Supports.	288

Downloaded from http://www.everyspec.com

PARAGRAPH	TITLE	PAGE
5.13.1.6	Compatibility.	288
5.13.2	Optical instruments and related equipment.	288
5.13.2.1	Visual accommodation.	288
5.13.2.2	Viewing angle.	288
5.13.2.3	Magnification.	288
5.13.2.4	Entrance pupil.	289
5.13.2.5	Exit pupil.	289
5.13.2.6	Eye relief.	289
5.13.2.7	Eyepiece adjustments.	289
5.13.2.8	Optical quality.	289
5.13.2.9	Non-illuminated sights and reticles.	289
5.13.2.10	Illuminated sights and reticles.	290
5.13.2.11	Binoculars/bioculars.	290
5.13.2.12	Eyecups and headrests.	290
5.13.2.13	Accessories.	291
5.13.2.14	Compatibility with clothing and equipment.	291
5.13.2.15	Lighting.	291
5.13.2.16	Maintenance.	292
5.13.3	Weapons systems.	292
5.13.3.1	Ammunition.	292
5.13.3.2	Armament.	293
5.14	Peripherals.	297
5.14.1	User authentication.	297
5.14.1.1	Log-on/off procedures.	297
5.14.2	Plotters and recorders.	297
5.14.2.1	Use.	298
5.14.2.2	Visibility.	298
5.14.2.3	Contrast.	298
5.14.2.4	Take-up device.	298
5.14.2.5	Graphic overlay.	298
5.14.2.6	Smudging/smearing.	298
5.14.2.7	Annotation.	298
5.14.2.8	Printed output location.	298
5.15	Ship and marine structure valves.	298
5.15.1	General design requirements.	298
5.15.1.1	Handle location.	298
5.15.1.2	Clearance.	298
5.15.1.3	Emergency valves.	298
5.15.1.4	Valve cover.	298
5.15.1.5	Valve closure.	298
5.15.1.6	Valve position.	298
5.15.1.7	Indicators.	298
5.15.1.8	Mechanical extenders.	298
5.15.1.9	Remote control.	298
5.15.1.10	Labeling.	298
5.15.1.11	Motorized valves.	299
5.15.1.12	Operating force.	299
5.15.1.13	Heavy valve location.	299
5.15.1.14	Clearance.	299
5.15.2	Valve criticality and location.	299
5.15.2.1	Valve criticality.	299
5.15.2.2	Location.	300
5.15.3	Handwheel-operated valves, mounting heights, and orientations.	301
5.15.3.1	One hand.	301

Downloaded from http://www.everyspec.com

PARAGRAPH	TITLE	PAGE
5.15.3.2	Two hands.	301
5.15.3.3	Mounting height.	301
5.15.3.4	Preferred location.	304
5.15.3.5	Acceptable location.	305
5.15.3.6	Handwheel diameter.	305
5.15.3.7	Handwheel surfaces.	305
5.15.3.8	Rotations.	305
5.15.4	Lever-operated valves, mounting heights, and orientations.	305
5.15.4.1	Vertical stem orientation.	305
5.15.4.2	Horizontal stem orientation.	305
5.15.4.3	Handle length.	306
5.15.4.4	Handle shape.	306
5.15.5	Alternative valve orientations.	306
5.15.5.1	Overhead valves.	306
5.15.5.2	Valves in walkways.	306
5.15.5.3	Valves accessible from one side.	306
5.15.5.4	Valves at standing surface.	307
5.15.5.5	Valves below the standing surface.	308
5.15.5.6	Deck opening sizes.	308
5.15.5.7	Valves accessible from ladders.	309
5.15.5.8	Valve manifolds.	312
6.	NOTES	314
6.1	Intended use.	314
6.2	Acquisition requirements.	314
6.3	Subject term (key word) listing.	315
6.4	Changes from previous issue.	315
6.4.1	General changes.	315
6.4.2	Technical changes.	316
6.4.2.1	Scope.	316
6.4.2.2	Applicable documents.	316
6.4.2.3	Acronyms, abbreviations, and definitions.	316
6.4.2.4	General requirements.	316
6.4.2.5	Detailed requirements.	316
A.1	SCOPE	318
A.1.1	Scope.	318
A.2	DESIGN FOR MAINTAINABILITY	318
A.3	DESIGN OF TOOLS	319
A.4	DESIGN OF MECHANICAL EQUIPMENT	320
A.5	MOUNTING AND PACKAGING	320
A.6	ELECTRONIC MODULES	321
A.7	STOWAGE OF EQUIPMENT	322
A.8	COVERS	323
A.9	FASTENERS	323
A.10	CONDUCTORS	325
A.11	TEST AND SERVICE POINTS	325
A.12	TEST EQUIPMENT	326
A.13	BATTERIES	328
B.1	SCOPE	329
B.1.1	Scope.	329

Downloaded from http://www.everyspec.com

LIST OF FIGURES

FIGURE	TITLE	PAGE
FIGURE 1.	Easily recognizable knob shapes.	20
FIGURE 2.	Lines of sight.	27
FIGURE 3.	Touch-screen.	32
FIGURE 4.	Trackballs.	36
FIGURE 5.	Displacement joysticks.	39
FIGURE 6.	Rotary selector switch.	50
FIGURE 7.	Key-operated switch (single function).	51
FIGURE 8.	Discrete thumbwheel control.	51
FIGURE 9.	Recommended knob shapes.	54
FIGURE 10.	Knobs.	55
FIGURE 11.	Ganged knobs.	56
FIGURE 12.	Continuous adjustment thumbwheel.	57
FIGURE 13.	Cranks.	58
FIGURE 14.	Push button (finger- or hand-operated).	65
FIGURE 15.	Foot-operated switches.	66
FIGURE 16.	Toggle switches.	67
FIGURE 17.	Legend switch.	68
FIGURE 18.	Rocker switches.	69
FIGURE 19.	Slide switches.	70
FIGURE 20.	Lever.	73
FIGURE 21.	Pedals.	74
FIGURE 22.	Leg strength at various knee and thigh angles (5th percentile male data).	75
FIGURE 23.	Arm, hand, and thumb-finger strength (5th percentile male data).	80
FIGURE 24.	High-torque J-handles.	81
FIGURE 25.	Vertical and horizontal visual fields.	89
FIGURE 26.	Scale marker dimensions.	103
FIGURE 27.	Scale graduation, pointer position, and scale numbering alternative.	103
FIGURE 28.	Examples of shape- and color-coding.	104
FIGURE 29.	Relative position of scale marks, numerals, and pointers on circular dials.	104
FIGURE 30.	Relative position of scale marks, numerals, and pointers on arc and straight-line scales.	105
FIGURE 31.	Orientation of labels.	132
FIGURE 32.	Label-size hierarchy.	138
FIGURE 33.	Effective temperature or corrected effective temperature.	140
FIGURE 34.	Minimum ventilation requirements.	141
FIGURE 35.	Summer and winter comfort zones and thermal tolerance for inhabited compartments.	142
FIGURE 36.	Surface reflectance values.	150
FIGURE 37.	Permissible noise exposure limits.	152
FIGURE 38.	Permissible distance between a speaker and listeners for specified voice levels and ambient noise levels.	154
FIGURE 39.	Range of acceptable reverberation time.	156
FIGURE 40.	Health guidance zones for limited exposures.	159
FIGURE 41.	Dimensions for vehicle operator's seat.	163
FIGURE 42.	Measurements for clearances around equipment.	165
FIGURE 43.	Visible seals.	178
FIGURE 44.	Connectors for fluid lines.	179
FIGURE 45	Areas to place items on a bulkhead (dimensions measured from the floor).	182
FIGURE 46.	Burn criteria for human skin.	183
FIGURE 47.	Radio frequency electromagnetic field exposure limits.	185
FIGURE 48.	Door interlock switch.	189
FIGURE 49.	Grounding methods.	190

Downloaded from http://www.everyspec.com

FIGURE 50. Cabinet grounding system. 190
FIGURE 51. Correct instrument-type fuse holder wiring. 191
FIGURE 52. Effects of incline on center of gravity location of equipment. 193
FIGURE 53. Safety barriers. 197
FIGURE 54. Range of human motion. 199
FIGURE 55. Examples of push forces. 209
FIGURE 56. Static muscle strength. 211
FIGURE 57. Minimum handle dimensions. 214
FIGURE 58. Access opening dimensions. 219
FIGURE 59. Arm and hand access dimensions. 221
FIGURE 60. Control mounting height. 241
FIGURE 61. Display mounting height. 242
FIGURE 62. Standing workspace dimensions. 243
FIGURE 63. Seated workspace dimensions. 244
FIGURE 64. Standard console dimensions. 248
FIGURE 65. Computer seated workstation dimensions. 250
FIGURE 66 . Dimensions for single or multiple personnel at a table or other duty station not requiring a desk. 252
FIGURE 67. Control mounting heights for seated personnel. 253
FIGURE 68 Display mounting heights for seated personnel. 254
FIGURE 69. Control mounting heights for kneeling personnel. 255
FIGURE 70. Display mounting heights for kneeling personnel. 256
FIGURE 71. Control mounting heights for squatting personnel. 257
FIGURE 72. Display mounting heights for squatting personnel. 258
FIGURE 73. Mobile workspace dimensions. 260
FIGURE 74. Seated optimum manual control space. 263
FIGURE 75. Wraparound seated console. 264
FIGURE 76. Example of vertical stacked segments. 265
FIGURE 77. Type of structure in relation to angle of ascent. 266
FIGURE 78. Guardrail and handrail dimensions. 267
FIGURE 79. Stair dimensions. 268
FIGURE 80. Stair-ladder dimensions. 270
FIGURE 81. Fixed-ladder dimensions. 271
FIGURE 82. Rung-ladder and ladder-cage dimensions. 272
FIGURE 83. Walkway and passageway dimensions. 274
FIGURE 84. Whole-body access opening. 276
FIGURE 85. Anatomical limits on axially symmetrical ocular metal parts. 291
FIGURE 86. Upper limits for handwheel torque. 299
FIGURE 87. Mounting heights for handwheel valves with vertical stems. 302
FIGURE 88. Mounting heights for handwheel valves with horizontal stems. 303
FIGURE 89. Mounting heights for handwheel valves with angled stems. 304
FIGURE 90. Mounting heights for lever-operated valves with vertical stems. 305
FIGURE 91. Mounting heights for lever-operated valves with horizontal stems. 306
FIGURE 92. Direction of travel for valve levers accessible from one side only. 307
FIGURE 93. Physical reach from a stooping or squatting position. 308
FIGURE 94. Mounting position for valve levers and handwheels below standing surface. 308
FIGURE 95. Orientation and reach from ladder parallel to valves. 310
FIGURE 96. Orientation and reach from ladder perpendicular to valves. 311
FIGURE 97. Operating valves from a ladder. 311
FIGURE 98. Valve manifold for tanks located athwartship. 312
FIGURE 99. Valve manifold for tanks located fore and aft. 313
FIGURE 100. Valve manifold for fill, high suction, and low suction valves. 314

FIGURE B-1. Standing body dimensions. 329
FIGURE B-2. Seated body dimensions. 333
FIGURE B-3. Depth and breadth dimensions. 337

Downloaded from http://www.everyspec.com

FIGURE B-4. Circumferences and surface dimensions. 339
FIGURE B-5. Hand and foot dimension. 342
FIGURE B-6. Head and face dimensions. 344

LIST OF TABLES

TABLE TITLE PAGE
TABLE I. Control criteria. 14
TABLE II. Recommended manual controls. 16
TABLE III. Minimum, edge-to-edge separation distances for controls. 18
TABLE IV. Advantages and disadvantages of various types of control coding. 19
TABLE V. Acceptable system response times. 24
TABLE VI. Advantages and disadvantages of touch-screen use. 30
TABLE VII. Keyboards. 33
TABLE VIII. Mouse. 34
TABLE IX. Handwheels. 59
TABLE X. Push-pull controls. 71
TABLE XI. Levers. 76
TABLE XII. Contrast ratios. 83
TABLE XIII. Control positions for full off and full on illumination. 85
TABLE XIV. Wavelength values for color discrimination. 93
TABLE XV. Common color association meanings. 93
TABLE XVI. Group viewing of optical projection displays. 110
TABLE XVII. Luminance ratio of optical projection displays. 110
TABLE XVIII. Color-coding of lights. 118
TABLE XIX. Functional evaluation of audio signals. 120
TABLE XX. Intelligibility criteria for voice communication systems. 130
TABLE XXI. Character height versus luminance and viewing distance. 136
TABLE XXII. Specific task illumination requirements. 145
TABLE XXIII. Recommendations for display luminance. 148
TABLE XXIV. Contrast ratios. 149
TABLE XXV. Recommended noise attenuation from hearing protectors. 153
TABLE XXVI. Maximum permissible noise levels for ships and maritime structures. 155
TABLE XXVII. Operational environment types. 157
TABLE XXVIII. Inertial resultant of body acceleration. 161
TABLE XXIX. Physiological effects of sustained linear acceleration. 162
TABLE XXX. Recommended clearances around vehicle operator's station to accommodate a soldier dressed in arctic clothing. 164
TABLE XXXI. Temperature exposure limits. 183
TABLE XXXII. Maximum permissible exposure (MPE) to radio frequency electromagnetic fields. 184
TABLE XXXIII. Shock current intensities and their probable effects. 186
TABLE XXXIV. Electrical currents exposure limits for all systems. 187
TABLE XXXV. Constants for predicting COHb blood content. 194
TABLE XXXVI. Range of human motion. 200
TABLE XXXVII. Typical fighting and existence loads (temperate zones). 204
TABLE XXXVIII. Maximum design weight limits. 205
TABLE XXXIX. Carrying limits for distances over 10 meters (33 feet). 206
TABLE XL. Horizontal push and pull forces exertable intermittently or for short periods of time (male personnel). 208
TABLE XLI. Static muscle strength. 210
TABLE XLII. Electrical cable coding. 230
TABLE XLIII. Hydraulic and pneumatic coding. 231
TABLE XLIV. Weight and dimension limits of portable test equipment. 235

Downloaded from http://www.everyspec.com

TABLE	TITLE	PAGE
TABLE XLV.	Maximum overhead extended and gripping reach.	240
TABLE XLVI.	Standard console dimensions.	249
TABLE XLVII.	Seated computer workstation dimensions.	251
TABLE XLVIII.	Mobile workspace dimensions.	261
TABLE XLIX.	Access opening and mounting depth dimensions for levers and handwheels mounted below the standing surface.	309
TABLE B-I.	Standing body dimensions – general forces.	330
TABLE B-II.	Standing body dimensions – Army air crew.	331
TABLE B-III.	Standing body dimensions – Air Force pilots.	332
TABLE B-IV.	Seated body dimensions – general forces.	334
TABLE B-V.	Seated body dimensions – Army air crew.	335
TABLE B-VI.	Seated body dimensions – Air Force pilots.	336
TABLE B-VII.	Depth and breadth dimensions – general forces.	337
TABLE B-VIII.	Depth and breadth dimensions – Army air crew.	338
TABLE B-IX.	Depth and breadth dimensions – Air force pilots.	338
TABLE B-X.	Circumferences and surface dimensions – general forces.	340
TABLE B-XI.	Circumferences and surface dimensions – Army air crew.	341
TABLE B-XII.	Circumferences and surface dimensions – Air Force pilots.	342
TABLE B-XIII.	Hand and foot dimensions – general forces.	343
TABLE B-XIV.	Hand and foot dimensions – Army air crew.	343
TABLE B-XV.	Hand and foot dimensions – Air Force pilots.	344
TABLE B-XVI.	Head and face dimensions – general forces.	345
TABLE B-XVII.	Head and face dimensions – Army air crew.	346
TABLE B-XVIII.	Head and face dimensions – Air Force pilots.	347

Downloaded from http://www.everyspec.com

1. SCOPE

1.1 Scope. This standard establishes general human engineering design criteria for military systems, subsystems, equipment, and facilities.

1.2 Purpose. The purpose of this standard is to present human engineering design criteria, principles, and practices to optimize system performance with full consideration of inherent human capabilities and limitations as part of the total system design trade space to more effectively integrate the human as part of the system, subsystems, equipment, and facilities to achieve mission success.

1.3 Application. This standard is applicable to the design of all systems, subsystems, equipment, and facilities, except where provisions relating to aircraft design conflict with crew system design requirements or guidelines of JSSG-2010. Unless otherwise stated in specific provisions, this standard applies to design of systems, subsystems, equipment, and facilities for use by both men and women. While this standard provides design criteria with respect to human capabilities and limitations, it is not intended to limit innovation in the design or selection of specific hardware, software, materials, and processes. This standard should be tailored by the Goverment as part of the contract. If it is not tailored by the Government, the contractor should determine any appropriate tailoring for the applicability to the system and recommend tailoring to the Government for approval.

1.4 Manufacturing tolerances. When manufacturing tolerances are not perceptible to the user, this standard will not be construed as preventing the use of components whose dimensions are within a normal manufacturing upper or lower limit tolerance of the dimensions specified herein.

2. APPLICABLE DOCUMENTS

2.1 General. The documents listed in this section are specified in sections 3, 4, or 5 of this standard. This section does not include documents cited in other sections of this standard or recommended for additional information or as examples. While every effort has been made to ensure the completeness of this list, document users are cautioned that they must meet all specified requirements of documents cited in sections 3, 4, or 5 of this standard, whether or not they are listed.

2.2 Government documents.

2.2.1 Specifications, standards, and handbooks. The following specifications, standards, and handbooks form a part of this document to the extent specified herein. Unless otherwise specified, the issues of these documents are those cited in the solicitation or contract.

FEDERAL STANDARDS

FED-STD-595	-	Colors Used in Government Procurement
FED-STD-595/11105	-	Red, Gloss
FED-STD-595/13538	-	Yellow, Gloss
FED-STD-595/14187	-	Green, Gloss
FED-STD-595/15123	-	Blue, Gloss
FED-STD-595/17038	-	Miscellaneous, Gloss
FED-STD-595/17875	-	Miscellaneous, Gloss
FED-STD-595/21105	-	Red, Semigloss
FED-STD-595/21136	-	Red, Semigloss
FED-STD-595/23538	-	Yellow, Semigloss
FED-STD-595/24300	-	Green, Semigloss
FED-STD-595/26231	-	Gray, Semigloss

Downloaded from http://www.everyspec.com

FED-STD-595/26492	-	Gray, Semigloss
FED-STD-595/26622	-	Gray, Semigloss
FED-STD-595/27038	-	Miscellaneous, Semigloss
FED-STD-595/27875	-	Miscellaneous, Semigloss
FED-STD-595/33538	-	Yellow, Flat or Lusterless
FED-STD-595/37875	-	Miscellaneous, Flat or Lusterless

DEPARTMENT OF DEFENSE SPECIFICATIONS

JSSG-2010	-	Joint Service Specification Guide for Crew Systems

(Copies of this document are available from ASC/ENRS, Bldg 28, 2145 Monahan Way, Wright-Patterson AFB OH 45433-7017 or by email, engineering.standards@wpafb.af.mil.)

MIL-DTL-3976	-	Lights, Marker, Clearance (Service and Blackout) General Specification for
MIL-DTL-7788	-	Panels, Information, Integrally Illuminated
MIL-L-85762	-	Lighting, Aircraft, Interior, Night Vision Imaging System (NVIS) Compatible

DEPARTMENT OF DEFENSE STANDARDS

MIL-STD-411	-	Aircrew Station Alerting Systems
MIL-STD-686	-	Cable and Cord, Electrical, Identification Marking and Color Coding of
MIL-STD-1474	-	Noise Limits
MIL-STD-1787	-	Aircraft Display Symbology
MIL-STD-2525	-	Common Warfighting Symbology
MIL-STD-3009	-	Lighting, Aircraft, Night Vision Imaging System (NVIS) Compatible
MIL-STD-46855	-	Human Engineering Requirements for Military Systems, Equipment, and Facilities.

DEPARTMENT OF DEFENSE HANDBOOKS

MIL-HDBK-454	-	General Guidelines for Electronic Equipment
DOD-HDBK-743	-	Anthropometry of U.S. Military Personnel (Metric)
MIL-HDBK-1473	-	Color and Marking of Army Materiel
MIL-HDBK-1908	-	Definitions of Human Factors Terms

(Copies of these documents are available online at https://assist.daps.dla.mil/quicksearch/ or https://assist.daps.dla.mil.)

2.2.2 Other Government documents, drawings, and publications. The following other Government documents, drawings, and publications form a part of this document to the extent specified herein. Unless otherwise specified, the issues of these documents are those cited in the solicitation or contract.

CODE OF FEDERAL REGULATIONS (CFR)

29 CFR 1910	-	Occupational Safety and Health Standards

Downloaded from http://www.everyspec.com

20 CFR 10	-	Standards for Protection Against Radiation
49 CFR 571.101	-	Federal Motor Vehicle Safety Standard (FMVSS) 101, Controls and Displays

(Copies of these documents are available from the Superintendent of Documents, U.S. Government Printing Office, Washington DC 20401 or online at www.gpoaccess.gov/index.html.)

DEPARTMENT OF DEFENSE ISSUANCES

DODI 6055.1	-	DoD Safety, and Occupational Health Program

(Copies of this document are available online at http://www.dtic.mil/whs/directives/.)

NATICK TECHNICAL REPORTS

TR-89/027	-	Anthropometric Survey of U.S. Army Personnel: Summary Statistics, Interim Report for 1988
TR-89/044	-	Anthropometric Survey of U.S. Army Personnel: Methods and Summary Statistics 1988
TR-99-012	-	The Effects of Multilayered Military Clothing Ensembles on Body Size: A Pilot Study

(Copies of these documents are available from the Defense Technical Information Center (DTIC), 8725 John J. Kingman Road, Fort Belvoir, VA 22060-6218 or online at http://www.dtic.mil/dtic/index.html.)

2.3 Non-Government publications. The following documents form a part of this document to the extent specified herein. Unless otherwise specified, the issues of these documents are those cited in the solicitation or contract.

AMERICAN CONFERENCE OF GOVERNMENTAL INDUSTRIAL HYGIENSTS (ACGIH)

ACGIH TLV	-	Threshold Limit Values

(Copies of this document are available from the ACGIH, 1330 Kemper Meadow Drive, Cincinnati, OH 45240 or online at http://www.acgih.org.)

AMERICAN NATIONAL STANDARDS INSTITUTE (ANSI)

ANSI S1.1	-	Acoustical Terminology
ANSI S1.4	-	American National Standard Specification for Sound Level Meters
ANSI S1.6	-	Preferred Frequencies. Frequency Levels, and Band Numbers for Acoustical Measurements
ANSI S2.70	-	Guide for the Measurement and Evaluation of Human Exposure to Vibration Transmitted to the Hand
ANSI/ASA S3.2	-	Method for Measuring the Intelligibility of Speech over Communication Systems
ANSI S3.5	-	Methods for the Calculation of the Speech Intelligibility Index
ANSI Z535.1	-	Safety Color Code
ANSI Z535.2	-	Environmental and Facility Safety Signs
ANSI Z535.4	-	Product Safety Signs and Labels

Downloaded from http://www.everyspec.com

(Copies of these documents are available from the American National Standards Institute, 25 W. 43rd St, 4th Floor, New York, NY 10036 or online at http://webstore.ansi.org/.)

ANSI/HUMAN FACTORS AND ERGONOMICS SOCIETY (HFES)

ANSI/HFES 100 - Human Factors Engineering of Computer Workstations

ANSI/HFES 200 - Human Factors Engineering of Software User Interfaces

(ANSI and HFES publish this standard jointly. Copies of these documents are available from the Human Factors and Ergonomics Society, Inc., P.O. Box 1369, Santa Monica, CA 90406-1369 or online at http://www.hfes.org or from the American National Standards Institute, 25 W. 43rd St, 4th Floor, New York, NY 10036 or online at http://webstore.ansi.org/.)

ANSI/ INTERNATIONAL ORGANIZATION FOR STANDARDIZATION (ISO)

ANSI S2.73/ISO 10819 - Mechanical Vibration and Shock – Hand-arm Vibration – Method for the Measurement and Evaluation of the Vibration Transmissibility of Gloves at the Palm of the Hand

(ANSI and International Organization for Standardization publish this standard jointly. Copies are available from the American National Standards Institute, 25 W. 43rd St, 4th Floor, New York, NY 10036 or online at http://webstore.ansi.org/ or International Organization for Standardization (ISO), 1, ch. de la Voie-Creuse, Case postale 56 CH-1211 Geneva 20, Switzerland or online at www.iso.org.)

INSTITUTE OF ELECTRICAL AND ELECTRONICS ENGINEERS, INC. (IEEE)

IEEE C95.1 - Standard for Safety Levels with Respect to Human Exposure to Radio Frequency Electromagnetic Fields, 3 kHz to 300 GHz

(Copies of this document are available from the Institute of Electrical and Electronics Engineers, Inc., 445 Hoes Lane, P.O. Box 1331, Piscataway, NJ 08855-1331 or online at www.ieee.org.)

IEEE/ASTM INTERNATIONAL

IEEE/ASTM SI 10 - Standard for Use of the International System of Units (SI): The Modern Metric System

(IEEE and ASTM International publish this standard jointly. Copies of this document are available from IEEE Service Center, 445 Hoes Lane, Piscataway, NJ 08854-1331 or online at www.ieee.org or from ASTM International, 100 Barr Harbor Drive, West Conshohocken, PA 19428-2959 or online at www.astm.org.)

INTERNATIONAL COMMISSION ON ILLUMINATION/COMMISSION INTERNATIONALE DE L'ECLAIRAGE (CIE)

ECA/EIA TEB 26 - 1976 CIE-UCS Chromaticity Diagram with Color Boundaries

(Copies of this document are available from the International Commission on Illumination, CIE Central Bureau, Kegelgasse 27, A-1030 Vienna, Austria or online at www.cie.co.at.)

INTERNATIONAL MARITIME ORGANIZATION (IMO)

IMO Assembly Resolution A.468(XII) - Code on Noise Levels on Board Ships – Annex

(Copies of this document are available from the International Maritime Organization online at http://www.imo.org/library.)

INTERNATIONAL ORGANIZATION FOR STANDARDIZATION (ISO)

ISO 2041 - Mechanical Vibration, Shock and Condition Monitoring – Vocabulary

Downloaded from http://www.everyspec.com

ISO 2631-1	-	Mechanical Vibration and Shock – Evaluation of Human Exposure to Whole-Body Vibration – Part l: General Requirements
ISO 2631-2	-	Mechanical Vibration and Shock – Evaluation of Human Exposure to Whole-Body Vibration – Part 2: Vibration in Buildings (1 to 80 Hz)
ISO 2631-5	-	Mechanical Vibration and Shock – Evaluation of Human Exposure to Whole-Body Vibration – Part 5: Method for Evaluation of Vibration Containing Multiple Shocks
ISO 5349-2	-	Mechanical Vibration - Measurement and Evaluation of Human Exposure to Hand-Transmitted Vibration – Part 2: Practical Guidance for Measurement at the Workplace
ISO 5348	-	Mechanical Vibration and Shock – Mechanical Mounting of Accelerometers
ISO 5805	-	Mechanical Vibration and Shock – Human Exposure – Vocabulary
ISO 8861	-	Engine Room Ventilation in Diesel Engine Ships – Design Requirements and Basis of Calculations
ISO 8862	-	Air Conditioning and Ventilation of Machinery Control – Rooms on Board Ships – Design Conditions and Basis of Calculations
ISO 9241-9	-	Ergonomic Requirements for Work with Visual Display Terminals (VDTs), Part 9 – Requirements for Non-Keyboard Input Devices

(Copies of these documents are available from International Organization for Standardization (ISO), 1, ch. de la Voie-Creuse, Case postale 56 CH-1211 Geneva 20, Switzerland or online at www.iso.org.)

NATIONAL FIRE PROTECTION ASSOCIATION (NFPA)

NFPA 70	-	National Electrical Code

(Copies of this document are available from NFPA, 1 Batterymarch Park, Quincy, MA 02169-7471 or online at www.nfpa.org.)

SAE INTERNATIONAL

SAE-AS18012	-	Markings for Aircrew Station Displays Design and Configuration of
SAE-AS25050	-	Colors, Aeronautical Lights and Lighting Equipment, General Requirements for
SAE-J925	-	Minimum Service Access Dimensions for Off-Road Machines
SAE-J1689	-	Hydraulic Power Units Used on Machine Tools and Equipment for the Automotive Industry

(Copies of these documents are available from SAE World Headquarters, 400 Commonwealth Drive, Warrendale, PA 15096-0001 or online at www.sae.org.)

2.4 Order of precedence. Unless otherwise noted herein or in the contract, in the event of a conflict between the text of this document and the references cited herein, the text of this document takes precedence. Nothing in this document, however, supersedes applicable laws and regulations unless a specific exemption has been obtained.

Downloaded from http://www.everyspec.com

3. DEFINITIONS

Acronyms, Abbreviations, and Definitions. Unless otherwise specified from the terms provided below, all other terms are defined in accordance with MIL-HDBK-1908.

3.1 Acronyms used in this standard. The acronyms used in this standard are defined as follows:

ACGIH	-	American Conference of Governmental Industrial Hygienists
AI	-	Articulation index
ANR	-	Active noise reduction
ANSI	-	American National Standards Institute
BIT	-	Built-in test
BITE	-	Built-in test equipment
CBR	-	Chemical, biological, and radiological
CBNRE	-	Chemical, biological, nuclear, radiological, and high-yield explosive
CET	-	Corrected effective temperature
CIE	-	International Commission on Illumination
CRT	-	Cathode ray tube
DoD	-	Department of Defense
DODI	-	Department of Defense Instruction
DVE	-	Driver's vision enhancer
EMI	-	Electromagnetic interference
EMP	-	Electromagnetic pulse
ET	-	Effective temperature
FFOV	-	Forward field of view
FMVSS	-	Federal Motor Vehicle Safety Standard
GLOC	-	G-induced loss of consciousness
HFES	-	Human Factors and Ergonomics Society
HMD	-	Helmet-mounted display
HUD	-	Head-up display
HVAC	-	Heating, ventilation, and air conditioning
IEEE	-	Institute of Electrical and Electronics Engineers
IMO	-	International Maritime Organization
ISO	-	International Organization for Standardization
KOS	-	Key-operated switch
LCD	-	Liquid crystal displays

Downloaded from http://www.everyspec.com

LED	-	Light-emitting diode
LF	-	Lift frequency
LRU	-	Lowest replaceable unit
MOPP	-	Mission-oriented protective posture
MPCD	-	Minimum perceptible color difference
MPE	-	Maximum permissible exposure
MRT	-	Modified rhyme test
NVD	-	Night vision device
NVG	-	Night vision goggle
NVIS	-	Night vision imaging system
OEM	-	On-equipment material
OSH	-	Occupational safety and health
OSHA	-	Occupational Safety and Health Administration
PC	-	Printed circuit
RFI	-	Radio frequency interference
RMS	-	Root mean square
SAE	-	Society of Automotive Engineers
SI	-	International system of units
SRP	-	Seat reference point
STC	-	Sound transmission class
STI	-	Speech transmission index
UAV	-	Unmanned Aerial Vehicle
UCI	-	User computer interface
UCS	-	Uniform color scale
UGV	-	Unmanned Ground Vehicle
USV	-	Unmanned Surface Vehicle
UUV	-	Unmanned Underwater Vehicle
VDT	-	Visual display terminal
VE	-	Virtual environment

3.2 Abbreviations used in this standard. The abbreviations used in this standard are defined as follows:

A/m	-	Amperes per meter
cd/m²	-	Candela per square meter

Downloaded from http://www.everyspec.com

D	-	Distance
dB	-	Decibel
dBA	-	Decibel on the A-weighted scale
deg	-	Degree
fc	-	Footcandle
fL	-	Footlambert
ft	-	Foot
ft/s	-	Feet per second
ft lb	-	Foot-pound
Hg	-	Mercury
Hz	-	Hertz
in	-	Inch
in lb	-	Inch-pound
kg	-	Kilogram
lb	-	Pound
m/s	-	Meters per second
min	-	Minute
mm	-	Millimeter
mrad	-	Milliradian
N	-	Newton
N m	-	Newton meter
nm	-	Nanometer
oz	-	Ounce
rpm	-	Revolutions per minute
sec	-	Second
V/m	-	Volts per meter

3.3 Definitions used in this standard. Definitions used in this standard are as follows:

3.3.1 Alarm. For the purposes of this standard, an alarm is the equivalent of a warning (see MIL-HDBK-1908 for definition of "warning").

3.3.2 Alert. For the purposes of this standard, an alert is the equivalent of a caution (see MIL-HDBK-1908 for definition of "caution").

3.3.3 Boot (accelerator operation). Minimum clearance needed to operate accelerator without brake pedal interfering.

Downloaded from http://www.everyspec.com

3.3.4 Boot (brake operation). Minimum clearance needed to operate brake pedal without accelerator interfering.

3.3.5 Central 90 percent accommodation. A design wherein 90 percent of a defined target design population will be able to use and fit the system to accomplish required physical tasks under consideration. The distribution of the 10 percent not accommodated by the design including range of adjustment of system features should be evenly split between the smaller and larger portions of the population.

When design of the system requires simultaneous accommodation on multiple measures of the population, multivariate analysis methods are required to properly determine accommodation of the central 90 percent of users. When design of the system requires only univariate accommodation, design for the central 90 percent of users is achievable by using the conventional 5th – 95th percentiles on a single dimension. However, if a univariate approach is adopted all supporting rationale shall be justified and documented.

3.3.6 Contrast ratio (CR). The ratio of the target, icon, or character luminance to the surrounding field or background luminance, i.e.,

$$CR = \frac{Lmax}{Lmin}$$

Contrast ratio is one greater than the luminance contrast, i.e., CR = C + 1. For the purposes of this standard, contrast ratio will be expressed as a ratio (e.g., 3:1).

3.3.7 Deuteranope. An individual who exhibits deuteranopia, a color vision deficiency in which the green retinal photoreceptors are absent, moderately affecting red-green hue discrimination, and thus making it difficult to distinguish between colors in the red-orange-yellow-green section of the spectrum.

3.3.8 Display frame. The outermost edges of a display that contains images.

3.3.9 Egocentric perspective. An outlook that has the tendency to perceive, understand, and interpret information in terms of the self.

3.3.10 Elbow (dynamic). Clearance required for elbow moving in all directions.

3.3.11 Elbow (static). Clearance required for elbow in still position.

3.3.12 Field of regard. All the points of the physical environment that can be perceived by a stable eye at a given moment.

3.3.13 Field of view. The area that is visible for viewing only through eye and head movement.

3.3.14 Font size to character height. Fonts are sized in “points”, which describes measure from the top of the capital letters to the bottom of lower case letters with descenders (e.g., “j” or “y”). One point is 0.35 millimeter (0.0139 inch).

3.3.15 Fuse. A protection device in an electrical circuit.

3.3.16 Fuze. An arming device for a military munition.

3.3.17 Knee width (minimum). Minimum clearance needed to accommodate both knees in a vehicle.

3.3.18 Knee width (optimum). Desired amount of clearance needed to accommodate both knees in a vehicle.

3.3.19 Level of automation.

a. Full automation (autonomous) is used when the system is able to perform the mission more effectively in a closed loop while the human maintains supervisory control.

b. Moderate automation is used for missions when the activities are best shared between automation and the human.

c. Minimal automation is used when some automation will improve mission effectiveness.

Downloaded from http://www.everyspec.com

3.3.20 Luminance contrast. The contrast between a figure (e.g., target, icon, character) and its background equals the difference between the higher luminance (Lmax) and the lower luminance (Lmin) divided by the lower luminance (Lmin), i.e.,

$$C = \frac{Lmax - Lmin}{Lmin}$$

For the purposes of this standard, luminance contrast will be expressed as a ratio (e.g., 3:1).

3.3.21 Occlusion. An obstruction that prohibits one from viewing the image that should be displayed.

3.3.22 Pedals (minimum). Amount of distance brake pedal should be from accelerator pedal.

3.3.23 Protanope. An individual who exhibits protanopia, a severe type of color vision deficiency caused by the absence of the red retinal photoreceptors affecting hue discrimination in the orange-yellow-green section of the spectrum, and in which red appears dark.

4. GENERAL REQUIREMENTS

4.1 Design objectives.

4.1.1 Work environment. Military systems, equipment, and facilities shall provide work and living environments that foster effective procedures, work patterns, and personnel safety, health, and survivability.

4.1.2 Performance degradation. Military systems, equipment, and facilities shall minimize factors that degrade human performance or increase error.

4.1.3 User capabilities. Design-induced requirements for user workload, accuracy, time constraint, cognitive processing, and communication shall not exceed user capabilities.

4.1.4 Task performance. Design shall permit accurate and efficient task performance, enabling system performance requirements to be met.

4.1.5 Personnel, training, and skill requirements. Design shall optimize personnel, training, and skill requirements within the limits of time, cost, and performance tradeoffs.

4.1.6 System manpower. Design shall optimize system manpower by identifying the minimum number of personnel required consistent with system performance requirements, human performance, workload and safety requirements, and reliability, affordability, and risk constraints.

4.2 Standardization. Controls, displays, marking, coding, labeling, and arrangement schemes (equipment and panel layout) shall be uniform for common functions of all equipment and systems.

4.3 Off-the-shelf equipment.

4.3.1 Selection. Criterion for selecting off-the-shelf commercial or Government equipment shall include the degree to which the equipment conforms to this standard.

4.3.2 Modification. Where off-the-shelf equipment requires modification in order to interface with other equipment, the modification shall be designed to comply with the criteria herein.

4.3.3 Redesign approval. Redesign of off-the-shelf equipment shall have the approval of the procuring activity.

4.4 Human engineering design.

4.4.1 Compliance. Compliance with the design criteria presented in this standard shall be included as part of a program's Human Engineering effort.

4.4.2 Program requirements. Relevant design criteria shall be embedded directly into a program's requirements documentation.

Downloaded from http://www.everyspec.com

4.4.3 Application. Criteria identified in this standard shall be applied to the design of hardware, software, systems, equipment, and facilities in which there is a human interface or interaction including operation or maintenance, training, and support activities.

4.4.4 Accommodation. Equipment, systems, and subsystems shall be designed to accommodate the central 90 percent of the anticipated user population. NOTE: The Army shall use the Anthropometric data found in NATICK TR-89/044 Anthropometric Survey of U.S. Army Personnel methods and Summary Statistics, and NATICK TR-91/040 Anthropometric Survey of U.S. Army Personnel Pilot Summary Statistics.

4.4.5 Human engineering requirements. Human engineering design requirements shall be established to develop effective human interfaces and preclude system characteristics that require extensive cognitive, physical, or sensory skills; complex manpower or training-intensive tasks; or result in frequent or critical errors.

4.4.6 Human engineering activities. Human engineering activities shall be identified and executed according to a Human Engineering Program Plan or equivalent document (e.g., human factors section of a Human Systems Integration Plan), to ensure that systems are designed to account for human capabilities and limitations. Specific human factors analyses and activities are outlined in MIL-STD-46855.

4.4.7 Design factors. Design shall reflect human engineering, life support, and biomedical factors that affect human performance, including, when applicable:

a. Satisfactory atmospheric conditions including composition, pressure, temperature, and humidity, including safeguards against uncontrolled variability beyond acceptable limits.

b. Range of acoustic noise, vibration, acceleration, shock, blast, and impact forces and safeguards against uncontrolled variability beyond safe limits.

c. Protection from thermal, biological, toxicological/chemical, radiological/nuclear, mechanical, electrical, electromagnetic, pyrotechnic, and other hazards.

d. Adequate space for personnel, their equipment, and free volume for the movements and activities they are required to perform during operation and maintenance tasks under normal, adverse, and emergency conditions.

e. Adequate physical, visual, auditory, and other communication links between personnel, and between personnel and their equipment, under normal, adverse, and emergency conditions.

f. Efficient arrangement of operation and maintenance workplaces, equipment, controls, and displays.

g. Provisions for ensuring safe, efficient task performance under reduced and elevated gravitational forces with safeguards against injury, equipment damage, and disorientation.

h. Adequate natural or artificial illumination for the performance of operation, control, training, and maintenance.

i. Safe and adequate passageways, hatches, ladders, stairways, platforms, inclines, and other provisions for ingress, egress, and passage under normal, adverse, and emergency conditions.

j. Provision of acceptable personnel accommodations including body support and restraint, seating, rest, and sustenance, i.e., oxygen, food, water, and waste management.

k. Provision of nonrestrictive personal life support and protective equipment.

l. Provisions for minimizing psycho-physiological stress effects of mission duration and fatigue under normal, adverse, and emergency conditions.

m. Design features to assure rapidity, safety, ease and economy of operation, and maintenance in normal, adverse, and emergency maintenance environments.

n. Satisfactory remote handling provisions and tools.

o. Adequate emergency systems for contingency management, escape, survival, and rescue.

p. Compatibility of the design, location, and layout of controls, displays, workspaces, maintenance accesses, stowage provisions, passenger compartments, allocated tasks, and control movements with the clothing and personal equipment to be worn by personnel operating, riding in, or maintaining military systems or equipment.

q. Design of work stations shall be considered in all human-system interactions for mobile operations.

Downloaded from http://www.everyspec.com

4.5 Fail-safe design. A fail-safe design shall be provided in those areas where failure can cause catastrophe through damage to equipment, injury to personnel, or inadvertent operation of critical equipment.

4.6 Simplicity of design.

4.6.1 Equipment simplicity. The equipment shall represent the simplest design consistent with functional requirements and expected operational conditions.

4.6.2 Training. The equipment shall be capable of being operated and maintained in its operational environment by personnel with a minimum of training.

4.7 Interaction. The design of the system shall reflect the interaction requirements of crew-served equipment.

4.8 Safety.

4.8.1 System and personnel safety factors. Design shall reflect applicable system and personnel safety factors, including minimizing potential human error in the operation and maintenance of the system, particularly under the conditions of alert, battle stress, or other emergency or non-routine conditions.

4.8.2 Design of nonmilitary-unique workplaces and equipment. Design of nonmilitary-unique workplaces and equipment shall conform to Occupational Safety and Health Administration (OSHA) standards unless military applications require more stringent limits (e.g., maximum steady-state noise in personnel-occupied areas).

4.9 Ruggedness. Systems and equipment shall be sufficiently rugged to withstand handling in the field during operation, maintenance, supply, and transport within the environmental limits specified for those conditions in the applicable hardware or system specification.

4.10 Chemical, biological, radiological, nuclear, and high-yield explosive (CBRNE) survivability.

4.10.1 CBRNE compatibility. As applicable, equipment design shall be compatible with CBRNE protection.

4.10.2 Performance of mission-essential operations. Equipment design shall permit performance of mission-essential operations, communications, maintenance, resupply, and decontamination tasks by suitably clothed, trained, and acclimatized personnel for the survival periods and CBRNE environments required by the system.

4.10.3 Susceptibility to reduction of inherent CBRNE hardness. Equipment design shall minimize susceptibility to reduction of inherent CBRNE hardness as a result of operator- or maintainer-induced errors or damage.

4.10.3.1 CBRNE hardness verification. CBRNE hardness shall be easily verifiable by maintenance personnel and after maintenance actions (hardness surveillance).

4.10.3.2 CBRNE hardness and maintenance. CBRNE hardness shall not be degraded when routine (scheduled) and corrective (unscheduled) maintenance is performed.

4.10.4 CBRNE hardness and maintenance personnel expertise. Maintenance of the equipment's inherent CBRNE hardness shall not be dependent on maintenance personnel expertise and critical alignments and maintenance actions.

4.11 Electromagnetic pulse hardening.

4.11.1 Electromagnetic pulse hardening requirements. As applicable, equipment design shall be compatible with electromagnetic pulse (EMP) hardening requirements, including personal accommodations such as EMP-hardened electrical power outlets and antenna lead-ins within EMP-hardened facilities or spaces.

4.11.2 Access to EMP-hardened facilities. Access shall be provided to EMP-hardened facilities or spaces without compromising the electromagnetic barrier protecting the space.

4.11.3 Electromagnetic barrier accessibility. Items such as surge arrestors, terminal protection devices, and filters, which form part of an electromagnetic barrier for protection against EMP effects, shall be readily accessible.

Downloaded from http://www.everyspec.com

4.12 Automation.

4.12.1 Automation of functions. Functions shall be automated only to attain greater overall effectiveness, efficiency, reliability, simplicity, economy, and system safety rather than relying on human performance alone.

4.12.2 Human involvement. Irrespective of the level of automation, system and task design shall ensure that the human user is in command, involved in ongoing operations, and appropriately informed to maintain awareness of the situation and other status of automated functions.

4.12.3 Automated function characteristics. When used, automated functions shall be predictable, offer the user an appropriate range of options, monitor user actions to minimize, resist, and tolerate errors, and be capable of being overridden by the user in an emergency.

4.12.4 Indication of operating mode. A clear indication of the current operating mode selected shall be provided to the user at all times.

4.13 Functional use of color. Where not in conflict with color codes specified herein, colors used for functional purposes (e.g., visual displays, controls, workspaces, equipment connections), shall accommodate users with color deficient vision.

4.14 Design of aircrew systems. Aircrew systems shall be designed as specified by the contract. Refer to JSSG-2010 for further guidance. Additional aircrew system design guidance can be found in MIL-DTL-7788.

4.15 System integration. The design shall be compatible with all systems the user is expected to operate, maintain, or support.

4.16 Recycled, recovered, or environmentally preferable materials. Recycled, recovered, or environmentally preferable materials shall be used to the maximum extent possible, provided that the material meets or exceeds the operational and maintenance requirements, and promotes economically advantageous life cycle costs.

5. DETAILED REQUIREMENTS

5.1 Controls.

5.1.1 General criteria.

5.1.1.1 Selection. Criteria in table I shall be used in determining the type of control to be used on control panels. In addition, 5.1.1 shall be consulted prior to control selection. Table II shows recommended controls in relation to control function and actuation force required.

Downloaded from http://www.everyspec.com

TABLE I. Control criteria.

Function	Control									
	Selector Switch	Round Knob	Discrete Thumb Wheel	Cont. Thumb Wheel	Crank	Push Button	Toggle Switch	Rocker Switch	Lever	Joystick, Lever, Ball, Mouse
Select power state ON-OFF	3					1	2	2	la	
3-state (OFF-STBY-ON)	1	2					2	3		
Select between OFF/Prime Mode/Secondary Mode(s)	1					2	3	3	la	
Select one or more of N-related functions						1	2	2		
Select one of N mutually exclusive functions of any order						1				
Select one of 3 to 24 discrete alternatives – sequential order	1									
Select digit – discrete	2b		2b			lc				
Set value on – continuous scale		1		2	3				3	
Select value in – discrete steps	1		1			1				
Select operating condition	2					1	1	1	2	
Enter alphanumeric data						lc				
Initiate test subfunction (momentary)	3					1	1	2		
Initiate directional function	3			3		2d	1	1d	1	2
Generate stepping impulse (momentary hold)						1	1	2		
Slew counters or other numeric readout		le			1f	1	1			
Reset mechanical counter, manual		1	3	1						
Interrupt sequence, “hold”						1	2	2		
Engage – disengage mechanical function									1	
Adjust light level, continuous		1	3	1				2	3	
Adjust sound level, continuous		1	3	1				2	3	
Coarse adjustment		1g		2h	2i				2j	2
Fine adjustment		lk		2l	2m				3n	2
Adjust to null position		1		2	3				3	2

Downloaded from http://www.everyspec.com

TABLE I. Control criteria – Continued.

Function	Control									
	Selector Switch	**Round Knob**	**Discrete Thumb Wheel**	**Cont. Thumb Wheel**	**Crank**	**Push Button**	**Toggle Switch**	**Rocker Switch**	**Lever**	**Joystick, Lever, Ball, Mouse**
Single-coordinate tracking		3			2				1	
Two-coordinate tracking					3					1

NOTES:

1 = most preferred 2 = secondary preference 3 = least preferred

a – Lever for heavy duty power circuits
b – Only if sequential selection is acceptable
c – Keyboard
d – Multiple controls
e – Rate control
f – Manual only
g – Small diameter
h – Small motion
i – Few turns
j – Short throw
k – Large diameter
l – Large motion
m – Many turns
n – Long throw

Downloaded from http://www.everyspec.com

TABLE II. Recommended manual controls.

Control Function	Control Type
Small actuation force required:	
2 discrete positions	Keylock Legend switch Push button Slide switch Toggle switch
3 discrete positions	Push button Rotary selector switch Toggle switch
4 to 24 discrete positions	Rotary selector switch
Continuous setting (linear and less than 360 degrees)	Continuous rotary knob Joystick or lever
Continuous slewing and fine adjustment	Continuous rotary knob Crank Joystick or lever
Large actuation force required:	
2 discrete positions	Detent lever Foot push button Hand push button
3 to 24 discrete positions	Detent lever Rotary selector switch
Continuous setting (linear and less than 360 degrees)	Crank Handwheel Joystick or lever Two-axis grip handle
Continuous setting (more than 360 degrees)	Crank Handwheel Two-axis grip handle Valve

Downloaded from http://www.everyspec.com

5.1.1.1.1 Compatibility with users.

a. Accommodation of user population. The type of control selected and the location of the motion envelopes shall assure that suitably clothed and suitably equipped user personnel within the central 90 percent of the anticipated user population for body dimensions for thre-dimensional design elements (such as crew workspace) are accomodated. Fifth percentile strength values and 5th or 95th percentile physical dimension values shall be used for two-dimensional design elements (see figures 23, 22, and B.1).

b. Handedness accommodation. Equipment design shall accommodate both right- and left-handed users when possible.

c. Handedness accommodation for majority of user population. If constraints permit only one group of users (right- or left-handed) to be accommodated, the majority of the user population shall receive priority.

5.1.1.1.2 Distribution of workload. Controls shall be selected and distributed so that none of the user's limbs will be overburdened.

5.1.1.1.3 Multirotation controls. Multirotation controls shall be used when precision is required over a wide range of adjustment.

5.1.1.1.4 Detent controls. Detent controls shall be selected whenever the operational mode requires control operation in discrete steps.

5.1.1.1.5 Stops. Stops shall be provided at the beginning and end of the range of control positions if the control is not to be operated beyond the indicated end positions or specified limits.

5.1.1.1.6 Power assist. Power assist may be used to reduce the magnitude of force inputs required to adjust or actuate controls. When servo-amplifier devices are used, appropriate proportional resistance or force feedback shall be provided to give the user the feel of unpowered control.

5.1.1.2 Direction of movement.

5.1.1.2.1 Consistency of movement. Direction of control movement shall be consistent with the related movement of an associated display, equipment component, or vehicle. In general, movement of a control forward, clockwise, to the right, up, or pressing a control, shall turn the equipment or component on, cause the quantity to increase, or cause the equipment or component to move forward, clockwise, to the right, or up. Valve controls are excluded (see 5.1.1.2.4).

5.1.1.2.2 Multidimensional operation. When the vehicle, equipment, or components may move in more than two dimensions, an exception to 5.1.1.2.1 shall be made if necessary to ensure consistency of anticipated response (e.g., forward motion of a directional control causes some vehicles to dive or otherwise descend rather than to simply move forward). When several controls are combined in one device, responses shall be compatible with control movement (e.g., control motion to the right is compatible with clockwise roll, right turn, and direct movement to the right).

5.1.1.2.3 User-control orientation. Controls shall be oriented with respect to the user. Where a vehicle user may use two or more stations, the controls shall cause movement oriented to the user at the effecting station, unless remote visual reference is used.

5.1.1.2.4 Valve controls. Rotary valve controls shall open the valve with a counterclockwise motion. Valve controls shall be provided with double-ended arrows showing the direction of operations and labeled at each end to indicate the functional result (e.g., open and close).

Downloaded from http://www.everyspec.com

5.1.1.3 Grouping and arrangement.

5.1.1.3.1 Grouping. Controls which are operated in a task-driven sequence or which are operated together shall be grouped together along with their associated displays. When several steps of a sequence are selected by one control, the steps shall be arranged by order of occurrence to minimize control movements and prevent cycling through unnecessary steps. Unecessary cycling through the control's ON/OFF position shall be avoided.

5.1.1.3.2 Sequential operation. Where sequential operations follow a fixed pattern, controls shall be arranged to facilitate operation (e.g., a left-to-right/top-to-bottom pattern, as on a printed page).

5.1.1.3.3 Location of primary controls. The most important and frequently used controls (particularly rotary controls and those requiring fine settings) shall have the most favorable position for ease of reaching and grasping.

5.1.1.3.4 Consistency. The arrangement of functionally similar, or identical, primary controls shall be consistent from panel to panel throughout the system, equipment, or vehicle, and other systems expected to be operated by the user (e.g., a movement of a control to the right or left shall result in a corresponding movement of a displayed element to the right or left).

5.1.1.3.5 Remote controls. Controls, operated at a position remote from the display, equipment, or controlled vehicle, shall be arranged to facilitate direction-of-movement consistency.

5.1.1.3.6 Maintenance and adjustment. In general, controls used solely for maintenance and adjustment shall be covered during normal equipment operation, but readily accessible and visible when required.

5.1.1.3.7 Spacing. Minimum spacing between controls shall comply with table III. Spacing between a control and any adjacent obstruction shall be as shown by the figures referenced by table III. Minimum spacing shown shall be increased for operation with gloves, mittens, or CBRNE-protective handwear, when such operation is a system requirement.

TABLE III. Minimum, edge-to-edge separation distances for controls. [1/]

	Toggle Switches	**Push buttons [2/]**	**Continuous Rotary Controls**	**Rotary Selector Switches**	**Discrete Thumbwheel Controls**
Toggle Switches	See figure 16	13 mm (0.5 in)	19 mm (0.75 in)	19 mm (0.75 in)	13 mm (0.5 in)
Push Buttons [2/]	13 mm (0.5 in)	See figure 14	13 mm (0.5 in)	13 mm (0.5 in)	13 mm (0.5 in)
Continuous Rotary Controls	19 mm (0.75 in)	13 mm (0.5in)	See figure 12	25 mm (1 in)	19 mm (0.75 in)
Rotary Selector Switches	19 mm (0.75 in)	13 mm (0.5 in)	25 mm (1.0 in)	See figure 6	19 mm (0.75 in)
Discrete Thumbwheel Controls	13 mm (0.5 in)	13 mm (0.5 in)	19 mm (0.75 in)	19 mm (0.75 in)	See figure 8

NOTES:

[1/] All values are for one-hand operation. All values are for bare-handed operation.

[2/] For push buttons not separated by barriers.

5.1.1.3.8 Control interference. The size, shape, and location of controls shall be designed to ensure that the operation of any one control does not interfere with the user's ability to use other controls and to perform other duties.

5.1.1.3.9 Emergency shutoff controls. Emergency shutoff controls shall be accessible, not hidden, located to prevent accidental activation, and positioned within easy reach of the user (see 5.1.1.7 and 5.1.1.8).

Downloaded from http://www.everyspec.com

5.1.1.4 Coding.

5.1.1.4.1 Methods and requirements. The use of a coding mode (e.g., size and color) for a particular application shall be governed by the relative advantages and disadvantages of each type of coding (see table IV). Where coding is used to differentiate among controls, application of the code shall be uniform throughout the system and other systems expected to be operated by the user.

TABLE IV. Advantages and disadvantages of various types of control coding.

Advantages	**Type of Coding**					
	Location	**Shape**	**Size**	**Mode of operation**	**Labeling**	**Color**
Improves visual identification	X	X	X		X	X
Improves nonvisual identification (tactile and kinesthetic)	X	X	X	X		
Helps standardization	X	X	X	X	X	X
Aids identification under low levels of illumination and colored lighting	X	X	X	X	(When trans-illuminated)	(When trans-illuminated)
May aid in identifying control position (settings)		X		X	X	X
Requires little (if any) training; is not subject to forgetting					X	
Disadvantages						
May require extra space	X	X	X	X	X	
Affects manipulation of the control (ease of use)	X	X	X	X		
Limited in number of available coding categories	X	X	X	X		X
May be less effective if user wears gloves		X	X	X		
Controls must be viewed (i.e., must be within visual areas and adequately illuminated)					X	X

5.1.1.4.2 Location-coding. When controls are beside (or behind) the user, they shall be a minimum of 250 millimeters (10 inches) apart for location coding. Controls associated with similar functions shall be in the same relative location from work station to work station and from panel to panel and other systems expected to be operated by the user.

5.1.1.4.3 Size-coding. No more than three different sizes shall be used to code controls for discrimination by absolute size. Controls used for performing the same function on different items of equipment shall be the same size. When knob diameter is used as the coding parameter, the differences between diameters shall be not less than 13 millimeters (0.5 inch). When knob thickness is the coding parameter, the differences between thicknesses shall be not less than 10 millimeters (0.4 inch).

5.1.1.4.4 Shape-coding. Shape-coding designs shall meet the following:

a. Shape-coding use. Shape-coding may be used to ensure identification of control knobs or handles by “feel” where visual identification is not possible, diversion of user visual attention to identify the proper control would detract from mission accomplishment, or where the consequences of incorrect control selection would be severe. When shape-coding is used:

(1) The coded feature shall not interfere with ease of control manipulation.

Downloaded from http://www.everyspec.com

(2) Shapes shall be identifiable by hand and by eye regardless of the position and orientation of the control knob or handle.

(3) Shapes shall be tactually identifiable when gloves must be worn.

(4) The number of shapes to be identified by each user based on absolute discrimination shall be not more than 10.

(5) Shape-coded knobs and handles shall be positively and non-reversibly attached to their shafts to preclude incorrect attachment when replacement is required.

(6) For knobs that must be recognized by touch alone, easily recognizable knob shapes shall be used (see figure 1).

(7) Shapes shall be associated with or resemble the control function, and not alternate functions.

b. Control dimensions. Minimum control dimensions when users shall distinguish controls by shape alone shall be as follows:

(1) Height: 13 millimeters (0.5 inch) or larger.

(2) Width: 13 millimeters (0.5 inch) or larger.

(3) Depth: 6.5 millimeters (0.25 inch) or larger.

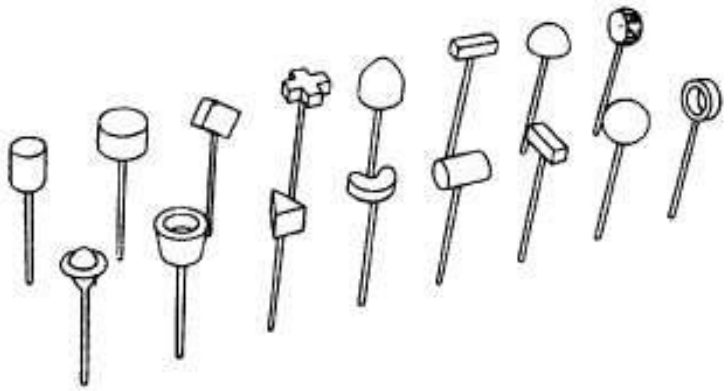

FIGURE 1. Easily recognizable knob shapes.

5.1.1.4.5 Color-coding. Colors shall not be the sole means to control coding. Not more than five colors shall be used.

a. Choice of colors. Controls shall be black, in accordance with FED-STD-595/17038, FED-STD-595/27038, or FED-STD-595/37038, or gray, in accordance with FED-STD-595/26231 or FED-STD-595/36231. If color-coding is required, only the following colors identified in FED-STD-595 shall be selected for control coding.

(1) Red: 11105 and 21105

(2) Green: 14187

(3) Orange-Yellow: 13538, 23538, 33538

(4) White: 17875, 27875, 37875

(5) Blue: 15123 shall be used if an additional color is absolutely necessary.

Where specular reflection (glare) or reduced friction could degrade task performance, gloss finishes (10000 series in FED-STD-595) shall not be used on controls. Gloss finishes shall not be used in areas subject to darkened conditions for night operations.

b. Immediate action controls. Color-coding of immediate action controls for aircraft shall be in accordance with SAE-AS18012.

Downloaded from http://www.everyspec.com

c. Relation to display. When color-coding must be used to relate a control to its corresponding display, the same color shall be used for both the control and the display.

d. Control to background contrast. Sufficient color/brightness contrast between the control and its background shall be provided to ensure prompt and accurate identification by the user.

e. Ambient lighting and color-coding exclusion. Color-coding shall be compatible with anticipated ambient light during the mission. Color-coding shall not be used as the primary identification medium if the spectral characteristics of such ambient light or the user's adaptation to that light varies as the result of such factors as solar glare, filtration of light, and variation from natural to artificial light. If red lighting is to be used during a portion of the mission, controls that would otherwise be coded red shall be coded by orange-yellow and black striping in accordance with FED-STD-595.

5.1.1.5 Labeling of controls. Control labeling shall be in accordance with 5.4.

5.1.1.6 Compatibility with handwear. Controls shall be compatible with handwear to be utilized in the anticipated environment. Unless specified for glove use (see 6.2), all dimensions cited herein are for bare hands and shall be adjusted for use with gloves or mittens.

5.1.1.7 Blind operation. Where “blind” operation is necessary, hand controls shall be shape-coded, or separated from adjacent controls by at least 125 millimeters (5.0 inches) (see 5.1.1.4.2 and 5.1.1.4.4).

5.1.1.8 Prevention of accidental actuation.

5.1.1.8.1 Location and design. Controls shall be designed and located so that they are not susceptible to being moved accidentally or inadvertently, particularly critical controls where such operation might cause equipment damage, personnel injury, system performance degradation, or system shutdown of mission critical equipment where a reboot period is necessary to restart the equipment.

5.1.1.8.2 Internal controls. Internal or hidden controls shall be protected from inadvertent actuation or movement.

5.1.1.8.3 Rapid operation. Any method of protecting a control from inadvertent operation shall not preclude operation within the time required.

5.1.1.8.4 Methods. If a control must be protected from accidental actuation, one or more of the following methods shall be used:

a. Locate and orient the control so that the user is not likely to strike or move it accidentally in the normal sequence of control movements.

b. Recess, shield, or otherwise surround the control by physical barriers. The control shall be entirely contained within the recess or barrier envelope.

c. Cover or guard the control. Safety or lock wire shall not be used.

d. Interlock the control so that extra movement (e.g., a side movement out of a detent position or a pull-to-engage clutch) or the prior operation of a related or locking control is required.

e. Provide the control with movement resistance (e.g., viscous or coulomb friction, spring-loading, or inertia) so that definite or sustained effort is required for actuation.

f. Lock the control to prevent its quickly passing through a position when strict sequential activation is necessary (i.e., the control is moved only to the next position, then delayed).

g. Design the control for operation by rotary action.

5.1.1.8.5 Weapon control/actuation. The weapon (or directed energy) fire trigger (or switch) shall be clearly labeled for the intended function and shall be physically protected to prevent accidental activation. The trigger (or switch) shall be a guarded positive action (“dead man”) type control requiring continuous user intent to maintain activation.

Downloaded from http://www.everyspec.com

5.1.1.8.6 Dead man controls. Dead man controls, which will result in system shutdown to a noncritical operating state when force or input is removed, shall be utilized wherever user incapacity can produce a critical system condition.

5.1.1.8.7 Foot-operated controls. See pedals (5.1.4.2.1b).

a. Use. Foot-operated controls may be used under any of the following conditions:

(1) Control operation requires either greater force than the upper body can provide or force close to an upper body fatigue threshold.

(2) The user's hands are generally occupied by other manual control tasks at the same moment that an additional control action is required.

(3) Specific foot-operated controls have been so well established that the user expects such operating functions to be performed using foot controls (e.g., aircraft rudder/brake pedals, automotive clutch, brake, aircraft floor mike switches, and accelerator pedals).

(4) A safety "shutdown" control is required during an operation in which the user's hands cannot be freed to reach a safety switch.

[NOTE: This list is not comprehensive.]

b. Avoidance. Foot-operated controls shall not be used in any of the following conditions:

(1) A standing user is confronted with a sensitive balancing requirement (e.g., a moving platform where balancing on the non-operating foot may become difficult as the operating foot is moved from a support to actuating position).

(2) Precise control operations are required.

(3) Selection from among many separate controls is required.

c. Operation. Foot controls shall be located and designed so they can be operated with natural user movements.

d. Foot control actions to avoid. Foot controls shall not require the user to do any of the following:

(1) Perform frequent, maximum reaching.

(2) Operate a control frequently or for an extended period of time while sitting in a twisted position (i.e., pedals shall be laid out symmetrically with reference to the user's principal operating orientation).

(3) Search for a particular foot control in order to select the proper one.

(4) Use a foot control located where it might be stepped on and inadvertently actuated.

(5) Shift the foot from one control to another when the foot or clothing might be entrapped by an intervening control.

e. Configuration and placement. The following shall be considered in regards to configuration and placement of foot-operated controls:

(1) Configuration and placement of foot-operated controls shall accommodate the footwear for the user population.

(2) Each foot-operated control shall be located so that actuating it by one foot does not interfere with actuating a control by the other foot.

(3) Each foot-operated control shall be located so foot and leg movements are natural and easily accomplished within the work station where the foot controls are located.

5.1.1.9 Feedback. There shall be no discernible time lag between a change in a system condition being controlled or monitored and its indication on a display. If a time lag between control actuation and ultimate system state is unavoidable, the system shall provide immediate feedback to the user of the process and direction of parameter change. Feedback shall indicate (without ambiguity, uncertainty, or error) to the user that the control is properly actuated, that the desired response is achieved, and when the desired response is complete. Critical control functions, such as those entered by keyboard, shall provide feedback to the user prior to entry to ensure that the keyed entry is errorless and is the one that the user desires to enter.

Downloaded from http://www.everyspec.com

5.1.1.10 Hazardous operations.

5.1.1.10.1 Interlocks and warnings. Where practical, the critical position of a control that initiates hazardous operations (e.g., ignition, crane movement) shall activate visible and audible warning signals in the affected work area.

5.1.1.10.2 Consistency of use. A control used for a critical/emergency use function shall be dedicated to that function only.

5.1.2 Control/display integration.

5.1.2.1 General criteria.

5.1.2.1.1 Relationship and location. The relationships of a control to its associated display and the display to the control shall be immediately apparent and unambiguous to the user. A control shall be located adjacent to (normally below or to the right of) its associated display and positioned so that neither the control nor the hand normally used for setting the control will obscure the display.

5.1.2.1.2 Design. Control-display relationships shall be apparent through proximity, similarity of groupings, coding, framing, labeling, and similar techniques.

5.1.2.1.3 Complexity and precision. The complexity and precision required for manipulating controls and monitoring displays shall be consistent with the precision required of the system. Control-display complexity and precision shall not exceed the user's capability to discriminate display detail or manipulate controls (in terms of manual dexterity, coordination, or reaction time) under the dynamic conditions and environment in which human performance is expected to occur.

5.1.2.1.4 Feedback.

a. Use. Feedback shall be provided which presents status information, confirmation, and verification of input throughout system interaction.

b. System-status. Users shall be provided at all times with system-status information regarding operational modes and availability, either automatically or by request as needed.

c. Computer response. Every input by a user shall produce a consistent, perceptible response output from the computer. In applications where the system intentionally produces no visual feedback as an indicator of invalid user input, an alternative form of feedback (e.g., different audio sound) shall be produced to ensure the invalid action is recognized by the user.

d. System response time. Maximum system response times for real-time systems (e.g., fire control systems, command, and control systems) shall not exceed the values of table V. Non-real-time systems may permit relaxed response times. System response times for real-time and non-real-time systems shall not exceed the response time of the equivalent existing or predecessor system. If computer response time will exceed 1.0 second, the user shall be given a message indicating that the system is processing (for remotely handled automated systems, see 5.12).

e. Task performance time. The time required to accurately complete a standard time sensitive action or sequence of actions (including system response time) shall not exceed the time to complete the same action(s) on the equivalent existing or predecessor system.

f. Time-consuming processes. The system shall give warning information when a command is invoked which will be time consuming or resource-intensive to process.

g. Aborting time-consuming processes. Users shall be provided with an option to abort time-consuming processes.

h. Stand-by. When system functioning requires the user to stand by, a message or appropriate icon shall be displayed until user interaction is again possible. Where the delay exceeds 1.0 second, the user shall be informed. For delays exceeding 10 seconds, a count-down display shall show delay time remaining.

Downloaded from http://www.everyspec.com

i. Startup. When the system is not immediately available after system startup, the system shall provide feedback to the user, indicating average system response time or known periods of unavailability, and disable the keyboard and pointing device until startup is complete. The shape of the pointing device display shall be altered to indicate that it is disabled. When startup is complete and the system becomes available, the system shall remove any messages indicating that it is unavailable, return the pointer to its normal shape, and enable the keyboard and pointing device.

j. Input confirmation. Confirmation shall not cause displayed data removal.

k. User input rejection. If the system rejects a user input, feedback shall be provided to indicate the reason for rejection and the required corrective action.

l. Highlighted option selection. Any displayed message or datum selected as an option or input to the system shall be highlighted to indicate acknowledgment by the system.

m. Process outcome. When a control process or sequence is completed or aborted by the system, positive indication shall be presented to the user concerning the outcome of the process and the requirements for subsequent user action.

n. Feedback message content. Users shall not be required to translate feedback messages by use of reference system or code sheets. Abbreviations shall be avoided in feedback messages.

TABLE V. Acceptable system response times.

System Interpretation	Response Time Definition	Time (seconds)
Key response	Key depression until positive response, e.g., “click”	0.1
Key print	Key depression until appearance of character	0.2
Page turn	End of request until first few lines are visible	1.0
Page scan	End of request until text begins to scroll	0.5
XY entry	From selection of field until visual verification	0.2
Pointing	From input of point to display point	0.2
Sketching	From input of point to display of line	0.2
Local update	Change to image using local data base, e.g., new menu list from display buffer	0.5
Host update	Change where data is at host in readily accessible form, e.g., a scale change of existing image	2.0
File update	Image update requires an access to a host file	10
Inquiry (simple)	From command until display of a commonly used message	2.0
Inquiry (complex)	Response message requires seldom used calculations in graphic form	10
Error feedback	From entry of input until error message appears	0.2

5.1.2.1.5 Error management.

a. Error correction. Where users are required to make entries into a system, an easy means shall be provided for correcting erroneous entries. The system shall permit correction of individual errors without requiring reentry of correctly entered commands or data elements.

b. Early detection. A capability shall be provided to facilitate detection and correction of errors after keying in, but before entering into the system. Error checking shall occur at logical data entry breaks, such as at the end of data fields rather than character-by-character, in order to avoid disrupting the user.

c. Internal software checks. Software shall check user entries for validity of item, sequence of entry, completeness of entry, and range of value.

Downloaded from http://www.everyspec.com

d. Critical entries. The system shall require the user to acknowledge critical entries prior to their being implemented by the system.

e. Error message content. Error messages shall describe a way to remedy, recover, or escape from the error situation. Following the output of a simple error message, users shall be permitted to request a more detailed discussion of the error. Error feedback shall be provided within 0.2 seconds of the entry in which error is detected. Error messages shall be constructive and neutral in tone, avoiding phrases that suggest a judgment of the user's behavior. The error messages shall reflect the user's view, not that of the programmer. Error messages shall be appropriate to the user's level of training and be as specific as possible to the user's particular application.

f. Error recovery and process change (multi-level "undo"). The user shall be able to (a) stop the control process at any point in a sequence as a result of indicated error or as an option and (b) return easily to previous levels in multi-step processes in order to nullify an error or to affect a desired change.

g. Diagnostic information. Error messages shall explicitly provide as much diagnostic information and remedial direction as can be inferred reliably from the error condition.

h. Correction entry and confirmation. When the user enters correction of an error, such corrections shall be implemented by an explicit action by the user (e.g., actuation of an ENTER key). All error corrections by the user shall be acknowledged by the system, either by indicating that a correct entry has been made or by another error message.

i. Spelling errors. Spelling and other common errors shall not produce valid system commands or initiate transactions different from those intended. The system shall recognize common misspellings of commands by informing the user of the unrecognized entry and providing a similar correct entry for revision and approval by the user. Computer-corrected commands, values, and spellings shall be displayed and highlighted for user confirmation.

j. Errors in stacked commands. To prompt for corrections of an error in stacked commands, the system shall display the stacked sequence with the error highlighted. Where possible, a procedure shall be provided to correct the error and salvage the stack.

k. Display of erroneous entries. A computer-detected error, as well as the error message, shall be continuously displayed until the error is corrected.

5.1.2.1.6 Illumination. Adjustable illumination shall be provided for visual displays (including display, control, and panel labels and critical markings) that must be read under darkened conditions. Illumination shall be continuously adjustable or permit adjustment to a minimum of 30 increments throughout the full operational range from full bright to full off.

5.1.2.1.7 Simultaneous access. If more than one crewmember must have simultaneous access to a group of controls or displays to ensure proper functioning of a system or subsystem, each user assigned to control and monitor a function or group of related functions shall have physical and visual access to all controls, displays, and communication capability necessary to adequately perform the assigned tasks. Where two or more users must have simultaneous read access to a computer program or data processing results from multiple personal equipment interfaces, the operation by one person shall not interfere with the operations of another person unless mission survival may be contingent upon preemption. When two or more users have simultaneous access and one preempts the other, provisions shall be made so that the preempted user can resume operations at the point of interference without information loss.

5.1.2.2 Position relationships.

5.1.2.2.1 Functional grouping. Functionally related controls and displays shall be located close to each other and arranged in functional groups, e.g., power, status, and test.

a. Sequence. Functional groups of controls and displays shall be located to provide for left-to-right (preferred) or top-to-bottom order of use, or both. Arrangement of controls by operational sequence when not within the same functional group (e.g., location, time/date, and mission designations) shall be permitted when it is more efficient.

Downloaded from http://www.everyspec.com

b. Access. Provided that the integrity of grouping by function and sequence is not compromised, the more frequently used groups and the most important groups shall be located in areas of easiest access. Control-display groups required solely for maintenance purposes shall be located in positions providing a lesser degree of access to the user relative to operating groups.

c. Functional group marking. Functional group marking shall meet the following:

(1) Outlining. Functional groups may be set apart by outlining them with contrasting lines which completely encompass the groups.

(2) Noncritical functional groups. Where functional group coding is specified by the procuring activity, and where gray panels are used, noncritical functional groups (i.e., those not associated with critical or emergency operations) shall be outlined with a 1.5-millimeter (0.0625-inch) black border in accordance with FED-STD-595/27038.

(3) Critical operations. Those panels involving emergency or extremely critical operations shall be outlined with a 5.0-millimeter (0.1875-inch) red border in accordance with FED-STD-595/21136 or designated by contrasting color pads or patches for both critical and noncritical functional areas, subject to prior approval by the procuring activity.

(4) Red compartment lighting. When red compartment lighting is used, an orange-yellow, in accordance with FED STD 595/23538, and black, in accordance with FED STD 595/27038, striped border shall be used to outline functional groups involving emergency or extremely critical operations.

(5) Aircraft crew stations. Control-display areas in aircraft crew stations shall be delineated in accordance with SAE-AS18012.

d. Consistency. The location of recurring functional groups and individual items shall be similar from panel to panel. Mirror image arrangements shall not be used.

e. Display commonality. When multiple displays and multiple display formats are used, nomenclature and symbology shall be common on all displays, as appropriate. Text or readout fields, common to all displays, (e.g., system advisories) shall be in a standard location on all display panels and formats.

f. Commonality and consistency across systems. Where possible, criteria for consistency and display commonality shall be applied across other systems expected to be operated by the user.

5.1.2.2.2 Location and arrangement. If an operator or maintainer is required to use many controls and displays, they shall be located and arranged to aid in identifying the controls used with each display, the equipment component affected by each control, and the equipment component described by each display.

5.1.2.2.3 Arrangement within groups. Controls and displays within functional groups shall be located according to operational sequence or function, or both. If the controls and displays within a functional group are not used in any specific operational sequence, they shall be arranged either in accordance with their importance or their frequency of use, with the most important or frequently used controls in the most accessible locations.

a. Horizontal arrays. Horizontal rows of displays shall be associated with horizontal controls. If controls must be arranged in fewer rows than their associated displays, controls that affect the top row of displays shall be positioned at the left, with controls that affect the second row of displays placed immediately to the right of these.

b. Vertical arrays. Vertical columns of displays shall be associated with vertical controls.

c. Simultaneous use. To maintain legibility and avoid parallax errors, a visual display that must be monitored while a related control is manipulated shall be located so that the user is not required to observe the display from an extreme visual angle.

d. Multiple displays. If manipulating one control requires reading of several displays, the control shall be placed as near as possible to the related displays and preferably beneath the middle of the displays, but not so as to obscure displays when manipulating the control. If one of a group of displays is selected for viewing with a rotary selector switch, the displays shall be arranged so that their sequence corresponds to the switch positions. If the switch includes an OFF position, the OFF position shall be to the left of the first active position (i.e., it shall be the most counter-clockwise position). If applicable, displays that are not selected shall read off-scale, not zero.

Downloaded from http://www.everyspec.com

e. Combined control. Separate displays that are affected by a combined control (e.g., concentrically ganged knobs) shall be arranged from left to right with the combined control underneath the center of the displays, but not in a location that will obscure the displays when manipulating the control. Controls shall be located so that the user's hand or arm does not obscure the associated display.

f. Separated controls and displays. When controls must be located on panels separate from their associated displays, the control and display panels shall be adjacent to each other, mounted at approximately the same direction relative to the user; the preferred arrangement is to place the display panel above the control panel. The two panels shall not be mounted facing each other. The control positions on one panel shall correspond to the associated display positions on the other panel.

g. Component groups. When a group of equipment components has the same function, the related control and display positions shall be oriented to correspond to those of the controlled and monitored components. (For example, the position of aircraft engine controls shall be oriented for a user facing the normal direction of vehicle movement.)

h. Emergency use. Emergency displays and controls shall be located where they can be seen and reached without delay (e.g., warning lights within a 30-degree cone about the user's normal line of sight (see figure 2); an emergency control close to its related warning display, or use of the nearest available hand in its nominal operating position).

i. Correspondence with equipment arrangement. If applicable, the arrangement of controls and displays shall correspond to the physical arrangement of their associated units or equipment components.

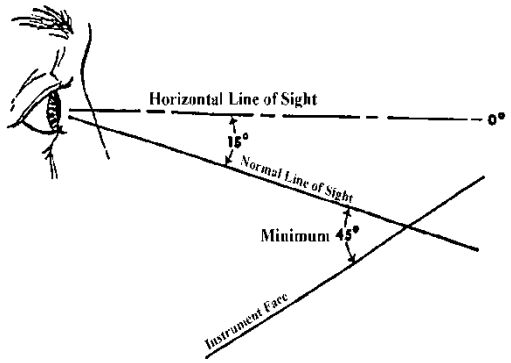

FIGURE 2. Lines of sight.

5.1.2.3 Movement relationships.

5.1.2.3.1 Lack of ambiguity. Display indicators shall clearly and unambiguously direct and guide the appropriate control response. The response of a display to control movements shall be consistent, predictable, and compatible with the user's expectations.

5.1.2.3.2 Display response time. There shall be no discernible time lag between a change in a system condition being controlled or monitored and its indication on a display (see 5.1.2.1.4d). The time lag between system response to a control input and display presentation of that response shall be minimized, consistent with safe and effective system operation.

5.1.2.3.3 Moving-pointer circular scales. Clockwise movement of a rotary control, or forward, upward, or rightward movement of a linear control shall produce a clockwise movement of circular scale pointers and an increase in the magnitude of the setting.

5.1.2.3.4 Moving-pointer linear scales. Clockwise movement of a rotary control or forward, upward, or rightward movement of a linear control shall produce a movement up or to the right for horizontal and vertical scale pointers and an increase in the magnitude of the reading.

Downloaded from http://www.everyspec.com

5.1.2.3.5 Fixed-pointer circular scale. Displays with moving scales and fixed pointers or cursors shall be avoided. When circular, fixed-pointer, moving-scale indicators are necessary, clockwise movement of a rotary control, or forward, upward, or rightward movement of a linear control shall normally produce a counterclockwise movement of the scale and an increase in the magnitude of the reading.

5.1.2.3.6 Fixed-pointer linear scale. When use of a vertical or horizontal fixed-pointer, moving-scale indicator is necessary, clockwise movement of an associated rotary control or forward, upward, or rightward movement of a linear control shall normally produce a movement of the scale down or to the left and an increase in the magnitude of the reading.

5.1.2.3.7 Digital displays. Clockwise movement of a rotary control or movement of a linear control forward, up, or to the right shall produce increasing values in digital displays.

5.1.2.3.8 Direct linkage. When a control and display are directly linked (e.g., radio frequency selector and station pointer), a rotary control shall be used if the indicator moves through an arc of more than 180 degrees. If the indicator moves through an arc of less than 180 degrees, a linear control may be used, provided that the path of control movement parallels the average path of the indicator movement and that the indicator and control move in the same relative direction.

5.1.2.3.9 Common plane. Direction of control movements shall be consistent with related movements of associated displays, equipment components, or vehicles.

5.1.2.3.10 Parallel movement. Direction-of-movement relationships shall be adhered to when control and display are parallel in line of movement.

5.1.2.3.11 Labeling. When control-display relationships specified herein cannot be adhered to, controls shall be clearly labeled (see 5.4) to indicate the direction of control movement required.

5.1.2.3.12 Movement direction. When a rotary control and a linear display are in the same plane, the part of the control adjacent to the display shall move in the same direction as the moving part of the display.

5.1.2.3.13 Arrays of indicator lights. A bottom-to-top or left-to-right movement in an array of indicator lights shall represent increasing values.

5.1.2.4 Control/display movement ratio.

5.1.2.4.1 Minimization of time. Control/display ratios for continuous adjustment controls shall minimize the time required to make desired control movements (slewing and fine adjusting), consistent with display size, tolerance requirements, viewing distance, and time delays.

5.1.2.4.2 Range of display movement. When a wide range of display-element movement is required, a small movement of the control shall yield a large movement of the display element. When a small range of display movement is required, a large movement of the control shall result in a small movement of the display, consistent with the final accuracy required.

5.1.2.4.3 Knob, coarse setting. When a knob is provided for making coarse display-element settings on linear scales, 0.4 to 2.5 millimeters (0.016 to 0.100 inch) tolerance, approximately 150 millimeters (6.0 inches) display-element movement shall be provided for one complete turn of the knob.

5.1.2.4.4 Knob, fine setting. For fine setting on linear scales, 0.2 to 0.4 millimeter (0.008 to 0.016 inch) tolerance, 25 to 50 millimeters (1.0 to 2.0 inches) of display-element movement shall be provided for one complete turn of the knob.

5.1.2.4.5 Bracketing. When bracketing is used to locate a maximum or minimum rather than a specific value, the control knob shall swing through an arc of not less than 10 degrees nor more than 30 degrees on either side of the target value in order to make the peak or dip associated with that value clearly noticeable.

5.1.2.4.6 Lever, coarse setting. When a lever is provided for coarse settings, 0.4 to 2.5 millimeters (0.016 to 0.100 inch) tolerance, one unit of display-element movement shall be induced by three units of lever movement.

Downloaded from http://www.everyspec.com

5.1.2.4.7 Lever, two-dimensional setting. When a lever is provided to make settings in two dimensions to coarse tolerances, 2.5 millimeters (0.1 inch), one unit of display-element movement shall be induced by two and one-half units of lever movement.

5.1.2.4.8 Counter control/display ratio. One revolution of a counter knob shall produce approximately 50 counts (i.e., the right hand drum rotates five times).

5.1.2.5 Signal precedence. Each of the following signals shall take precedence over those below them:

a. Warning (alarm): A signal which alerts the user to a dangerous condition requiring immediate action.

b. Caution (alert): A signal which alerts the user to an impending dangerous condition requiring attention, but not necessarily immediate action.

c. Advisory: A signal to indicate safe or normal configuration, condition of performance, operation of essential equipment, or to attract attention and impart information for routine action purposes including a signal to indicate a change in system status that, while important, does not require immediate action on the part of the user.

5.1.3 Computer controls.

5.1.3.1 Touch-screen controls for displays.

5.1.3.1.1 Use. Touch-screen control may be used to provide an overlaying control function to a data display where direct visual reference access and optimum direct control access are desired. Touch-screens are appropriate for interactions involving the selection of devices or targets on position displays (e.g., radars), arrangement diagrams, piping diagrams, discrete-function controls, or opening/closing valves. Advantages and disadvantages of touch-screen use are provided in table VI. A touch-screen shall not be used if the interface will be used to enter large amounts of data frequently. A touch-screen shall not be the sole input means if system movement or vibration degrades user performance below the level required for mission accomplishment (see 5.2.1.1.6).

Downloaded from http://www.everyspec.com

TABLE VI. Advantages and disadvantages of touch-screen use.

Advantages	Disadvantages
No separate input device	Slower alphanumeric data entry
Programmable interface	Arm fatigue
Fast access	Finger may obstruct view
Direct manipulation of targets	Fingerprints or other debris may obscure screen
Input/output in same location	Larger buttons required for finger use
Intuitive	Pointing is not very accurate
Natural pointing action	User must be within reach of screen
Generally no additional desk space required [1/]	No tactile feedback provided [3/]
Generally no training required [2/]	Unable to rest finger on target without actuation [3/]
	Accuracy degraded by vehicle movement and vibration.
	Gloved operation may be incompatible with some touch-screen technology.
	Controls must be deactivated for cleaning.

NOTES:

[1/] If incorporated as part of an existing primary display.

[2/] Application-dependent.

[3/] If a tactile feedback membrane is not incorporated.

5.1.3.1.2 Luminance transmission. Touch-screens shall have sufficient luminance transmission to allow the display to be clearly readable in the intended environment (including from the seated position for the full range of users if applicable) and meet the display luminance requirements herein.

5.1.3.1.3 Positive indication. A positive indication of touch-screen actuation shall be provided to acknowledge the system response to the control action.

5.1.3.1.4 Display response time (latency). Display response time shall be not more than 100 milliseconds.

5.1.3.1.5 Impact on visual display. Characteristics of touch-interactive devices shall not degrade visual display quality in a manner that impairs user performance. Touch-interactive devices shall provide sufficient spatial resolution for anticipated task performance.

5.1.3.1.6 Critical tasks. Where a touch-screen control is used for a critical task, system response shall require an additional, confirmatory action to ensure that the control actuation is, in fact, intended. Where confirmatory action is impractical, multiple touch actuations shall be incorporated.

5.1.3.1.7 Repeat function delay. An initial delay of 500 to 750 milliseconds shall be provided when a repeat delay is provided. All repeat functions shall display the fact that a repeat request has been initiated.

5.1.3.1.8 Sensitivity. Fingertip contact with the touch-screen shall be adequate to actuate the control or input function. Screen sensitivity must match operational modes such as gloved operations during flight.

5.1.3.1.9 Parallax and glare. Touch-screen devices shall be mounted to minimize parallax issues and specular glare.

Downloaded from http://www.everyspec.com

5.1.3.1.10 Touch-screen viewing angle. Touch-screens shall be perpendicular to the user's line of sight while the user is in a normal operating position when possible (see 5.2.3.13.7). A reduced viewing angle, less than 90 degrees from horizontal, may reduce arm fatigue for frequent actions; however, changes to viewing angle shall be evaluated in relation to the negative impact on parallax, specular glare, and readability.

5.1.3.1.11 Reach. Reach designs shall meet the following:

a. Touch-screens shall be mounted to ensure the central 90 percent of the anticipated user population can reach and actuate all areas of the screen including corners of the display.

b. Touch-screens shall be located so as to avoid full arm extension.

c. Touch-screens shall be located so as to avoid upward reach.

d. Elbow support shall be provided where possible to minimize arm fatigue.

5.1.3.1.12 Sustained interaction. Touch-screens shall not be used for frequent actions over an extended duration of time (e.g., typing on a virtual keyboard, continuous target selection). This does not apply to small hand-held devices.

5.1.3.1.13 Intermittent interaction. Touch-screens may be used to complete intermittent actions such as gross cursor navigation and communication panel selection.

5.1.3.1.14 Target shape and color. If color-coding is used, it shall be redundant to a another form of coding.

5.1.3.1.15 Dimensions, resistance, and separation. The dimensions, resistance, and separation of responsive areas shall conform to figure 3.

Downloaded from http://www.everyspec.com

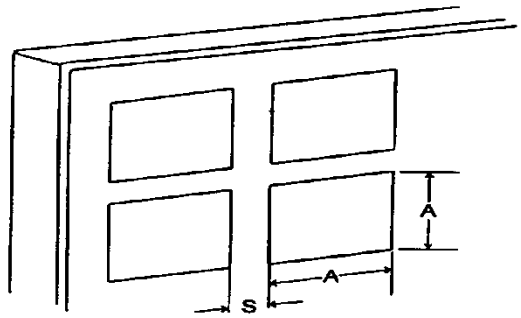

	Alphanumeric/numeric keyboards [1/]		
	A (Actuation area) [2/]	**S (Separation) [3/]**	**Resistance**
Minimum	—	0	250 mN (0.9 oz)
Preferred	13 by 13 mm (0.5 by 0.5 in)	—	—
Maximum	—	6.0 mm (0.25 in)	1.5 N (5.3 oz)

	Other applications		
	A (Actuation area) [2/]	**S (Separation) [3/]**	**Resistance**
Minimum	15 by 15 mm (0.6 by 0.6 in)	3.0 mm (0.12 in)	250 mN (0.9 oz)
Maximum	38 by 38 mm (1.5 by 1.5 in)	6.0 mm (0.25 in)	1.5 N (5.3 oz)

NOTES:

[1/] The dimensions specified apply to ungloved finger touch unless otherwise noted.

[2/] For standard cotton flame resistant anti-flash gloves (i.e., Navy flash gloves (as defined in MIL-G-2874E)) use, add 5.0 mm (0.2 in) to each dimension of the actuation area (A).

[3/] For touch-screens that use a "first contact" actuation strategy, separation between targets shall be not less than 5.0 mm (0.2 in). For touch-screens that use a "last contact" strategy, separation between targets may be less than 5.0 mm (0.2 in), but not less than 3.0 mm (0.12 in) for applications other than alphanumeric/numeric keyboards.

FIGURE 3. Touch-screen.

5.1.3.2 Keyboards.

5.1.3.2.1 Use. Arrangements of push buttons in the form of keyboards shall be used when alphabetic, numeric, or special function information is to be entered into a system.

5.1.3.2.2 Layout and configuration. Alphanumeric keyboards and numeric keypads shall be in accordance with ANSI/HFES 100.

5.1.3.2.3 Dimensions, resistance, displacement, and separation. Dimensions, resistance, displacement, and separation between adjacent edges of the push buttons on keyboards shall be in accordance with the criteria in table VII. For a given keyboard, table VII criteria shall be uniformly met for all individual keys.

Downloaded from http://www.everyspec.com

TABLE VII. Keyboards.

	Dimensions (Square)			Resistance		
	Bare hand	Arctic mittens 1/	2/	Numeric	Alphanumeric	Dual function
Minimum	10 mm (0.4 in)	19 mm (0.75 in)	15 mm (0.6 in)	1.0 N (3.5 oz)	0.25 N (0.9 oz)	0.25 N (0.9 oz)
Preferred	13 mm (0.5 in)	19 mm (0.75 in)	18 mm (0.7 in)	--	0.5 – 0.6 N (1.8 – 2.2 oz)	--
Maximum	19 mm (0.75 in)	--	--	4.0 N (14.0 oz)	1.5 N (5.3 oz)	1.5 N (5.3 oz)

	Displacement 3/			Separation (between adjacent key tops)
	Numeric	Alphanumeric	Dual function	
Minimum	0.8 mm (0.03 in)	1.3 mm (0.05 in)	0.8 mm (0.03 in)	6.4 mm (0.25 in)
Preferred	--	--	--	6.4 mm (0.25 in)
Maximum	4.8 mm (0.19 in)	6.3 mm (0.25 in)	4.8 mm (0.19 in)	--

	Vehicle Applications			
	Dimensions		Resistance	Separation
	Bare hand	Gloved hand	Numeric Input	
Minimum	10 mm (0.4 in)	19 mm (0.75 in)	2.8 N (9.9 oz)	--
Preferred	--	--	--	13 mm (0.5 in)
Maximum	25 mm (1.0 in)	25 mm (1.0 in)	6.7 N (23.7 oz)	--

NOTES:

1/ Trigger finger type; other parameters are unchanged from those of bare-handed operation.

2/ Standard cotton flame resistant anti-flash gloves (i.e., Navy flash gloves (as defined in MIL-G-2874E)).

3/ For membrane keys, preferred displacement is 0.7 mm (0.03 in) and resistance shall be not less than 2.0 N (7.2 oz). Membrane keys shall also incorporate positive tactile feedback (e.g., "snap" action).

5.1.3.2.4 Slope. The slope of nonportable keyboards shall be 0 to 25 degrees above the horizontal. The preferred keyboard slope is 0 to 15 degrees. The slope of a portable device shall be capable of being varied according to the preference of the user.

5.1.3.2.5 Multiple keyboards. Systems that include more than one keyboard shall maintain the same configuration for alphanumeric, numeric, and special function keys throughout the system and other systems the user is expected to operate.

5.1.3.2.6 Feedback. Tactile feedback shall be provided to inform the user that the intended key was pressed and that the next operation may be initiated, such as through the use of spring-loaded keys that click and return to prior height after being depressed and released.

5.1.3.2.7 Keyboard lighting. Keyboards which are used in darkened environments shall provide lighted keys that are dimmable to a minimum of 30 incremental positions from the full on to off position. Indicator lights on the keyboard shall dim concurrently with the keyboard. See 5.5.3.1.6 for night vision compatibility. Individual key characters/symbols shall be backlit to ensure readability in darkened conditions. Low-level white light shall be used for keyboard backlighting in accordance with SAE-AS25050. (Also see 5.5.3).

Downloaded from http://www.everyspec.com

5.1.3.3 Mouse/trackballs/joysticks.

5.1.3.3.1 Mouse (free-moving XY controller). Mouse designs shall meet the following:

a. Application. A mouse may be used on any flat surface to generate x and y coordinate values which control the position of the cursor on the associated display. A mouse may be used for data pickoff or for entry of coordinate values. A mouse shall be used for zero order control only (i.e., generation of x and y outputs by the controller results in proportional displacement of the cursor). A mouse shall not be used for generation of free-drawn graphics.

b. Dynamic characteristics. Dynamic characteristics shall meet the following:

(1) Orientation. The characteristics of the mouse and placement of the maneuvering surface shall allow the user to consistently orient the mouse to within 10 degrees of the correct orientation without visual reference to the controller (e.g., when the user grasps the mouse in what seems to be the correct orientation and moves it rectilinearly along what is assumed to be straight up the y axis, then the direction of movement of the cursor on the display shall be between 350 and 10 degrees).

(2) Hand grasp. The mouse shall be easily movable in any direction without a change of hand grasp.

(1) Smooth movement. The mouse shall result in smooth movement of the cursor in the same direction ±10 degrees.

(3) Handedness. The mouse shall be operable with either the left or right hand.

(4) Display/movement relationship. A complete excursion of the mouse from side-to-side of the maneuvering area shall move the cursor from side-to-side on the display regardless of scale setting or offset unless expanded movement is selected for an automatic sequencing mode of operation.

(5) Off edge indicator. If the mouse can drive the cursor off the edge of the display, indicators shall be provided to assist the user in bringing the cursor back onto the display.

c. Connection. Where the mouse is connected to the computer via a cable, the cable shall be long enough to remain slack during use.

d. Buttons. A mouse shall have one or more buttons that provide features related to various functions and control actions. The mouse button(s) shall be operable without diminishing control of the mouse. The mouse design shall permit the finger to actuate the button surface(s) from a neutral posture. Mouse button contact surfaces shall be perpendicular to displacement direction and finger motion during actuation. Mouse button resistance and displacement shall be in accordance with the criteria in table VIII.

e. Shape and dimensions. The mouse shall be shaped to allow the user to grasp it using either hand, with the hand in a relaxed and neutral posture (i.e., minimal wrist deviation, flexion, or extension is required). Mouse dimensions shall be in accordance with the criteria in table VIII.

TABLE VIII. Mouse.

	Dimensions			**Button Characteristics**	
	Width	**Length**	**Height**	**Resistance**	**Displacement**
Minimum	40 mm (1.6 in)	70 mm (2.8 in)	25 mm (1.0 in)	0.5 N (1.8 oz)	5.0 mm (0.02 in)
Maximum	70 mm (2.8 in)	120 mm (4.7 in)	40 mm (1.6 in)	1.5 N (5.4 oz)	6.0 mm (0.24 in)

5.1.3.3.2 Trackball. Also known as ball control, ball tracker, joyball, and rolling ball.

a. Use. A trackball suspended on low-friction bearings may be used for various control functions, such as selection of data on a display. If an application allows the trackball to drive the cursor on the display off the edge of the display, indicators shall be provided to advise the user how to bring the cursor back onto the display. Trackballs shall be used only as position controls (i.e., a given movement of a trackball makes a proportional movement of the cursor on the display).

Downloaded from http://www.everyspec.com

b. Button placement. Trackball buttons and buttons near the trackball shall be located to prevent accidental actuation during trackball use (i.e., user hand placement while manipulating the trackball shall not accidentally actuate buttons). If the trackball is designed for finger control (i.e., roller manipulated using fingers), the primary actuation button shall be placed near the thumb position and permit thumb actuation.

c. Dynamic characteristics. The trackball shall be capable of rotation in any direction so as to generate any combination of x and y output values. When the trackball is moved in either the x or y directions alone there shall be no apparent cross-coupling (cursor movement in the orthogonal direction). While manipulating the trackball, neither backlash nor cross-coupling shall be apparent to the user. Trackball control ratios and dynamic features shall meet the dual requirement of rapid gross positioning and smooth, precise fine positioning.

d. Limb support. When trackball controls are used to make precise or continuous adjustments, wrist support or arm support, or both, shall be provided (see 5.1.4.2.2a(4)).

e. Dimensions, resistance, and clearances. Trackball dimensions, resistance, and clearances shall be in accordance with the criteria on figure 4. The smaller diameter trackballs shall be used where space availability is very limited and when there is no need for precision. Permanent trackball mounting, if used, shall be as shown on figure 4.

Downloaded from http://www.everyspec.com

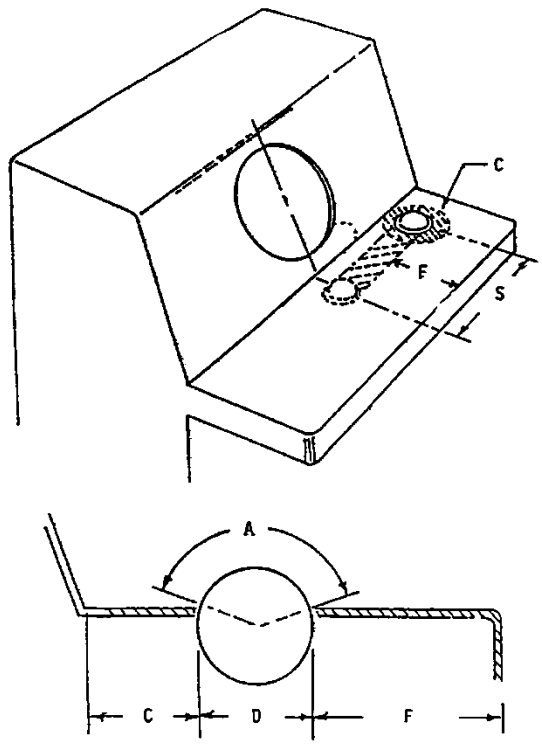

	Dimensions		Resistance		Clearance		
	D; Diameter	**A; Surface exposure**	**Precision required**	**Vibration or accel conditions**	**S; Display CL to ball CL**	**C; Around ball**	**F; Ball to shelf front**
Minimum	50 mm (2.0 in)	100 deg	0.25 N (0.9 oz)	—	0	50 mm (2.0 in)	120 mm (4.75 in)
Preferred	100 mm (4.0 in)	120 deg	0.3 N (1.1 oz)	—	—	—	—
Maximum	150 mm (6.0 in)	140 deg	1.5 N (5.4 oz)	1.7 N (6.0 oz)	320 mm (12.6 in)	—	250 mm (10 in)

NOTE:

1. Initial resistance shall range from 0.25 N (0.9 oz) to 0.4 N (1.4 oz).

FIGURE 4. Trackballs.

5.1.3.3.3 Displacement joysticks. Displacement joysticks shall meet the following:

a. General.

(1) Use. Joysticks may be used when the task requires precise or continuous control in two or more related dimensions.

(2) Positioning accuracy. When positioning accuracy is more critical than positioning speed, displacement joysticks (where resistance to movement increases with the distance the user displaces it from the center (null) position) shall be selected over isometric joysticks (see 5.1.3.3.4).

(3) Use for display functions. Displacement joysticks may also be used for various display functions such as selecting data from a display and generation of free-drawn graphics.

(4) Off edge indicator. In rate control applications, which allow the cursor to transit beyond the edge of the display, indicators shall be provided to aid the user in bringing the cursor back onto the display.

(5) Return to center. Displacement joysticks used for rate control shall be spring-loaded for return to the center when the hand is removed.

Downloaded from http://www.everyspec.com

(6) Deadband. Displacement joysticks that have a deadband near the center or hysteresis shall not be used with automatic sequencing of a cursor unless they are instrumented for null return or zero-set to the instantaneous position of the stick at the time of sequencing. Upon termination of an automatic sequencing routine, the joystick center shall again be registered to scope center.

b. Hand-operated displacement joysticks.

(1) Specific use.

(a) In addition to general use, hand-operated displacement joysticks may be used to control vehicles and aim sensors. Such joysticks may be used as mounting platforms for secondary controls, such as thumb- and finger-operated switches. Operation of secondary controls has less induced error on a displacement hand grip than on an isometric handgrip.

(b) When buttons are located on hand-operated joysticks, they shall be operable using a normal grip without diminishing control of the joystick.

(2) Dynamic characteristics.

(a) Movement of a hand-operated joystick shall not exceed 45 degrees from the center position.

(b) Movement of a hand-operated joystick shall be smooth in all directions.

(c) Positioning of a cursor shall be attainable without noticeable backlash, cross-coupling, or need for multiple corrective movements.

(d) Control ratios, friction, and inertia shall meet the dual requirements of rapid gross positioning and precise fine positioning.

(e) When a joystick is used for generating free-drawn graphics, the display refresh rate shall be sufficiently high to display the cursor as a continuous track.

(f) Delay between control movement and the confirming display response shall be not greater than 0.1 second.

(3) Button placement. Joystick buttons shall be located to prevent accidental actuation during joystick use (i.e., buttons shall not be placed where the user would rest the heel of their hand to manipulate the joystick).

(4) Trigger actuation. Inadvertent trigger actuation shall be minimized through proper use of trigger guards, safety latches, or other means.

(5) Coding. Joystick buttons and other controls shall be coded by shape, size, location, texture, or other means to aid in non-visual identification.

(6) Dimensions and clearance.

(a) The hand grip length shall be 110 to 180 millimeters (4.3 to 7.1 inches).

(b) The hand grip diameter shall be not more than 50 millimeters (2 inches).

(c) Clearances of 100 millimeters (4.0 inches) to the side and 50 millimeters (2.0 inches) to the rear shall be provided to allow for hand movement.

(d) Clearance shall be provided to allow for the full range of joystick motion.

(e) Clearance shall be provided to enable actuation of joystick buttons while in any position within the joystick range of motion.

(f) Joysticks shall be mounted to provide forearm or wrist support.

(g) Modular devices shall be mounted to allow actuation of the joystick without slippage, movement, or tilting of the mounting base.

c. Finger-operated displacement joysticks.

(1) Dynamic characteristics. Dynamic characteristics shall be in accordance with5.1.3.3.3.b(2). Recessed mounting may be utilized as indicated on figure 5 to allow more precise control.

(2) Button placement. Joystick and other nearby buttons shall be located to prevent accidental actuation during joystick use (i.e., buttons shall not be placed where the user would rest their hand to manipulate the joystick).

Downloaded from http://www.everyspec.com

(3) Dimensions, resistance, and clearance.

(a) The joystick shall be mounted on a desk or shelf surface as shown on figure 5.

(b) Joysticks shall be mounted to provide forearm or wrist support.

(c) Modular devices shall be mounted to allow actuation of the joystick without slippage, movement, or tilting of the mounting base.

(d) Clearance shall be provided to allow for the full range of joystick motion.

(e) Clearance shall be provided to enable actuation of joystick buttons while in any position within the joystick range of motion.

d. Thumbtip-/fingertip-operated displacement joysticks.

(1) Specific use. Thumbtip-/fingertip-operated joysticks may be mounted on a hand grip, which serves as a steady rest to damp vibrations and increase precision.

(2) Hand grip with mounted joystick. If a thumbtip-/fingertip-user joystick is mounted on a hand grip, the hand grip shall not simultaneously function as a joystick controller.

(3) Dynamic characteristics. Movement shall not exceed 45 degrees from the center position.

(4) Button placement. Joystick buttons shall be located to prevent accidental actuation during joystick use.

(5) Dimensions, resistance, and clearance.

(a) Joysticks shall be mounted to provide wrist or hand support.

(b) Modular devices shall be mounted to allow actuation of the joystick without slippage, movement, or tilting of the mounting base.

(c) Clearance shall be provided to allow for the full range of joystick motion.

(d) Clearance shall be provided to enable actuation of joystick buttons while in any position within the joystick range of motion.

Downloaded from http://www.everyspec.com

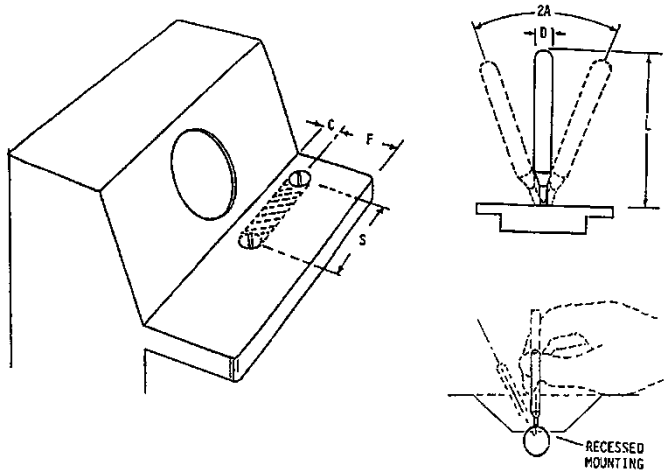

	Dimensions		Resistance	A; Displacement	Clearance		
	D; Diameter	L; Length			S; Display CL to stick CL	C; Around stick	F; Stick CL to shelf front
Minimum	6.5 mm (0.25 in)	75 mm (3.0 in)	3.3 N (12 oz)		0	1/	120 mm (4.75 in)
Maximum	16 mm (0.625 in)	150 mm (6.0 in)	8.9 N (32 oz)	π/4 rad (45 deg)	400 mm (15.75 in)		250 mm (10 in)

NOTE:
1/ Maximum stick excursion plus 100 mm (4 in).

FIGURE 5. Displacement joysticks.

5.1.3.3.4 Isometric joysticks (two-axis controllers). Also known as stiff stick, force stick, or pressure stick. The control has no perceptible movement, but its output is a function of the force applied. Isometric joysticks shall meet the following:

a. General.

(1) Use. Isometric joysticks may be used for tasks requiring precise or continuous control in two or more related dimensions and are particularly appropriate for applications: (1) which require precise return to center after each use, (2) in which user feedback is primarily visual rather than tactile feedback from the control itself, and (3) where there is minimal delay and tight coupling between control and input and system reaction.

(2) Applications to avoid. Isometric sticks shall not be used in applications that require the user to maintain a constant force on the controller for a long period of time or that provide no definitive feedback when maximum control inputs have been exceeded.

(3) Positioning speed. When positioning speed is more critical than positioning accuracy, isometric joysticks shall be selected over displacement joysticks.

(4) Use for display functions. Isometric joysticks may also be used for various display functions such as data pickoff from a display.

(5) Off edge indicator. In rate control applications, which may allow the cursor to transit beyond the edge of the display, indicators shall be provided in order to aid the user in bringing the cursor back onto the display.

b. Hand-operated isometric joysticks.

(1) Specific use. In addition to general use, hand-operated isometric joysticks may be used as vehicle controllers, aiming sensors, and mounting platforms for secondary controls, such as thumb- and finger-operated switches. Operation of secondary controls has greater induced error on isometric joysticks than on displacement joysticks.

Downloaded from http://www.everyspec.com

(2) Dynamic characteristics. Maximum force for full output shall be not more than 118 Newtons (26.7 pounds).

(3) Button placement. Joystick buttons shall be located to prevent accidental actuation during joystick use (i.e., buttons shall not be placed where the user would rest the heel of their hand to manipulate the joystick).

(4) Trigger actuation. Inadvertent trigger actuation shall be minimized through proper use of trigger guards, safety latches, or other means.

(5) Coding. Joystick buttons and other controls shall be coded by shape, size, location, texture, or other means to aid in non-visual identification.

(6) Dimensions, resistance, and clearance. Dimensions, resistance, and clearance shall be in accordance with 5.1.3.3.3b(6).

c. Finger-operated isometric joysticks. Dimensions, resistance, and clearance shall conform to 5.1.3.3.3c(3).

d. Thumbtip-/fingertip-operated isometric joysticks. Thumbtip-/fingertip-operated joysticks may be mounted on a hand grip, which serves as a steady rest to damp vibrations or increase precision. If so mounted, the hand grip shall not simultaneously function as a joystick controller. Dimensions, resistance, and clearance of thumbtip-/fingertip-operated joysticks shall be in accordance with 5.1.3.3.3d(5).

5.1.3.3.5 Grid-and-stylus devices. The following provisions cover techniques that use a means of establishing an x and y grid and a stylus for designating specific points on that grid for control purposes. For dimensions and mounting, see 5.1.3.3.6c.

a. Application. Grid and stylus devices may be used to select data from a display, enter points on a display, generate free-drawn graphics, and similar control applications. The grid may be on a transparent medium allowing stylus placement directly over corresponding points on the display or it may be displaced from the display in a convenient position for stylus manipulation. A cursor (bug, mark, hook) shall be presented on the display at the coordinate values selected by the stylus. Feedback (e.g., a click) shall be provided for control actions. Grid-and-stylus devices shall be used only for zero order control functions (i.e., displacement of the stylus from the reference position causes a proportional displacement of the cursor).

b. Dynamic characteristics. Movement of the stylus in any direction on the grid surface shall result in smooth movement of the cursor in the same direction. Discrete placement of the stylus at any point on the grid shall cause the cursor to appear at the corresponding coordinates and to remain there as long as the stylus is not moved. Refresh rate for the cursor shall be sufficiently high to ensure the appearance of a continuous track whenever the stylus is used for generation of free-drawn graphics.

c. Dimensions and mounting. Transparent grids which are used as display overlays shall conform to the size of the display. Grids which are displaced from the display shall approximate the display size. Grids shall be mounted below the display in an orientation to preserve directional relationships to the maximum extent (i.e., vertical plane passing through the north/south axis on the grid shall pass through or be parallel to the north/south axis of the display).

5.1.3.3.6 Light pens and other styli. Light pens and other styli shall meet the following:

a. Use. A light pen may be used as a track-oriented readout device. It may be positioned on the display screen to detect a computer-generated track by sensing its refresh pattern; the display system will then present a hook on the designed track. With suitable additional circuitry, a cursor can be made to track the movement of the light pen across the screen surface, thus allowing it to function as a two-axis controller capable of serving the same purposes as the grid and stylus devices of 5.1.3.3.5.

b. Dynamic characteristics. When used as a two-axis controller, light pen dynamic characteristics shall be in accordance with 5.1.3.3.5b. The stylus force required on a tablet to produce a continuous input shall be not greater than 0.8 Newton (2.9 ounces of force).

c. Dimensions and mounting. The light pen shall be 120 to 180 millimeters (4.7 to 7.1 inches) long with a diameter of 7.0 to 20 millimeters (0.3 to 0.8 inch). The light pen shall have a slip resistant surface. The light pen shall weigh 0.1 to 0.25 Newton (0.35 to 0.875 ounces of force). A means shall be provided to stow or secure the light pen when it is not in use.

Downloaded from http://www.everyspec.com

d. Buttons. The contact surface of a selector button that is mounted on a stylus or light pen shall have a diameter of not less than 0.05 millimeter (0.2 inch). The force required to actuate a button mounted on a stylus or light pen shall be 0.3 to 0.8 Newton (1.0 to 2.9 ounces of force) (see 5.1.3.4.5c).

5.1.3.3.7 Pucks. Use and characteristics of pucks shall be in accordance with ISO 9241-9.

5.1.3.4 Data entry.

5.1.3.4.1 General. Data entry functions shall be designed to establish consistency of data entry transactions, minimize input actions and memory load on the user, ensure compatibility of data entry with data display, and provide flexibility of user control of data entry.

a. User pacing. Data entry shall be paced by the user, rather than by the system.

b. Positive feedback. The system shall provide a positive feedback to the user of the acceptance or rejection of a data entry. Feedback response times shall be in accordance with 5.1.2.1.4d.

c. Processing delay. Where system overload or other system conditions will result in a processing delay, the system shall acknowledge the data entry and provide an indication of the delay to the user. If possible, the system shall advise the user of the time remaining for the process or of the fraction of the process completed.

d. Explicit action. Data entry shall require an explicit completion action, such as pressing an ENTER key.

e. Validation. Data entries shall be validated by the system for correct format, legal value, or range of values. Where repetitive entry of data sets is required, data validation for each set shall be completed before another transaction can begin (see 5.1.2.1.5k).

f. Software-available data. The user shall not be required to enter data already available to the software.

g. Input units. Data shall be entered in units that are familiar to the user.

h. Cursors. Cursors shall meet the following:

(1) Control. Systems employing cursors shall provide cursor control capability. The user shall be able to adjust the sensitivity of the cursor movement to be compatible with the required task and user skills where appropriate. The ability for the user to adjust the sensitivity of the cursor movement shall only be provided where adjustment of this control could not adversely affect the ability to fulfill the mission and complete critical tasks.

(2) Display. A movable cursor within the display shall have a distinctive visual attribute that does not obscure other displayed entities. When fine positioning accuracy is required, as in some forms of graphic and image processing applications, the displayed cursor shall include an appropriate point designation feature (such as crosshairs). The cursor shall not move beyond the display boundaries and disappear from sight. If the cursor is moved by depressing a key, releasing the key shall cause the cursor to stop moving.

(3) Home position. The home position for the cursor shall be consistent across similar types of displays.

(4) Explicit actuation. A separate, explicit action, distinct from cursor position, shall be required for the actual entry (e.g., enabling, actuation) of a designated position.

(5) Incremental cursor positioning. Where cursor positioning is incremental by discrete steps, the step size of cursor movement shall be consistent horizontally (i.e., in both right and left directions), and vertically (in both up and down directions).

(6) Keyboard cursor control. When position designation is required in a task emphasizing keyed data entry, cursor control shall be by some device integral to the keyboard. If cursor movement is accomplished by depressing keys, the keys shall be located on the main keyboard.

(7) Movement relationships. The response of a cursor to control movements shall be consistent, predictable, and compatible with the user's expectations. For cursor control by key action, the cursor shall move in the corresponding direction of the arrow key that was pressed (i.e., left arrow to left, right arrow to right, up arrow up, down arrow down). For cursor control by joystick, movement of the control shall result in the cursor moving in the corresponding direction (i.e., left movement moves cursor to the left, right movement to the right, push movement upward, pull movement down). Cursor responses to movements of other controls shall be in accordance with 5.1.1.2.1 or to the movement-related provisions of the applicable control specified in 5.1.

Downloaded from http://www.everyspec.com

(8) Abbreviations, acronyms, mnemonics, and codes. When abbreviations, acronyms, mnemonics, or codes are used to shorten data entry, they shall be distinctive and have an intuitive relationship or association to normal language or specific job-related terminology. An abbreviation shall be no longer than is necessary to ensure a clear and unambiguous meaning. An easily accessible reference of abbreviation meanings shall be made available. Abbreviations, acronyms, mnemonics, and codes shall be consistent within and between systems and applications that are anticipated to be used by the same user population.

(9) Explicit delete action. Data deletion or cancellation shall require an explicit action, such as depressing a DELETE key. Permanent deletion (in absence of an "undo" function) of more than one character shall not be allowed without an affirmative response to an "Are you sure?" type of query.

(10) Change of data. Where a user requests change (or deletion) of a data item that is not currently being displayed, the option of displaying the old value before confirming the change shall be presented.

(11) Single method of data entry. Data entry methods and data displays shall not require the user to shift between entry methods.

(12) Data entry display. Where data entry on an electronic display is permitted only in prescribed areas, a clear visual definition of the entry fields shall be provided.

5.1.3.4.2 Data entry using keyboard. Keyboards shall be in accordance with the provisions below (also see 5.1.3.2).

a. Use. A keyboard shall be used to enter alphabetic, numeric, and other special characters into the system.

b. Characteristics. Keyboard characteristics shall be in accordance with ANSI/HFES 100.

c. Length. The length of individual data items shall be no more than necessary to accomplish the task.

d. Justification. When entering tabular data, the user shall not be required to right- or left-justify tabular data entries. The system shall automatically justify columnar data with respect to decimal point, left margin, or right margin, depending on the type of data.

e. Numeric keypads. Keyboards used in systems that require substantial numeric input shall be equipped with a numeric keypad.

f. Minimization of keying. The amount of keying required shall be no more than necessary to accomplish the task.

g. Minimization of shift keying. The use of key shifting functions shall be minimized during data entry transactions.

h. Data change. In keyed data entry, means shall be provided to allow users to change previous entries, if necessary, by DELETE and INSERT actions.

5.1.3.4.3 Data entry using fixed function (dedicated) keys. Data entry using fixed function keys shall meet the following:

a. Use. Fixed function keys (e.g., ENTER) shall be used for time-critical, error-critical, or frequently used control inputs.

b. Standardization. Fixed function keys shall be common throughout the system.

c. Functional consistency. Once a key has been assigned a given function, it shall not be reassigned to a different function for a given user.

d. Availability. Fixed function keys shall be selected to control functions that are continuously available (i.e., lockout of fixed function keys shall be minimized). At any step in a transaction sequence, function keys not used for current inputs shall be temporarily disabled under computer control. Mechanical overlays shall not be used to temporarily disable function keys.

e. Non-active keys. Non-active fixed function keys shall be replaced by a blank key or grayed-out.

f. Grouping. Fixed function keys shall be logically grouped and placed in distinctive locations on the keyboard.

g. Actuation. Except when used to toggle between two opposing states, a fixed function key shall require only a single actuation to accomplish its function.

Downloaded from http://www.everyspec.com

h. Feedback. When fixed function key activation does not result in an immediately observable natural response, the user shall be given an indication of system acknowledgment.

i. Fixed function labels. Fixed key assignments shall be displayed at all times. Fixed key assignments shall be displayed by direct marking. Where abbreviations are necessary for fixed keys, standard abbreviations shall be used.

j. Prolonged function key depression. Prolonged depression of function keys shall not result in a repeat of the function, except for the DELETE key.

5.1.3.4.4 Data entry using variable function keys. Data entry using variable function keys shall meet the following:

a. Use. Variable function keys may be used for programmable menu selection and entry of control functions. A single entry on a variable function key shall not produce a critical action. Critical actions shall require confirmation when initiated with a variable action key.

b. Status display. When the effect of a function key varies, the status of the key shall be displayed.

c. Reprogrammable or inactive default functions. When keys with labeled default functions are reprogrammed or turned off, a visual warning shall alert the user that the standard function is not currently accessible via that key.

d. Relabeling. Provisions shall be made for easily relabeling variable function keys. Labels for variable function keys, located along the perimeter of a display, may be generated on the display face.

e. Shifted characters. Shift keys shall not be required to operate variable function keys.

f. Easy return to base-level functions. Where the functions assigned to a set of function keys change as a result of user selection, the user shall be given an easy means to return to the initial, base-level functions. For example, in cockpit design, where multifunction keys may be used for various purposes such as navigation or weapons control, the aircrew shall be able to take a single action to restore those keys quickly to their basic flight control functions.

5.1.3.4.5 Data entry using a light pen. Data entry using a light pen shall meet the following:

a. Use. Direct-pointing controls shall be used when item selection is the primary type of data entry.

b. Dimensions and mounting. See 5.1.3.3.6c.

c. Actuation/deactuation. Light pens shall be equipped with a discrete actuating/deactuating mechanism.

d. Feedback. Position of the light pen, preferably in the form of displayed cursor (e.g., circle, crosshair) or highlighting, which also informs the user that the system is recognizing the presence of the light pen, shall be provided. Feedback shall be large enough to be seen under the point of the light pen. Feedback shall be provided to indicate actuation of the light pen and receipt of the input by the system.

5.1.3.4.6 Data entry using directional controllers. A joystick, trackball, or similar device may be used when precise input functions are required. Joysticks, trackballs, grid-and-stylus devices, and x-y controllers shall be in accordance with 5.1.3.3.4, 5.1.3.3.2, 5.1.3.3.5, and 5.1.3.3.1. A discrete mechanism shall be provided to allow the user to actuate/deactuate the device.

5.1.3.4.7 Data entry using touch-screen. See 5.1.3.1 for information on touch-screens.

5.1.3.5 Interactive control.

5.1.3.5.1 General.

a. Control actions. Control actions shall be minimized, consistent, make minimal memory demands of the user, and be sufficiently flexible to adapt to different user needs.

b. Dialog types. Dialog types shall be compatible with anticipated task requirements and user skills.

c. System response time. System response times shall accommodate dialog type and requirements for user training (see 5.1.2.1.4d).

Downloaded from http://www.everyspec.com

d. Response time. System response times shall be consistent with operational requirements. Required user response times shall be compatible with required system response time. Required user response times shall be within the limits imposed by total user tasking expected in the operational environment (see 5.1.2.1.4d).

(1) Response time induced keyboard lockout. If computer processing time requires delay of concurrent user inputs and no keyboard buffer is available, keyboard lockout shall occur until the computer can accept the next transaction. An alert shall be displayed to indicate to the user that lockout has occurred.

(2) Keyboard restoration. When the computer is ready to continue, following response time induced keyboard lockout, a signal to indicate such shall be presented, e.g., cursor changes back to normal shape.

(3) Interrupt to end keyboard lockout. When keyboard lockout has occurred, the user shall be provided with a capability to abort a transaction that has resulted in an extended lockout. A reset prevention capability shall act like an UNDO command that stops ongoing processing and does not RESET the computer, thereby losing prior processing.

e. Simplicity. Control/display relationships shall be straightforward and explicit. Control actions shall be simple and direct, whereas potentially destructive control actions shall require extended user attention such that they are not easily acted on (e.g., "Are you sure?" queries).

f. Accidental actuation. Provision shall be made to prevent accidental actuation of potentially destructive control actions, such as accidental erasure or memory dump.

g. Compatibility with user skill. Controls shall be compatible with the lowest anticipated user skill levels. Experienced users shall have options which shortcut intervening steps necessary for inexperienced users.

h. Availability of information. Information necessary to select or enter a specific control action shall be available to the user when selection of that control action is appropriate.

i. Concurrent display. Concurrent displays shall meet the following:

(1) Control actions to be selected from a discrete set of alternatives shall have those alternatives displayed prior to the time of selection.

(2) The current value of any parameter or variable with which the user is interacting shall be displayed.

(3) User control inputs shall result in a positive feedback response displayed to indicate performance of requested actions.

j. Hierarchical process. The number of hierarchical levels used to control a process or sequence shall be minimized. Display and input formats shall be similar within hierarchical levels. The system shall indicate the current positions within the sequence at all times.

k. User memorization. The system shall not require the user to learn mnemonics, codes, special or long sequences, or special instructions.

l. Dialog type. The choice of dialog type (e.g., form filling, menus, command language) for interactive control shall be compatible with user characteristics and task requirements.

m. Number system. Number systems shall meet the following:

(1) When numeric data are displayed or required for control input, such data shall be in the decimal, rather than binary, octal, hexadecimal, or other number system unless it is operationally imperative to use an alternate number system.

(2) When numeric data is not displayed in the decimal format due to operational requirements, the alternate number system used shall be clear to the user.

n. Data manipulation. The system shall enable the user to manipulate data without concern for internal storage and retrieval mechanisms of the system.

o. Computer processing constraints. The sequence of transaction selection shall generally be dictated by user choices and not by internal computer processing constraints.

p. Feedback for correct input. Control feedback responses to correct user input shall consist of changes in state or value of those display elements which are being controlled and shall be presented in an expected and logically natural form. An acknowledgment message shall be provided only where the more conventional mechanism is not appropriate or where feedback response time must exceed 1 second.

Downloaded from http://www.everyspec.com

q. Feedback for erroneous input. Where control input errors are detected by the system (see 5.1.2.1.5b), error messages shall be available as provided in 5.1.2.1.5e, and error recovery procedures shall be as provided in 5.1.2.1.5f.

r. Control input data display. The presence and location of control input data entered by the user shall be clearly and appropriately indicated. Data displayed shall not mislead the user with regard to nomenclature, units of measure, sequence of task steps, or time phasing.

s. Originator identification. Except for broadcast communication systems, the transmitter of each message in inter-user communications shall be identified, automatically, if possible.

5.1.3.5.2 Menu selection. Menu selection shall meet the following:

a. Use. Menu selection interactive control shall be used for tasks that involve little or no entry of arbitrary data and where users may have relatively little training. Menu selection interactive control shall be used when a command set is so large that users are not likely to be able to commit all of the commands to memory.

b. Selection.

(1) Devices shall be in accordance with the following:

(a) A mouse or other pointing device (including touch technology) shall be used for menu selection (see 5.1.3.1).

(b) Where design constraints do not permit pointing devices, a standard window shall be provided for the user to key the selected option code.

(c) If menu selection is accomplished by pointing, dual actions shall be provided. The first action shall designate the selected option. The selection for processing shall be followed by a separate action to enter the selection for processing.

(2) Each page of options (menu) shall have a title that clarifies the purpose of that menu.

(3) Users shall be provided the capability to stack menu selections, i.e., to make several menu selections without having each menu displayed.

(4) A menu shall not consist of a long list of multi-page options.

(5) The menu shall be logically segmented to allow several sequential selections among a few alternatives.

c. Active option presentation. The system shall present only menu selections for actions which are currently available.

d. Format consistency. Menus shall be presented in a consistent format throughout the system and across other systems the user is expected to operate. Menus shall be readily available at all times.

e. Option sequence. Menu selections shall be listed in a logical order, or, if no logical order exists, in the order of frequency of use.

f. Simple menus. If the number of selections can fit on one page in no more than two columns, a simple menu shall be used. If the selection options exceed two columns, hierarchical menus may be used.

g. Option presentation. Selection codes and associated descriptors shall be presented on single lines.

h. Direct function call. If several levels of hierarchical menus are provided, a direct function call capability shall be provided such that the experienced user does not have to step through multiple menu levels.

i. Option coding. When selections are indicated by coded entry, the code associated with each option shall be included on the display in some consistent manner.

j. Keyed codes. If menu selections must be made by keyed codes (mnemonics), the options shall be coded by the first several letters of their displayed labels rather than by more arbitrary numeric codes. Keyed codes shall not duplicate any other user function codes.

k. Position in structure. When menu traversal can be accomplished by clearly defined hierarchical paths, the user shall be given some indication of the displayed menu's current position in the overall or relevant structure, e.g., an optional display of "path" information or cascading menus. A menu tree showing the menu hierarchy shall be included in the user manual or online Help.

Downloaded from http://www.everyspec.com

l. Back menu. When using hierarchical menus, the user shall be able to return to the next higher level by using single key action until the initial, top-level menu, or display is reached.

m. Return to top level. A function shall be provided to directly recall the initial, top-level menu, or display without stepping through the menu or display hierarchy.

5.1.3.5.3 Form filling. Form filling shall meet the following:

a. Use. Form filling interactive control may be used where some flexibility in data to be entered is needed and where the users will have moderate training. A form-filling dialog shall not be used when the computer must handle multiple types of forms and the computer response is slow.

b. Grouping. Displayed forms shall be arranged to group related items together.

c. Format and content consistency. The format and content of displayed forms shall duplicate in every major parameter the (paper) form it is intended to represent. The displayed form shall require a response for every data entry field; advancing through a field (i.e., leaving blank) for which no entry is desired will require an explicit action such as “TAB” or “ENTER” keystrokes.

d. Distinctiveness of fields. Fields or groups of fields shall be separated by spaces, lines, or other delineation cues. Required fields shall be distinguished from optional fields.

e. Field labels. Field labels shall be distinctively presented such that they can be distinguished from data entry. Labels for data entry fields shall incorporate additional cueing of data format where the entry is made up of multiple inputs (e.g., DATE (MM/DD/YYYY): _ _ / _ _ / _ _ _ _).

f. Cursor. A displayed cursor shall be positioned by the system at the first data entry field when the form is displayed. The cursor shall be advanced by a tab key to the next data entry field when the user has completed entry of the current field. The cursor shall automatically move to the next field when the end of the field is reached.

g. Entry length indication. The maximum acceptable length for variable length fields shall be indicated.

h. Overwriting. Data shall not be entered by overwriting a set of characters in a field (such as a default).

i. Unused underscores. When an item length is variable, the system shall not require the user to remove unused underscores.

j. Dimensional units. When a consistent dimensional unit is used in a given entry field, the dimensional unit shall be provided by the computer. When the dimensional unit varies for a given field, it shall be provided, or selected, by the user.

k. User omissions. When required data entries have not been input, the omission shall be indicated to the user and either immediate or delayed input of the missing items shall be allowed. Delayed entry shall be avoided. If it is necessary, the user shall be required to designate the field to indicate that the missing item is delayed, not overlooked.

l. Non-entry areas. Non-entry (protected) areas of the display shall be designated and made inaccessible to the user via the cursor.

m. Flexible data entry. When multiple data items are entered as a single transaction, the user shall be allowed to reenter, change, or cancel any item before taking a final ENTER action.

n. Informative labels. Descriptive wording shall be employed when labeling data fields. Use of arbitrary codes shall be avoided.

o. Logical order. Where no source document or external information is involved, forms shall be designed so that data items are ordered in a logical sequence for input.

p. Dialog boxes for control entry. Dialog boxes may be used as an aid for composing complex control entries. For example, for a print request, a displayed form might help a user invoke the various format controls that are available.

5.1.3.5.4 Fixed function keys. Fixed function key interactive control may be used for tasks that require only a limited number of control inputs or in conjunction with other dialog types (see 5.1.3.4.3).

Downloaded from http://www.everyspec.com

5.1.3.5.5 Command language. Command language shall meet the following:

a. Use. Command language interactive control may be used for tasks that involve a wide range of user inputs and where user familiarity with the system can take advantage of the flexibility and speed of the control technique.

b. User viewpoint. A command language shall reflect the user's point of view such that the commands are logically related to the user's conception of what is being done.

c. Distinctiveness. Command names shall be distinctive from one another.

d. Punctuation. The command language shall contain a minimum of punctuation or other special characters.

e. Abbreviations. The user shall be permitted to enter the full command name or an abbreviation for any command of more than five characters.

f. Standardization. All commands and their abbreviations, if any, shall be standardized within and across other systems the user is expected to operate.

g. Displayed location. Commands shall be entered and displayed in a standard location on the display.

h. Command prompts. The user shall be able to request prompts, as necessary, to determine required parameters or available options for an appropriate next command entry.

i. Complexity. The command language shall be programmed in layers of complexity such that the basic layer will allow the inexperienced user to control a transaction. The command language shall allow skipping from basic to more advanced layers to meet the user's current needs as skill increases.

j. User definition of macro commands. The programming shall not accept a user designated macro name that is the same as an existing command name ("reserved keyword").

k. Standard techniques for command editing. Users shall be allowed to edit erroneous command entries with the same techniques that are employed to edit data entries.

l. Destructive commands. If a command entry may have disruptive consequences, the user shall be required to review and confirm a displayed interpretation of the command before it is executed.

5.1.3.5.6 Question and answer. Question and answer designs shall meet the following:

a. Use. Question-and-answer dialogs may be used for routine data entry tasks where data items are known and their ordering can be constrained, where users will have little or no training, and where the computer is expected to have medium response speed.

b. Questions displayed separately. Each question shall be displayed separately in question-and-answer dialogs. Users shall not be required to answer several questions at once.

c. Recapitulating prior answers. When a series of computer-posed questions are interrelated, answers to previous questions shall be displayed when those will provide context to help a user answer the current question.

d. Source document capability. When questions prompt entry of data from a source document, the question sequence shall match the data sequence in the source document.

5.1.3.5.7 Query language. Query language shall meet the following:

a. Use. Query language dialog shall be used for tasks emphasizing unpredictable information retrieval (as in many analysis and planning tasks), with moderately trained users.

b. Natural organization of data. Query languages shall reflect a data structure or organization perceived by users to be natural. For example, if a user supposes that all data about a particular topic are stored in one place, then the query language shall permit such data to be retrieved by a single query, even though various data may be stored in different computer files.

c. Coherent representation of data organization. A single representation of the data organization for use in query formulation shall be established, i.e., the user shall not necessarily need to know if different queries will access different databases over different routes.

d. Task-oriented wording. The wording of a query shall simply specify the data being requested. Users shall not have to tell the computer how to find the data.

Downloaded from http://www.everyspec.com

e. Logic to link queries. The query language shall be designed to include logic elements that permit users to link (e.g., "and", "or") sequential queries as a single entry.

f. Confirming large-scale data retrieval. If a query will result in a large-scale data retrieval, the user shall be required to confirm the transaction or take further action to narrow the query before processing.

5.1.3.5.8 Graphic interaction. Graphic interaction design shall meet the following:

a. Use. Graphic interaction as a dialog may be considered for use by casual users to provide graphic aids as a supplement to other types of interactive control.

b. Iconic menus. When system users have different linguistic backgrounds, graphic menus may be used which display icons to represent the control options. Where the system is intended for use by foreign military personnel, icon design shall be consistent with applicable cultural and ethnic variables to ensure comprehension and to avoid potential offense.

c. Supplementary verbal labels. Where icons are used to represent control actions in menus, verbal labels shall be displayed, or made available for display, with each icon to help assure that its intended meaning will be understood.

5.1.4 Mechanical controls.

5.1.4.1 Rotary controls.

5.1.4.1.1 Discrete adjustment rotary controls. Discrete adjustment rotary controls shall meet the following:

a. Rotary selector switches. Rotary selector switches shall meet the following:

(1) Use. Rotary selector switches (see figure 6) shall be used for discrete functions when three or more detented positions are required. Rotary selection switches shall not be used for a two-position function unless prompt visual identification of control position is of primary importance and speed of control operation is not critical.

(2) Moving pointer. Rotary selector switches shall be designed with a moving pointer and a fixed scale.

(3) Shape. Moving pointer knobs shall be bar-shaped with parallel sides and their index end tapered to a point. Exceptions may be made when pointer knobs are shape-coded or when space is restricted and torque is light. Shape-coding shall be used when a group of rotary controls, used for different functions, is placed on the same panel and control confusion might otherwise result.

(4) Positions. A rotary selector switch that is not visible to the user during normal system operation shall have no more than 12 positions. A rotary switch that is constantly visible to the user shall have not more than 24 positions. Rotary switch positions shall not be placed opposite each other unless knob shape precludes confusion as to which end of the knob is the pointer. Switch resistance shall be elastic, build up, then decrease as each position is approached, so that the control snaps into position without stopping between adjacent positions.

(5) Contrast. A reference line shall be provided on rotary switch controls. The luminance contrast of this line with the control color shall be not less than 3:0 under all lighting conditions.

(6) Parallax. The knob pointer shall be mounted sufficiently close to its scale to minimize parallax between the pointer and the scale markings. When viewed from the normal user's position, the parallax errors shall not exceed 25 percent of the distance between scale markings.

(7) Attachment. Selector switch shafts and knobs shall be designed for only intended installation orientation.

(8) Dimensions, resistance, displacement, and separation. Control dimensions, resistance, displacement, and separation between adjacent edges of areas swept by rotary selector switches shall conform to the criteria in figure 6.

b. Key-operated switches (KOS). See figure 7.

(1) Use. Where security is a higher priority than speed of control actuation, KOS may be used to prevent unauthorized operation. Ordinarily, KOS control system operation by go/no-go.

(2) Dimensions, displacement, and resistance. Dimensions, displacement, and resistance shall conform to the criteria on figure 7.

Downloaded from http://www.everyspec.com

(3) Color, shape, and size coding. Color, shape, and size coding shall meet the following:

(a) Color may be used to aid in identifying various keys by function or use location and when illumination is adequate to differentiate the colors. Red (FED-STD-595/11105 or FED-STD-595/21105) shall be reserved for emergency functions.

(b) Shape coding may be used when it is desirable to identify a given key by feel. When shape coding is used, sharp corners shall be avoided.

(c) Size coding, within the height limits of figure 7, may also be used if no more than two sizes are employed.

(4) Marking and labeling. Keylock switch applications shall include appropriate position markings and labels (see 5.4).

(5) Multifunction, key-operated switches. The OFF position of multifunction, key-operated switches shall be located at 300 degrees. Total angular displacement shall be not greater than 120 degrees.

(6) Other requirements.

(a) Keys with teeth on both edges, which fit the lock with either side up or forward, are preferred.

(b) Keys with a single row of teeth shall be inserted into the lock with the teeth pointing up or forward.

(c) Locks shall be oriented so the key's vertical position is the OFF position.

(d) Users shall not be able to remove the key from the lock unless the switch is turned OFF.

(e) Actuation of an item by a key-operated switch shall be accomplished by turning the key clockwise from the vertical OFF position.

(f) Lock systems used for vehicle exterior doors shall prevent users from inadvertently locking themselves out of the vehicle.

(g) Keylocks exposed to external weather conditions shall be weatherproof.

(h) When several keylock systems are required on the same vehicle or equipment, and all locks must be accessible to the user, a single key and identical locks shall be used.

(i) When access to certain closures must be limited to people other than the user, different keylock assemblies shall be used so that the user's key will not unlock these special locks.

(j) An auditory signal shall be provided for vehicle ignition keylock systems to advise the user that the key has been left in the ignition lock after the engine has been shut off.

c. Discrete thumbwheel controls. Discrete thumbwheel controls shall meet the following

(1) Application. Thumbwheel controls may be used if the function requires a compact digital-control input device (for a series of numbers) and a readout of these manual inputs for verification. The use of thumbwheels for any other purposes is discouraged. Detent indexing units shall provide 10 positions (0 to 9) in digital or binary (3 or 4 bits and complement) outputs.

(2) Shape. Each position around the circumference of a discrete thumbwheel shall have a segmented or scalloped concave surface or shall be separated by a high-friction area which is raised from the periphery of the thumbwheel. The thumbwheels shall not preclude viewing the digits within a 30-degree viewing angle to the left and right of a perpendicular to the thumbwheel digits.

(3) Coding. Thumbwheel controls may be coded by location, labeling, and color (e.g., reversing the colors of the least significant digit wheel as on typical odometers). Where used as input devices, thumbwheel switch OFF or Normal positions shall be color coded to permit a visual check that the digits have been reset to their OFF or Normal positions.

(4) Direction of movement. Moving the thumbwheel edge forward, upward, or to the right shall increase the setting.

(5) Internal illumination. Where ambient illumination provides display brightness below 3.5 candelas per square meter (cd/m^2) (1.0 footlamberts), the thumbwheel characters shall be internally illuminated, appear against a black background, and have dimensions approximating the following: height = 4.8 millimeters (0.1875 inch), height-to-width ratio = 3:2, and height-to-stroke width ratio = 10:1.

Downloaded from http://www.everyspec.com

(6) External illumination. Characters that are externally illuminated shall be bold, black engraved on a light (or white) thumbwheel background, with dimensions in accordance with 5.1.4.1.1.c(5), except that the height-to-stroke-width ratio shall be approximately 5:1.

(7) Visibility. Thumbwheel design shall permit viewing of inline digital readout from all user positions.

(8) Dimensions. Control dimensions shall conform to the criteria on figure 8.

(9) Resistance. Detents shall be provided for discrete position thumbwheels. Resistance shall be elastic, build up, and then decrease as each detent is approached so that the control snaps into position without stopping between adjacent detents. The resistance shall be within the limits indicated on figure 8.

(10) Separation. The separation between adjacent edges of thumbwheel controls shall conform to the criteria on figure 8. Separation shall be sufficient to preclude accidental actuation of adjacent controls during normal setting.

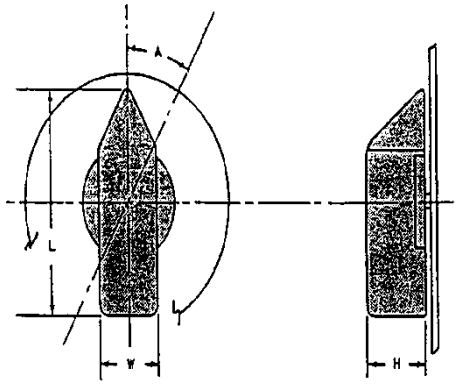

	Dimensions			Resistance
	L, Length	**W, Width**	**H, Depth**	
Minimum	25 mm (1.0 in)	--	16 mm (0.625 in)	115 mN x m (1.0 in-lb)
Maximum	100 mm (4.0 in)	25 mm (1.0 in)	75 mm (3.0 in)	680 mN x m (6.0 in-lb)
	Displacement 1/, A		**Separation**	
	--	2/	One-hand random	Two-handed operation
Minimum	262 mrad (15 deg)	525 mrad (30 deg)	25 mm (1.0 in)	75 mm (3.0 in)
Maximum	700 mrad (40 deg)	1570 mrad (90 deg)	--	--
Preferred	--	--	50 mm (2.0 in)	125 mm (5.0 in)

NOTES:

1/ For facilitating performance.

2/ When special engineering requirements demand large separation or when tactually ("blind") positioned controls are required.

FIGURE 6. Rotary selector switch.

Downloaded from http://www.everyspec.com

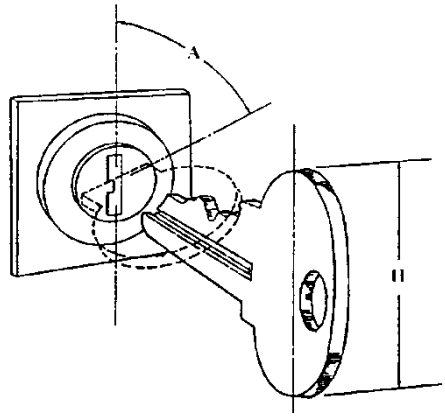

	Displacement (A)	Height (H)	Resistance
Minimum	525 mrad (30 deg)	13 mm (0.5 in)	115 mN x m (1.0 in-lb)
Maximum	1570 mrad (90 deg)	75 mm (3.0 in)	680 mN x m (6.0 in-lb)

FIGURE 7. Key-operated switch (single function).

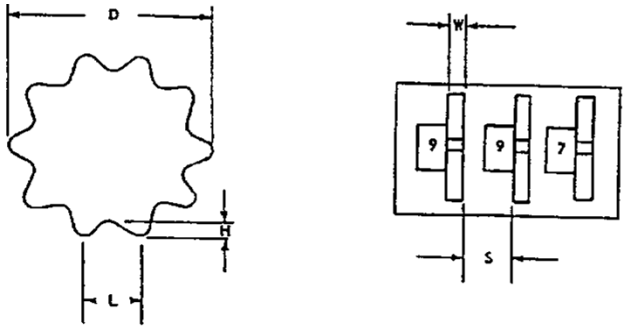

	D, Diameter	L, Trough distance	W, Width	H, Depth	S, Separation	Resistance
Minimum	29 mm (1.125 in)	11 mm (0.43 in)	3.0 mm (0.125 in)	3.0 mm (0.125 in)	10 mm (0.4 in)	1.7 N (6 oz)
Maximum	75 mm (3 in)	19 mm (0.75 in)		6.0 mm (0.25 in)		5.6 N (20 oz)

FIGURE 8. Discrete thumbwheel control.

5.1.4.1.2 Continuous adjustment rotary controls. Continuous adjustment rotary controls shall meet the following:

a. Knobs. Knob design shall meet the following:

(1) Use. Knobs shall be used when low forces or precise adjustments of a continuous variable are required. For most tasks, a moving knob with fixed scale shall be used instead of a moving scale with fixed index. If positions of single revolution controls must be distinguished, a pointer or marker shall be available on the knob.

(2) Shapes. Knobs which perform the same function shall have the same shape. Knob shape shall be determined by the knob's function and use. Representative knob shapes are shown on figure 9.

Downloaded from http://www.everyspec.com

(3) Open-window, skirted knobs. Special knob designs consisting of a bar-type knob and open-window skirt may be used for applications in which visual confusion may be reduced by exposing only one number of a scale at a time.

(4) Rims. All rotary adjustment knobs shall have rims with suitable surfaces for secure grasp. Very small knobs shall have knurled surfaces to provide maximum torquing capability. Intermediate and larger size knobs shall have serrated rims for low torque applications. Intermediate and larger size knobs shall have rim indentation rather than serration for firmer grasp for high torque applications.

(5) Twist grip controls. Handle-like rotary controls may be used for special applications (motorcycle accelerator control).

(6) Knob mounting. Rotary selector knob attachment shall preclude the possibility of the knob slipping on the shaft, and the knob being replaced with the pointing end opposite from its correct position.

(7) Contact hazard. When knobs are used in vehicles and are located where they could be contacted during the sudden deceleration of a crash, frontal surface area shall be large. All edges shall be rounded in order to minimize the potential injuries associated with small, sharp knob designs.

(8) Dimensions, torque, and separation. The dimensions of knobs shall be within the limits specified on figure 10. Within these ranges, knob size is relatively unimportant, provided the resistance is low and the knob can be easily grasped and manipulated. When panel space is extremely limited, knobs shall approximate the minimum values. Knobs shall have resistance as low as possible without permitting the setting to be changed by vibration or merely touching the control. Resistance and separation between adjacent edges of knobs shall conform to figure 10.

b. Ganged control knobs. Ganged control knobs shall meet the following:

(1) Application. Ganged knob assemblies may be used in limited applications when panel space is at a premium. Two-knob assemblies shall be used in preference over three-knob or four-knob assemblies. Three-knob configurations shall be avoided. Ganged knob configurations shall not be used under the following conditions:

(a) Extremely accurate or rapid operations are required.

(b) Frequent changes are necessary.

(c) Heavy gloves must be worn by the user.

(d) Equipment exposed to the weather or used under field conditions.

(2) Dimensions and separation. Dimensions and separation shall conform to figure 11.

(3) Resistance. Resistance shall conform to the requirements on figure 11. Knobs shall be serrated. Fine serrations shall be used on precise adjustment knobs. Coarse serrations shall be used on gross adjustment knobs.

(4) Marking. An indexing mark or pointer shall be provided on each knob. Marks or pointers shall differ sufficiently to make it apparent which knob indexing mark is being observed.

(5) Knob/display relationship. When each knob of a ganged assembly must be related to an array of visual displays, the knob closest to the panel shall relate to the left-most display in a horizontal array, or the uppermost display in a vertical array (see figure 11).

(6) Inadvertent operation. When it is critical to prevent inadvertent operation of one knob as the other is being adjusted, a secondary knob control action shall be required (e.g., pressing the top knob before it can be engaged with its control shaft). Where inadvertent movement is undesirable but not critical, knob diameter/depth relationships shall be optimized as shown on figure 11. Contrasting colors between knobs may be used to improve knob identification.

c. Continuous adjustment thumbwheel controls. Continuously adjustable thumbwheel controls may be used as an alternative to rotary knobs when the application will benefit from the compactness of the thumbwheel device.

(1) Orientation and movement. Thumbwheels shall be oriented and move in the directions specified on figure 12. If a thumbwheel is used to affect vehicle motion, movement of the thumbwheel forward or up shall cause the vehicle to move down or forward.

(2) Turning aids. The rim of a thumbwheel shall be serrated or provided with a high friction surface to aid the user in manipulating the control.

(3) Dimensions, separation, and resistance. Dimensions, separation, and resistance shall conform to criteria on figure 12.

Downloaded from http://www.everyspec.com

(4) Labeling and visibility. Marking and labeling shall conform to requirements herein, with respect to visibility of markings and legibility of label alphanumerics.

(5) OFF position. A detent shall be provided for continuous thumbwheels having an OFF position.

d. Cranks. Cranks shall meet the following:

(1) Use. Cranks shall be used for the following:

(a) Cranks shall be used for tasks that require many rotations of a control, particularly where high rates or large forces are involved.

(b) For tasks that involve large slewing movements, plus small, fine adjustments, a crank handle may be mounted on a knob or handwheel, the crank for slewing and the knob or handwheel for fine adjustments.

(c) Where cranks are used for tuning, or other processes involving numerical selection, each rotation shall correspond to a multiple of 1, 10, 100, and so forth.

(d) Simultaneously operated handcranks shall be used in preference to other two-axis controllers where extreme precision is required in setting crosshairs or reticles, as in map readouts or optical sighting mechanisms (as opposed to tracking). This type of control may also be used in other applications requiring x-y control provided there is no requirement for rapid or frequent operation.

(e) The gear ratio and dynamic characteristics of such cranks shall allow precise placement of the cursor (e.g., crosshairs) without overshooting, undershooting, or requiring successive corrective movements.

(2) Positioning. Cranks which must be turned rapidly shall be mounted so their turning axes are between 60 and 90 degrees from the body's frontal plane (see figure 13).

(3) Grip handle. The crank grip handle shall be designed so that it turns freely around its shaft.

(4) Dimensions, resistance, and separation. Dimensions, resistance, and separation between adjacent swept circular areas of cranks shall conform to the criteria on figure 13.

(5) Location. Cranks that are to be operated from a standing position shall be mounted between 900 and 1200 millimeters (35 to 47 inches) above the floor.

(6) Folding handle. If a crank handle could become a hazard to persons passing by, or if it is critical that the handle not be inadvertently displaced by being accidentally bumped, a folding handle type control shall be used. A folding handle shall be spring-loaded to keep it extended in the cranking position when in use and folded when not in use.

e. Handwheels (two-hand operated). Handwheels shall meet the following:

(1) Use. Handwheels, designed for nominal two-hand operation, shall be used when the breakout or rotational forces are too high to be easily overcome with a one-handed control, provided that two hands are available for this task. Typical applications are steering, latch securing, valve opening/closing, and direct-linkage adjustment.

(2) Turning aids. Knurling, indenting, high-friction covering, or a combination of these shall be built into the handwheel to facilitate user grasp for applying maximum torque and to reduce the possibility of the wheel being jerked from the user's hands.

(3) Spinner handles. For applications where the wheel may be rotated rapidly through several revolutions, a spinner handle may be added, except where it is vulnerable to inadvertent displacement of a critical wheel setting, or if it creates a safety hazard.

(4) Direction of movement. Except for valves (see 5.1.1.2.4), handwheels shall rotate clockwise for ON or INCREASE and counterclockwise for OFF or DECREASE. The direction of motion shall be indicated on the handwheel, or immediately adjacent thereto, by means of arrow and appropriate legends.

(5) Dimensions, resistance, displacement, and separation. Control dimensions, resistance, displacement, and separation between edges of adjacent handwheels shall conform to the criteria in table IX.

(6) Steering wheel shape. All steering wheels shall be round, except for established uses in submarines, armored combat vehicles, aircraft, and other applications where maximum wheel deflection does not exceed 120 degrees.

Downloaded from http://www.everyspec.com

(7) Power steering failure. Steering systems shall provide sufficient mechanical advantage to meet the force requirements in table IX, even when the primary operating mode is power assisted, i.e., the user shall be able to steer the vehicle to a safe stop if power fails.

(8) Steering ratio. Maximum turning limits of vehicles shall be achieved with not more than 3.5 turns of the steering wheel if consistent with force limits of table IX.

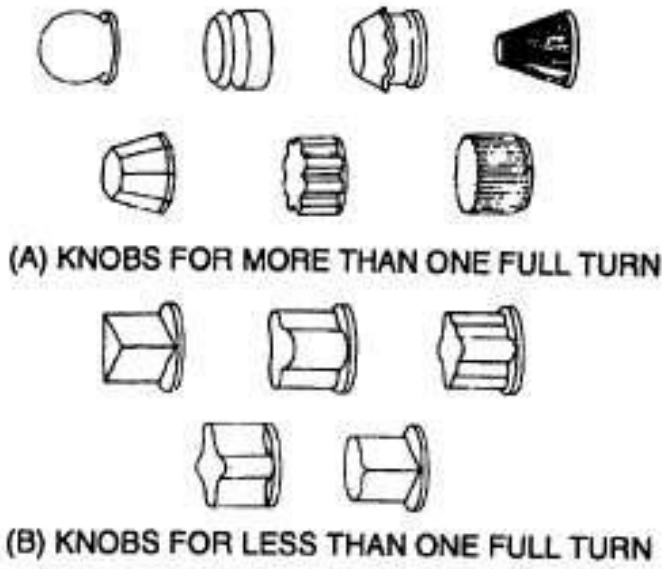

FIGURE 9. Recommended knob shapes.

Downloaded from http://www.everyspec.com

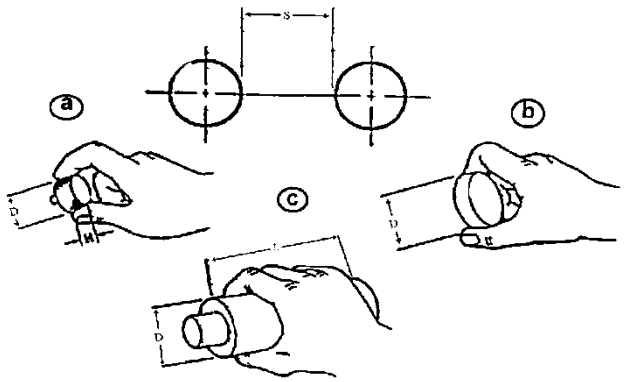

	Dimensions					
	a, Fingertip grasp		b, Thumb and finger encircled		c, Palm grasps	
	H, Height	D, Diameter	H, Height	D, Diameter	D, Diameter	L, Length
Minimum	13 mm (0.5 in)	10 mm (0.4 in)	13 mm (0.5 in)	25 mm (1.0 in)	38 mm (1.5 in)	75 mm (3.0 in)
Maximum	25 mm (1 in)	100 mm (4.0 in)	25 mm (1.0 in)	75 mm (3.0 in)	75 mm (3.0 in)	--

	Torque		Separation	
	≤25 mm (1.0 in) diameter knobs	>25 mm (1.0 in) diameter knobs	S, One hand individually	S, Two hands simultaneously
Minimum	--	--	25 mm (1.0 in)	50 mm (2.0 in)
Optimum	--	--	50 mm (2.0 in)	125 mm (5.0 in)
Maximum	32 mN x m (4.5 in – oz)	42 mN x m (6.0 in – oz)	--	--

FIGURE 10. Knobs.

Downloaded from http://www.everyspec.com

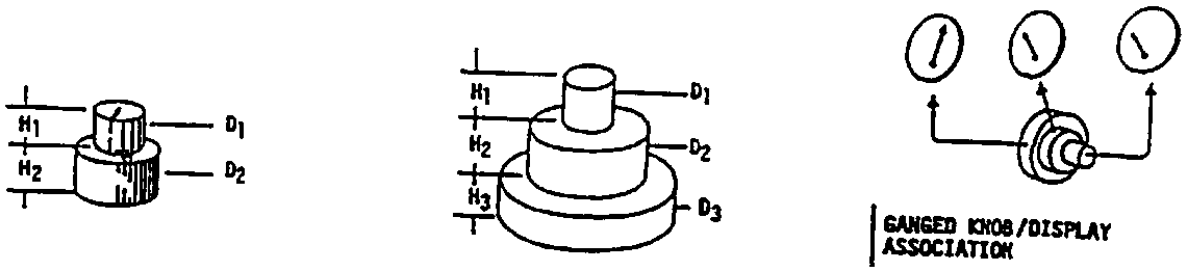

	Dimensions									
	Two knob assembly				Three knob assembly					
	H_1	H_2	D_1	D_2	H_1	H_2	H_3	D_1	D_2	D_3
Minimum	16 mm (0.625 in)	13 mm (0.5 in)	13 mm (0.5 in)	22 mm (0.875 in)	19 mm (0.75 in)	19 mm (0.75 in)	6.0 mm (0.25 in)	13 mm (0.5 in)	44 mm (1.757 in)	75 mm (3.0 in)
Maximum				100 mm (4.0 in)						100 mm (4.0 in)

	Torque		Separation			
			One hand individually		Two hands simultaneously	
	≤25 mm (1.0 in) diameter knobs	>25 mm (1.0 in) diameter knobs	Bare	Gloved	Bare	Gloved
Minimum			25 mm (1.0 in)	63 mm (2.5 in)	50 mm (2.0 in)	90 mm (3.5 in)
Optimum			50 mm (2.0 in)	90 mm (3.5 in)	75 mm (3.0 in)	100 mm (4.0 in)
Maximum	32 mN x m (4.5 in-oz)	42 mN x m (6.0 in-oz)				

FIGURE 11. Ganged knobs.

Downloaded from http://www.everyspec.com

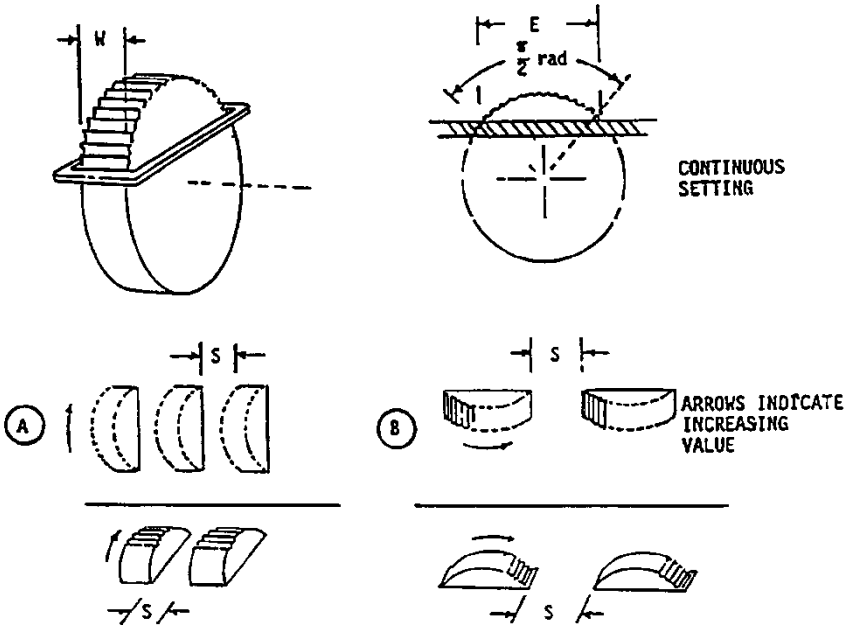

	E, Rim exposure	W, Width	S		Resistance
			A	B	
Minimum	25 mm [1/] (1.0 in)	3 mm [1/] (0.125 in)	25 mm (1.0 in), add 13 mm (0.5 in) for gloves	50 mm (2.0 in), add 25 mm (1.0 in) for gloves	To minimize effects of inadvertent input if user subject to motion
Maximum	100 mm (4.0 in)	23 mm (0.875 in)	N/A	N/A	3.3 N (12 oz)

NOTE:

[1/] Preferred. Some miniature applications may require less.

FIGURE 12. Continuous adjustment thumbwheel.

Downloaded from http://www.everyspec.com

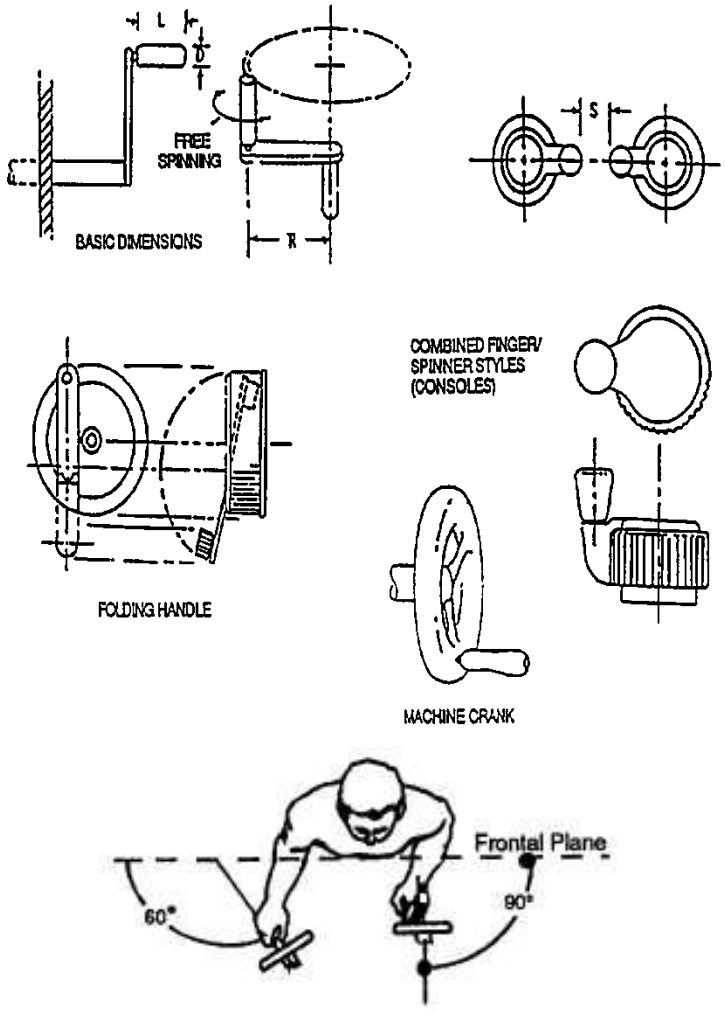

		Handle		R, Turning radius	
Loads	**Dimensions**	**L, Length**	**D, Diameter**	**Rate below 100 RPM**	**Rate above 100 RPM**
Light loads <22 N (5 lb); wrist & finger movement	Minimum	25 mm (1.0 in)	10 mm (0.4 in)	38 mm (1.5 in)	13 mm (0.5 in)
	Preferred	38 mm (1.5 in)	13 mm (0.5 in)	75 mm (3.0 in)	65 mm (2.5 in)
	Maximum	75 mm (3.0 in)	16 mm (0.625 in)	125 mm (5.0 in)	115 mm (4.5 in)
Heavy loads ≥22 N (5 lb); arm movement	Minimum	75 mm (3.0 in)	25 mm (1.0 in)	190 mm (7.5 in)	125 mm (5.0 in)
	Preferred	95 mm (3.75 in)	25 mm (1.0 in)	--	--
	Maximum	--	38 mm (1.5 in)	510 mm (20 in)	230 mm (9.0 in)

NOTE:

1. S, Separation between adjacent controls: 75 mm (3.0 in), minimum.

FIGURE 13. Cranks.

Downloaded from http://www.everyspec.com

TABLE IX. Handwheels.

Configuration example	Application criteria	Design criteria				
		Dimensions			Displacement	Separation
		Diameter	Rim diameter	Minimum hand clearance		
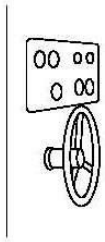	Continuous adjustment for alternate slewing/precise positioning, using display reference. Resistance low (e.g., below 110 N (25 lb)	200 – 510 mm (8.0 - 20 in)	19 – 32 mm (0.75 - 1.125 in)	75 mm (3.0 in) around rim	See control/display ratios 5.1.2.4	710 mm (28 in) elbow-elbow clearance
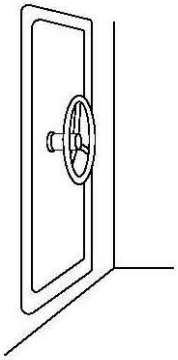	Continuous lock-unlock operation	200 mm (8.0 in) for 22 N (5.0 lb) to 510 mm (20 in) for 155 N (35 lb)	19 – 32 mm (0.75 – 1.125 in)	75 mm (3.0 in) around rim	N/A	710 mm (28 in) elbow-elbow clearance
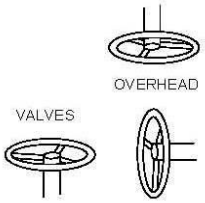	High torque valves	200 – 400 mm (8.0 – 16 in) for overhead; 200 – 510 mm (8.0 - 20 in) for other positions; 300 – 1520 mm (12 – 60 in) above standing surface	19 – 32 mm (0.75 - 1.125 in)	75 mm (3.0 in) around rim	See 5.15 when applicable	710 mm (28 in) elbow elbow clearance, 100 – 150 mm (4.0 - 6.0 in) overhead valve rim-to-rim clearance

Downloaded from http://www.everyspec.com

TABLE IX. Handwheels - Continued.

Configuration example	Application criteria	Design criteria				
		Dimensions			Displacement	Separation
		Diameter	Rim diameter	Minimum hand clearance		
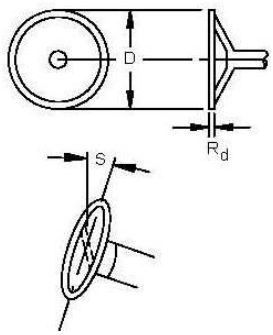	Vehicles steering (automotive) maximum resistance power steering Maximum non-power = 220 N (50 lb)	355 – 400 mm (14 - 16 in) for power steering 400 – 510 mm (16 - 20 in) for non-power steering	19 – 32 mm (0.75 - 1.125 in)	525 mrad (30 deg) for light vehicle (preferred) 785 mrad (45 deg) for heavy vehicle (preferred)	Max ±⅔π rad (120 deg) when both hands must remain on wheel	N/A
		D, grip diameter	L, grip length	X – Y, grip tilt		
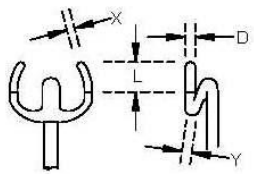	Aircraft steering (combine with lever for pitch, rudder pedals for roll/steer)	32 mm (1.125 in) preferred	100 mm (4.0 in) minimum	X = 262 mrad (15 deg) Y = 0-262 mrad (0 - 15 deg) preferred	±525 mrad (30 deg) max preferred	N/A

Downloaded from http://www.everyspec.com

5.1.4.2 Linear controls.

5.1.4.2.1 Discrete adjustment linear controls. Discrete adjustment linear controls shall meet the following:

a. Push buttons (finger- or hand-operated). Push buttons shall meet the following:

(1) Use. Push buttons shall be used when a control or an array of controls is needed for momentary contact or for actuating a locking circuit, particularly in high-frequency-of-use situations. Push buttons shall not be used for discrete control where the function's status is determined exclusively by a position of the switch, e.g., an on-off push button that is pressed in and retained to turn a circuit on and pressed again to release the push button and turn the circuit off.

(2) Shape. The push button surface shall be concave (indented) to fit the finger. When a concave surface is impractical, the surface shall provide a high degree of frictional resistance. Large hand- or fist-operated, mushroom-shaped buttons shall be used only as EMERGENCY STOP controls.

(3) Positive indication. A positive indication of control activation shall be provided (e.g., snap feel, audible click, or integral light). Tactile feedback shall be the primary form of positive indication. Other means for positive indication (e.g., audible click, light) shall be used in addition to tactile feedback and in cases where tactile feedback is not possible.

(4) Channel or cover guard. A channel or cover guard shall be provided when accidental actuation of the control must be prevented. When a cover guard is in the open position, it shall not interfere with operation of the protected device or adjacent controls.

(5) Dimensions, resistance, displacement, and separation. Except for use of push buttons in keyboards, control dimensions, resistance, displacement, and separation between adjacent edges of finger- or hand-operated push buttons shall conform to the criteria on figure 14.

(6) Interlocks or barriers. Mechanical interlocks or barriers may be used instead of the spacing required by figure 14.

b. Foot-operated switches.

(1) Use. Foot-operated switches shall be used only where the user is likely to have both hands occupied when switch actuation may be required, or when load sharing among limbs is desirable. Because foot-operated switches are susceptible to accidental actuation, their uses shall be limited to noncritical or infrequent operations such as press-to-talk communication.

(2) Operation. Foot switches shall be positioned for operation by the toe and the ball of the foot rather than by the heel. They shall not be located so near an obstruction that the user cannot center the ball of the foot on the switch button. A pedal may be used over the button to aid in locating and operating the switch. If the switch may become wet and slippery, the switch cap surface shall provide a high degree of frictional resistance.

(3) Dimensions, resistance, and displacement. Dimensions, resistance, and displacement of foot-operated switches shall conform to the criteria on figure 15. While only one switch per foot is preferred, when one foot must be used to operate more than one switch, such switches shall be at least 75 millimeters (3 inches) apart (horizontal); 200 millimeters (8 inches) apart (vertical).

(4) Feedback. A positive indication of control actuation shall be provided (e.g., snap feel, audible click, or associated visual or audio display).

c. Toggle switch controls. Toggle switches are discrete position controls. For small controls that are the same size and shape as toggle switches, but used for making continuous adjustments, see 5.1.4.2.2.

(1) Use. Toggle switches shall be used where two discrete control positions are required or where space limitations are severe. Toggle switches with three positions shall be used only where the use of a rotary control or legend switch control is not feasible or when the toggle switch is spring-loaded to a center-off position. Three-position toggle switches, spring-loaded to center-off from only one other position, shall not be used if release from the spring-loaded position results in switch handle travel beyond the off position.

Downloaded from http://www.everyspec.com

(2) Accidental actuation. When preventing accidental actuation is important (i.e., critical or hazardous conditions would result), channel guards, lift-to-unlock switches, or other equivalent prevention mechanisms shall be provided. Safety or lock wire shall not be used. Resistance of lift-to-unlock mechanisms shall not exceed 13 Newtons (3.0 pounds of force). An open cover guard shall not interfere with the operation of the protected device or adjacent controls.

(3) Dimenstions, resistance, displacement, and separation. Dimensions, resistance, displacement, and separation between adjacent edges of toggle switches shall conform to figure 16. Resistance shall gradually increase, then drop when the switch snaps into position. The switch shall not be capable of being stopped between positions.

(4) Positive indication. An indication of control actuation shall be provided (e.g., snap feel, audible click, or associated or integral light).

(5) Orientation. Toggle switches shall be vertically oriented with OFF in the down position. Horizontal orientation and actuation of toggle switches shall be used only for compatibility with the controlled function or equipment location.

d. Legend switches. Legend switches shall meet the following:

(1) Use. Legend switches are particularly well-suited to the conditions listed below:

(a) To display qualitative information on an important system status which requires the user's attention.

(b) To reduce demands for the user to interpret information.

(c) When functional grouping or a matrix of control switches and indicators is required but space is very limited.

(2) Characteristics. Characteristics of legend switches shall meet the following:

(a) Location. Legend switches shall be located within a 30-degree cone (total included angle) along the user's normal line of sight.

(b) Positive feedback. For positive feedback that the switch has operated, legend switches shall have a detent or a click.

(c) Lamp replacement. Legend switch lamps shall be replaceable from the front of the panel.

(d) Legibility. Legends shall be legible with or without internal illumination.

(e) Lamp test. If legend switches do not have duplicate bulbs, dual filament, or equivalent reliability, the legend switch circuit shall permit a positive test of the lamp.

(f) Lamp reliability. A lamp test or dual lamp/filament reliability shall be provided for switches if the mean time between failure is less than 100,000 hours.

(3) Dimensions, resistance, displacement, and separation. Dimensions, resistance, displacement, and separation between adjacent edges of legend switches shall conform to the criteria on figure 17, except that maximum switch separation does not apply to non-matrix applications.

(4) Barriers. Barriers shall meet the following:

(a) Barrier height. Barrier height from panel surface shall conform to figure 17.

(b) Critical switches. Unless otherwise specified (see 6.2), barriers shall be provided on critical switches and on switches likely to be inadvertently actuated.

(c) Visual access. Barriers, when used, shall not obscure visual access to controls, labels, or displays.

(d) Rounded edges. Barriers shall have rounded edges.

(5) Other legend switch requirements. When touch-sensitive switches are used, a positive indication of actuation shall be provided, e.g., an integral light within or above the switch being actuated. The legends or covers shall be keyed to prevent the possibility of interchanging the legend covers. A legend plate shall not contain more than three lines of lettering. Legend switches shall be distinguishable from legend lights.

Downloaded from http://www.everyspec.com

e. Rocker switches. Rocker switches shall meet the following:

(1) Use. Rocker switches may be used in lieu of toggle switches for functions requiring two discrete positions. They may be used for applications where toggle switch handle protrusions might snag the user's sleeve or phone cord, or where there is insufficient panel space for separate labeling of switch positions. Rocker switches with three positions shall be used only where the use of a rotary control or legend switch control is not feasible or when the rocker switch is of the spring-loaded center-off type.

(2) Accidental actuation. When accidental actuation must be prevented to avoid critical or hazardous conditions, channel guards or equivalent protection shall be provided.

(3) Positive indication. An indication of control actuation shall be provided (e.g., snap feel, audible click, associated or integral light).

(4) Dimensions, resistance, displacement, and separation. Dimensions, resistance, displacement, and separation between centers of rocker switches shall conform to figure 18. Resistance shall gradually increase, then drop when the switch snaps into position. The switch shall not be capable of being stopped between positions.

(5) Orientation. Where practicable, rocker switches shall be vertically oriented. Actuation of the upper wing shall turn the equipment or component on, cause the quantity to increase, or cause the equipment or component to move forward, clockwise, to the right, or up. Horizontal orientation of rocker switches shall be employed only for compatibility with the controlled function or equipment location.

(6) Color and illumination. Alternate colors may be used to denote the ON and OFF portions of a rocker switch. Alternate illumination of either the ON or OFF switch position may be used to facilitate positive recognition of current switch position. For other color-coding, see 5.2.2.3.2. Where ambient illumination will provide display luminance below 3.5 cd/m² (1 footlambert), the rocker switch shall be internally illuminated. Digits and letters shall appear as illuminated characters on an opaque background. The dimensions shall approximate the following: height: 4.8 millimeters (0.1875 inch); height-to-width ratio: 3:2; height-to-stroke-width ratio: 10:1.

f. Slide switch controls. Slide switch controls shall meet the following:

(1) Use. Slide switch controls may be used for functions which require two discrete positions. Slide switch controls may also be used for functions which require a higher number of discrete positions in which the switches are arranged in a matrix to permit easy recognition of relative switch settings (e.g., audio settings across frequencies), but shall not be used where mispositioning shall be avoided.

(2) Accidental actuation.

(3) Dimensions, resistance, and separation. Dimensions, resistance, and separation of slide switch handles shall conform to criteria on figure 19. Detents shall be provided for each control setting. Resistance shall gradually increase, then drop when the switch snaps into position. The switch shall not be capable of stopping between positions.

(4) Orientation. Slide switches shall be vertically oriented with movement of the slide up or away from the user turning the equipment or component on, causing a quantity to increase, or causing the equipment or component to move forward, clockwise, to the right, or up. Horizontally oriented or actuated slide switches shall be used only for compatibility with the controlled function or equipment location.

(5) Positive indication. Slide switches with more than two positions shall provide positive indication of control setting, preferably a pointer located on the left side of the slide handle.

g. Discrete push-pull controls. Discrete push-pull controls shall meet the following:

(1) Applications. Push-pull controls may be used when two discrete functions are to be selected. However, such applications shall be used sparingly and for applications in which such configurations are typically expected. Push-pull controls may be used in certain cases where limited panel space suggests a miniaturized knob that may be used to serve two related, but distinct functions (e.g., an ON-OFF volume switch for a TV monitor). A three-position push-pull control may be used only where inadvertently selecting the wrong position has no serious consequences (e.g., older vehicle headlight controls—OFF/PARK/HEADLIGHT—with integrated rotary panel light and dome light switches).

(2) Handle dimensions, displacement, and clearances. Push-pull control handles shall conform to the criteria in table X.

Downloaded from http://www.everyspec.com

(3) Rotation. Except for combination push-pull/rotate switch configurations (e.g., the handle is rotated to disengage the brake setting), push-pull control handles shall be keyed to a non-rotating shaft. When the control system provides a combination push-pull/rotate functional operation, using a round-style knob, the rim of the knob shall be serrated to denote (visually and tactually) that the knob can be rotated, and to facilitate a slip-free finger grip.

(4) Detents. Mechanical detents shall be incorporated into push-pull controls to provide tactile indication of positions.

(5) Snagging and inadvertent contact. Use, location, and operating axis of push-pull type controls shall preclude the possibility of the user accidentally doing any of the following:

(a) Bumping a control while getting into or out of position (as in a vehicle).

(b) Snagging clothing, communication cables, or other equipment items on the control.

(c) Inadvertently deactuating the control setting while reaching for another control.

(6) Direction of control motion. A pull towards the user shall produce ON or activate. Push away shall correspond to OFF or deactivate. A rotation clockwise shall activate or increase a function of combination pull/rotary switches.

(7) Resistance. Force for pulling a panel control with fingers shall be not more than 18 Newtons (4.0 pounds of force). Force for pulling a T-bar with four fingers shall be not more than 45 Newtons (10 pounds of force).

h. Printed circuit (PC) switch controls. PC switch controls shall meet the following:

(1) Use. PC “DIP” type switches or hand-selected jumpers shall be installed only for settings that require infrequent changes.

(2) Dimensions, resistance, displacement, and separation. PC switch controls shall meet the following:

(a) Actuators shall be sufficiently large to permit error-free manipulation by the user when using commonly available styluses (e.g., pencil or pen).

(b) The actuators shall not require the use of a special tool for manipulation.

(c) Resistance shall be sufficiently high to avoid inadvertent actuation under expected use conditions.

(d) Resistance shall gradually increase, then drop when the actuator snaps into position.

(e) The actuator shall not be capable of stopping between positions.

(f) Slide-type actuators shall have sufficient travel (displacement) to permit immediate recognition of the switch setting.

(g) The travel shall be not less than twice the actuator length.

(h) When actuators are rocker-type, the actuated wing shall be flush with the surface of the module.

(i) Actuators shall have sufficient separation to permit error-free manipulation by the user (i.e., the stylus cannot inadvertently contact adjacent actuators).

(3) Shape. The surface of the actuator shall be indented to accept the point of the stylus. The indentation shall be sufficiently deep to avoid slippage of the stylus during manipulation.

Downloaded from http://www.everyspec.com

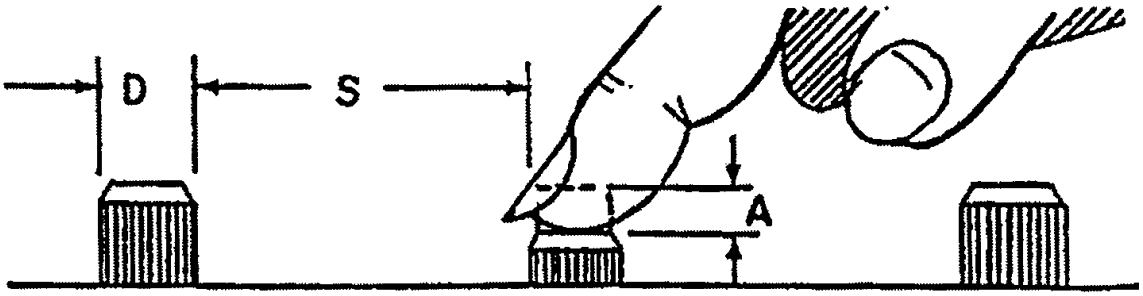

	Dimensions (D, Diameter)						Resistance		
	Fingertip		Thumb		Palm				
	Bare hand	Gloved hand 1/	Bare hand	Gloved hand 1/	Bare hand	Gloved hand 1/	Single finger	Different fingers 2/	Thumb/palm
Minimum	10 mm (0.4 in)	19 mm (0.75 in)	19 mm (0.75 in)	25 mm (1.0 in)	40 mm (1.6 in)	50 mm (2.0 in)	2.8 N (10 oz)	1.4 N (5 oz)	2.8 N (10 oz)
Maximum	25 mm (1.0 in)	--	25 mm (1.0 in)	--	70 mm (2.8 in)	--	11.0 N (40 oz)	5.6 N (20 oz)	23.0 N (80 oz)

	Displacement (A)	
	Fingertip	Thumb or palm
Minimum	2.0 mm (0.08 in)	3.0 mm (0.12 in)
Maximum	6.0 mm (0.25 in)	38 mm (1.5 in)

	Separation (S)				
	Single finger		Single finger sequential 3/	Different finger 3/	Thumb or palm 3/
	Bare	Gloved			
Minimum	13 mm (0.5 in)	25 mm (1.0 in)	6.0 mm (0.25 in)	6.0 mm (0.25 in)	25 mm (1.0 in)
Preferred	50 mm (2.0 in)	--	13 mm (0.5 in)	13 mm (0.5 in)	150 mm (6.0 in)

FOOTNOTES:

1/ For standard cotton flame-resistant anti-flash gloves (i.e., Navy flash gloves (as defined in MIL-G-2874E)), add 5.0 mm (0.2 in) to Diameter (D) of bare hand dimension.

2/ Actuated at same time.

3/ Where gloved hand criteria are not provided, minimum shall be suitably adjusted.

NOTE:

1. Figure 14 does not apply to keyboards (see 5.1.3.2).

FIGURE 14. Push button (finger- or hand-operated).

Downloaded from http://www.everyspec.com

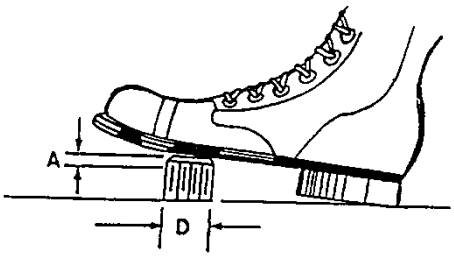

	Diameter (D)	Resistance		Displacement (A)			
		Foot will NOT rest on control	**Foot WILL rest on control**	**Normal operation**	**Heavy boot operation**	**Ankle flexion only**	**Total leg movement**
Minimum	13 mm (0.5 in)	18 N (4.0 lb)	45 N (10 lb)	13 mm (0.5 in)	25 mm (1.0 in)	25 mm (1.0 in)	25 mm (1.0 in)
Maximum		90 N (20 lb)	90 N (20 lb)	65 mm (2.5 in)	65 mm (2.5 in)	65 mm (2.5 in)	100 mm (4.0 in)

FIGURE 15. Foot-operated switches.

Downloaded from http://www.everyspec.com

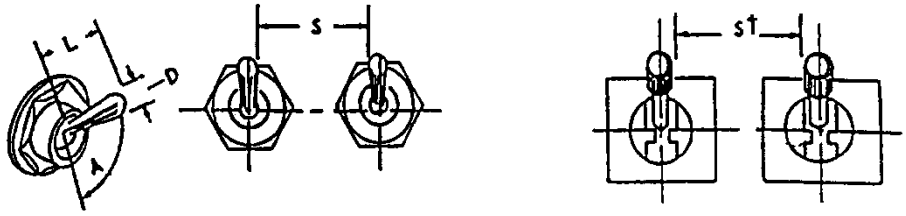

	Dimensions			Resistance	
	Arm length (L)		Control Tip (D)	Small switch	Large switch
	Use by bare finger	Use with heavy handwear			
Minimum	13 mm (0.5 in)	38 mm (1.5 in)	3.0 mm (0.125 in)	2.8 N (10 oz)	2.8 N (10 oz)
Maximum	50 mm (2.0 in)	50 mm (2.0 in)	25 mm (1.0 in)	4.5 N (16 oz)	11 N (40 oz)

	Displacement between positions	
	Two positions	Three positions
Minimum	30 deg	17 deg
Maximum	80 deg	40 deg
Preferred	--	25 deg

	Separation (S)			
	Single finger operation		Single finger sequential operation	Simultaneous operation by different fingers
	Normal	Lever lock switch		
Minimum	19 mm (0.75 in)	25 mm (1.0 in)	13 mm (0.5 in)	16 mm (0.625 in)
Optimum	50 mm (2.0 in)	50 mm (2.0 in)	25 mm (1.0 in)	19 mm (0.75 in)

FIGURE 16. Toggle switches.

Downloaded from http://www.everyspec.com

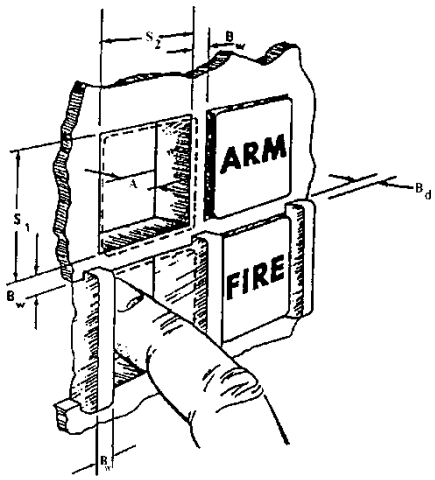

	Size (S_1 and S_2)		Barriers	
	Bare hand	**Gloved hand** [1/]	**Width (Bw)** [2/]	**Depth (Bd)**
Minimum	19 mm (0.75 in) [3/]	25 mm (1.0 in)	3.0 mm (0.125 in)	5.0 mm (0.2 in)
Maximum	--	38 mm (1.5 in)	--	--

	Displacement		
	Standard legend switch	**Membrane/tactile legend switch**	
		Dome snap-action contact	**Conductive membrane contact**
Minimum	3.0 mm (0.125 in)	7.0 mm (0.3 in)	5.0 mm (0.02 in)
Maximum	6.0 mm (0.25 in)	1.0 mm (0.04 in)	1.0 mm (0.04 in)

	Resistance		
	Standard legend switch	**Membrane/tactile legend switch**	
		Dome snap-action contact	**Conductive membrane contact**
Minimum	2.8 N (10 oz) [4/]	1.5 N (5.0 oz)	2.0 N (7.0 oz)
Maximum	16.7 N (60 oz)	2.5 N (9.0 oz)	3.0 N (11 oz)

NOTES:

1/ For standard cotton flame-resistant anti-flash gloves (i.e., Navy flash gloves (as defined in MIL-G-2874E)), add 5.0 mm (0.2 in) to bare hand dimension for S1 and S2.

2/ Bw also refers to switch separation.

3/ 15 mm (0.65 in) where switch is not depressed below the panel.

4/ 5.6 N (20 oz) for use in moving vehicles.

FIGURE 17. Legend switch.

Downloaded from http://www.everyspec.com

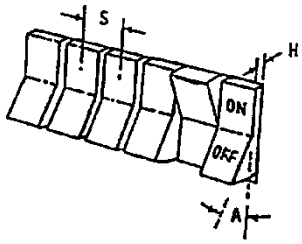

STANDARD ROCKER SWITCH: USE AS ALTERNATE TWO-POSN TOGGLE SWITCH TO PROVIDE LABELING SURFACE, EASE OF COLOR CODING, SWITCH ILLUMINATION.

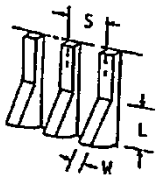

NARROW WIDTH, ESPECIALLY DESIRABLE FOR TACTILE DEFINITION WITH GLOVES.

ALTERNATE (CONTRAST) COLOR FOR ON VERSUS OFF TO PROVIDE CONSPICUOUS CUE OF SWITCH POSITION. ILLUMINATED "ON" DESIRABLE AS SECOND FEEDBACK CUE.

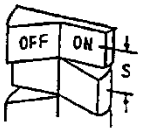

	Dimensions		Resistance
	W, Width	**L, Length**	
Minimum	6.0 mm (0.25 in)	13 mm (0.5 in)	2.8 N (10 oz)
Maximum			11 N (40 oz)

	Displacement		Separation (center-to-center)	
	H, Depressed	**A, Angle**	**S (bare hand)**	**S (gloved hand)**
Minimum	3.0 mm (0.125 in)	530 mrad (30 deg)	19 mm (0.75 in)	32 mm (1.125 in)

FIGURE 18. Rocker switches.

Downloaded from http://www.everyspec.com

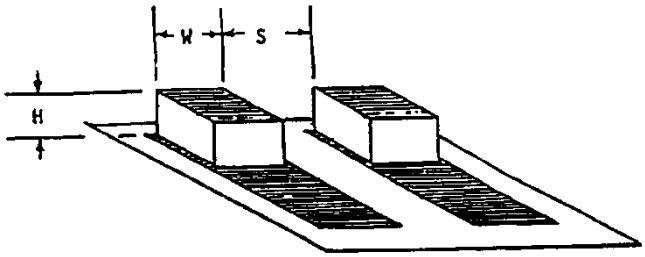

	Dimensions			Resistance	
	H, Actuator height		W, Actuator width	Small switch	Large switch
	Use by bare finger	Use with heavy handwear			
Minimum	6.0 mm (0.25 in)	13 mm (0.5 in)	6.0 mm (0.25 in)	2.8 N (10 oz)	2.8 N (10 oz)
Maximum	--	--	25 mm (1.0 in)	4.5 N (16 oz)	11 N (40 oz)

	Separation (S)		
	Single finger operation	Single finger sequential operation	Simultaneous operation by different fingers
Minimum	19 mm (0.75 in)	13 mm (0.5 in)	16 mm (0.625 in)
Optimum	50 mm (2.0 in)	25 mm (1.0 in)	19 mm (0.75 in)

FIGURE 19. Slide switches.

Downloaded from http://www.everyspec.com

TABLE X. Push-pull controls.

Configuration example	Application criteria	Design criteria				
		Dimensions			Displacement	Separation
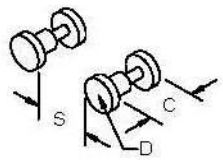	Push-pull control, low resistance, for two position, mechanical or electrical systems. Alternate three position plus rotary function acceptance for application such as vehicle headlight plus parking lights, panel, and dome lights provide serrated rim.	D, minimum diameter: 19 mm (0.75 in).	C, minimum clearance: 25 mm (1.0 in). Add 13 mm (0.5 in) for gloved hand.		25±13 mm (1.0±0.5 in). Minimum between pull positions: 13 mm (0.5 in).	S, minimum space between: 35 mm (1.5 in). Add 13 mm (0.5 in) for gloved hand.
	Alternate handle; miniature electrical panel switch only. Avoid glove use application.	D, minimum diameter: 6.0 mm (0.25 in).	N/A	L, minimum length: 19 mm (0.75 in).	Minimum: 13 mm (0.5 in).	S, minimum space between: 25 mm (1.0 in).
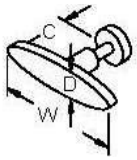	High-force push-pull, for two-position mechanical system only.	W, minimum width: 100 mm (4.0 in).	D, depth: 16 - 38 mm (0.625 – 1.5 in).	C, minimum clearance: 38 mm (1.5 in). Add 6.0 mm (0.25 in) for gloved hand.	Minimum: 25 mm (1.0 in). Preferred: 50 mm (2.0 in).	
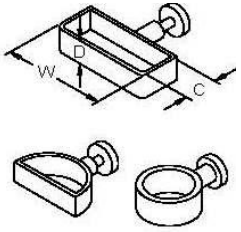	Same as above. Preferred where possible garment or cable-snag possibility exists. Note: 1 & 2 finger pulls also acceptable for less than 18 N (4.0 lb) applications.	W, minimum width: 100 mm (4.0 in). Add 25 mm (1.0 in) for gloves.	D, depth: 16 - 32 mm (0.625 - 1.25 in).	C, minimum clearance: 32 mm (1.25 in).	Minimum: 25 mm (1.0 in). Preferred: 50 mm (2.0 in).	S, minimum space between: 13 mm (0.5 in).

Downloaded from http://www.everyspec.com

5.1.4.2.2 Continuous adjustment linear controls. Continuous adjustment linear controls shall meet the following:

a. Levers.

(1) Use. Levers may be used when high forces or large displacements are involved or when multidimensional movements of controls are required.

(2) Coding. When several levers are grouped near each other, the lever handles shall be coded.

(3) Labeling. When practicable, all levers shall be labeled as to function and direction of motion.

(4) Limb support. When levers are used to make fine or continuous adjustments, support shall be provided for the appropriate limb segment as follows:

(a) For large hand movements – elbow.

(b) For small hand movements – forearm.

(c) For finger movements – wrist.

(5) Dimensions. The length of levers shall be determined by the mechanical advantage needed. The diameter of spherical lever or grip handles shall conform to the criteria on figure 20 and table XI.

(6) Resistance. Lever resistance shall be within the limits indicated on figure 20, measured as linear force applied to a point on the handle. [NOTE: The right hand can supply slightly more force than the left, but the difference is not significant.] The same amount of push-pull force can be applied when the control is along the median plane of the body as when it is directly in front of the arm, 180 millimeters (7.0 inches) from the median plane. When the control is in front of the opposite (unused) arm only 75 percent as much force can be applied. When the control is 250 to 480 millimeters (10 to 19 inches) forward of the neutral seat reference point, twice as much push-pull force can be applied with two hands as with one hand. Outside this range two-hand operation becomes less effective.

(7) Displacement and separation. Control displacement (for the seated user) and separation shall conform to figure 20.

(8) Location, position, direction, and range of movement. The location, position relative to the user, and direction and range of lever movement shall be compatible with user reach, mobility, natural movements, and strength capabilities. When high forces are required of the user, the lever handle shall be located between waist and shoulder levels. For high-force applications the force will typically be applied in a pulling direction.

(9) Detents. When levers are used as “selector” controllers, mechanical detents shall be provided (in addition to panel labels or markings) to provide tactile feedback indicating that the lever is positively positioned at designated settings. Detents and panel markings shall coincide precisely.

(10) Nonslip handles. Surfaces of lever handles shall provide sufficient friction (by means of the specific material used, or addition of serrations or knurling) to reduce the probability of the user’s hand or fingers slipping while operating the lever.

b. Pedals.

(1) Use. Pedal controls shall be used only where the user is likely to have both hands occupied when control operation is required, control system force is too high for manual force capability of the user, or standardized use of pedals has created a stereotype expectancy (e.g., vehicle pedal controls such as clutches, brakes, accelerators, and rudders).

(2) Location.

(a) Pedal control location. Pedal controls shall be located so that the user can reach them easily without extreme stretching or torso twisting and can reach the maximally-displaced pedals within anthropometric limits and force-capabilities (see figure 21).

(b) Foot and heel placement. Pedals that may be held or must be adjusted (e.g., accelerator, clutch) shall be located so the user can “rest” and “steady” the foot, i.e., the pedal shall be an appropriate critical distance above the floor so the user's heel can rest on the floor while articulating the ankle/foot. When this cannot be done and the pedal angle is more than 20 degrees from the horizontal floor, a heel rest shall be provided.

Downloaded from http://www.everyspec.com

(3) Control return. Except for controls which generate a continuous output (e.g., rudder controls), pedals shall return to the original null position without requiring assistance from the user (e.g., brake pedal). Where the user's foot may normally rest on the pedal between operations, sufficient resistance shall be provided to prevent the weight of the foot from inadvertently actuating the control (e.g., accelerator pedal).

(4) Pedal travel path. The travel path shall be compatible with the natural articulation path of the user's limbs (i.e., thigh, knee, ankle).

(5) High-force application aids. When high forces are required to fully actuate a pedal, appropriate aids shall be provided to assist the user in applying maximum force, e.g., (a) seat backrest, (b) double-width pedal so that both feet can be used, (c) optimized seat height-to-pedal and normal reach distance for maximum force, where the seat reference point and pedal are at the same height and reach distance is configured so the angle between the upper thigh and lower leg is approximately 160 degrees (see figure 22).

(6) Non-slip pedal surface. Pedals used for high-force applications shall be provided with a nonskid surface. Similar surfaces are desirable for all pedals.

(7) Dimensions, resistance, displacement, and separation. Dimensions, resistance, displacement, and separation of pedals shall conform to the criteria on figure 21.

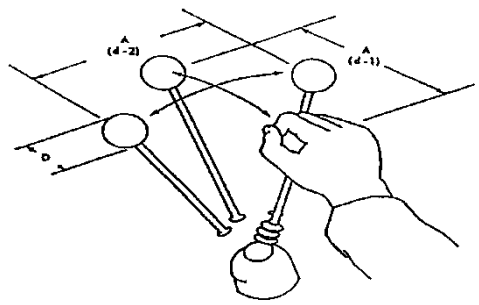

	Diameter		Resistance			
	D		(d-1)		(d-2)	
	Finger grasp	hand grasp	One hand	Two hands	One hand	Two hands
Minimum	13 mm (0.5 in)	38 mm (1.5 in)	9.0 N (2.0 lb)	9.0 N (2.0 lb)	9.0 N (2.0 lb)	9.0 N (2.0 lb)
Maximum	38 mm (1.5 in)	75 mm (3.0 in)	135 N (30 lb)	220 N (50 lb)	90 N (20 lb)	135 N (30 lb)

	Displacement (A)		Separation	
	Forward (d-1)	Lateral (d-2)	One hand, random	Two hands, simultaneously
Minimum	--	--	50 mm (2.0 in)	75 mm (3.0 in)
Preferred	--	--	100 mm (4.0 in)	125 mm (5.0 in)
Maximum	360 mm (14 in)	970 mm (38 in)	--	--

FIGURE 20. Lever.

Downloaded from http://www.everyspec.com

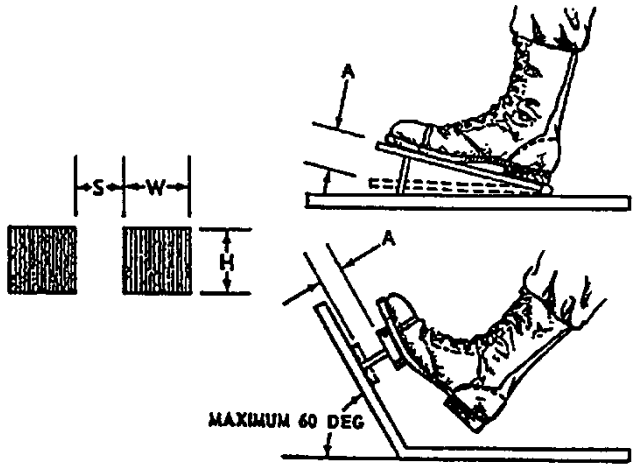

	Dimensions		Displacement			
	H, Height	**W, Width**	**Normal operation**	**Heavy boots**	**Ankle flexion**	**Total leg movement**
Minimum	25 mm (1.0 in)	75 mm (3.0 in)	13 mm (0.5 in)	25 mm (1.0 in)	25 mm (1.0 in)	25 mm (1.0 in)
Maximum	--	--	65 mm (2.5 in)	65 mm (2.5 in)	65 mm (2.5 in)	180 mm (7.0 in)

	Resistance			
	Foot not resting on pedal	**Foot resting on pedal**	**Ankle flexion only**	**Total leg movement**
Minimum	18 N (4 lb)	45 N (10 lb)	--	45 N (10 lb)
Maximum	90 N (20 lb)	90 N (20 lb)	45 N (10 lb)	800 N (180 lb)

	Separation (S)	
	One foot random	**One foot sequential**
Minimum	100 mm (4.0 in)	50 mm (2.0 in)
Maximum	150 mm (6.0 in)	100 mm (4.0 in)

FIGURE 21. Pedals.

Downloaded from http://www.everyspec.com

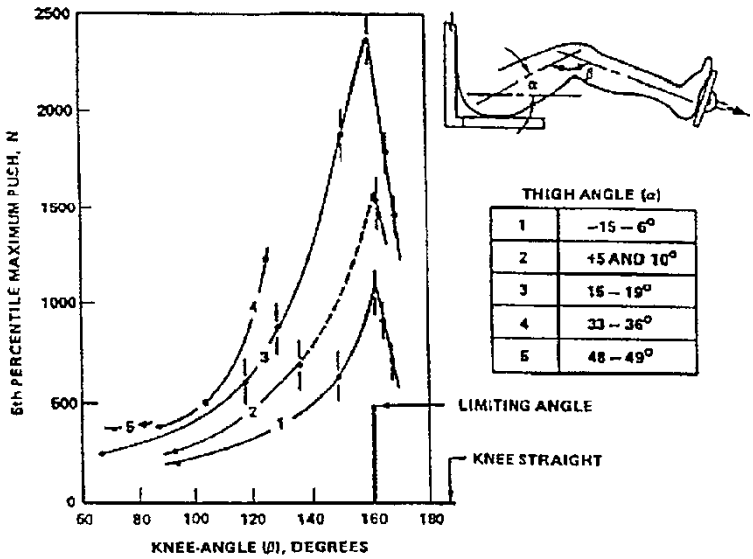

FIGURE 22. Leg strength at various knee and thigh angles (5th percentile male data).

Downloaded from http://www.everyspec.com

TABLE XI. Levers.

Configuration example	Application guidelines	Dimensions			Separation	Displacement
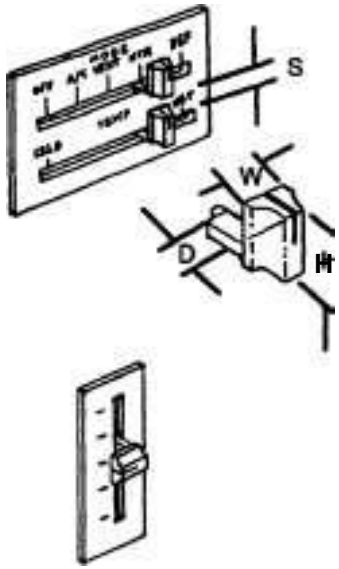	Slide-levers may be used for low-force, continuous-adjustment, or gross-mode selection (do not use for precise setting). Handles shall be "tab-shaped", with long dimension perpendicular to motion axis (to serve as a pointer). Movement axis may be up-down, lateral, or fore-aft. Functional increase shall be: -Up -Right -Forward	D, minimum: 13 mm (0.5 in) (19 mm (0.7 in) with gloves)	W, minimum: 6.5 mm (0.25 in)	H, minimum: 16 mm (0.63 in)	S, minimum: 19 mm (25 mm with gloves)	
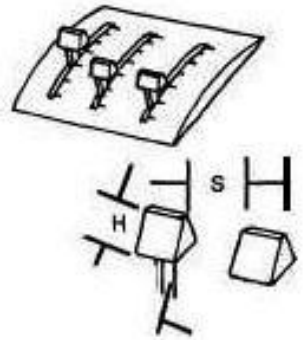	Banked, slide-lever assemblies may be used for electrically- or mechanically-connected selector or adjustment functions to provide rapid visual check of related settings. NOTE: Resistance for above control types shall be: Min: 2.8 N (10 oz) Max: 110 N (25 lb)	D, minimum: 13 mm (0.5 in) (19 mm (0.7 in) with gloves)	W, minimum: 6.5 mm (0.25 in)	H, minimum: 16 mm (0.63 in)	S, minimum: 19 mm (0.7 in) (25 mm (0.9 in) with gloves)	

Downloaded from http://www.everyspec.com

TABLE XI. Levers – Continued.

Configuration example	Application guidelines	Dimensions			Separation	Displacement
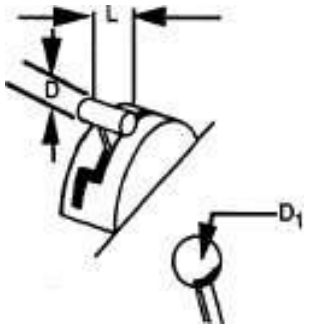	Throttle levers: Handgrip may be either cylindrical or spherical.	D, minimum: 19 mm (0.7 in); maximum: 28 mm (1.1 in). D_1: 38±6 mm (1.5±0.23 in)	L, minimum: 65 mm (2.3 in)		Finger clearance all sides, minimum 50 mm (1.9 in)	
	Multi-engine throttle assembly: NOTE: When thrust reverse is incorporated, the design shall include a separate manipulative motion (lift + aft lever movement).				S, typical 100 mm (3.3 in), not to exceed 125 mm (4.9 in)	
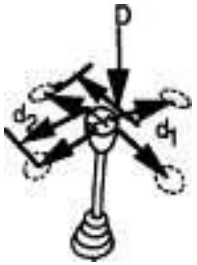	Gear-shift lever: Manual transmission: Locate for right-hand operation. Resistance: approximately 9.0 – 13 N (32 – 47 oz)	D, knob diameter: 32 mm (1.2 in)				D_1 and D_2 between discrete positions: minimum 125 mm (4.9 in), maximum 200 mm (7.9 in)

Downloaded from http://www.everyspec.com

TABLE XI. Levers – Continued.

Configuration example	Application guidelines	Dimensions			Separation	Displacement
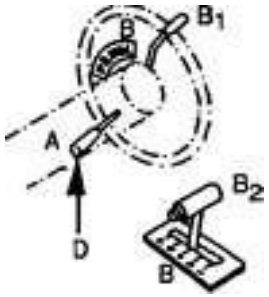	Automatic transmission: (B_1 preferred; B_2 acceptable). Detented positions required* A. Other functions: 1. Turn signal: rotate about column; CW: right turn, CCW: left turn. 2. Headlight dimming; lever moves toward bottom of column for "dim". B. Letters shall illuminate to indicate position of lever. Resistance: approximately 4.5– 45 N (16 oz – 10 lb). *It shall be impossible to leave gear lever between positions. Separate motion required to position lever in reverse (lift or press thumb button).	D, handle diameter 19 – 32 mm (0.7 – 1.2 in) if cylindrical. 25 - 32 mm (0.9 – 1.2 in) if spherical.			Finger clearance between levers and wheel rim: minimum 50 mm (2.0 in)	Gear shift minimum between positions: B_1: 25 mm (0.9 in) B_2: 38 mm (1.4 in) 25 – 50 mm (0.9 – 1.9 in) between detents recommended.

Downloaded from http://www.everyspec.com

TABLE XI. Levers – Continued.

Configuration example	Application guidelines	Dimensions			Separation	Displacement
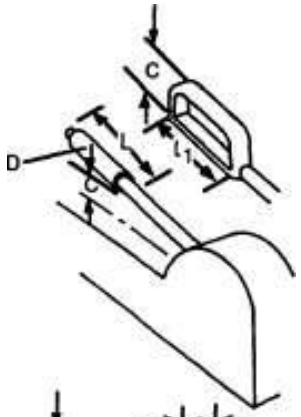	Hand brake, with thumb-button release L1 – Loop handle acceptable	D, Diameter: 25 - 32 mm (0.9 – 1.2 in)	L, Length, minimum: 100 mm (3.9 in) L, Length, minimum: 115 mm (4.5 in)	C, Clearance, minimum: 50 mm (1.9 in)	Minimum: 65 mm (2.6 in) All sides of handle	Nominal: 100 - 125 mm (3.9 – 4.9 in)
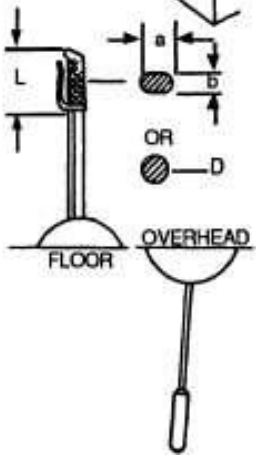	High-force levers: Center of handle shall be approximately 230 – 255 mm (9.0 – 10 in) laterally from user centerline, at elbow level. Provide clip-type release where applicable. Round or oval-shaped handle shall be used. Max resistance approximately 187 N (42 lb).	Max a x b = 38 x 25 mm (0.9 in) D: 38 – 45 mm (1.4 - 1.7 in) with clip lever. Max fore-aft span shall not exceed 75 mm (2.9 in).	L, Length, minimum: 100 mm (3.9 in)		Minimum clearance shall be 50 mm (1.9 in) in front, 75 mm (2.9 in) either side	Maximum for seated user: 355 mm (13.9 in)

Downloaded from http://www.everyspec.com

5.1.4.3 High-force controls.

5.1.4.3.1 Use. Controls requiring user forces exceeding the strength limits of the lowest segment of the expected user population shall not be used. High-force controls shall not be used except when the user's nominal working position provides proper body support or limb support or both, e.g., seat backrest, foot support. Sustained (i.e., durations longer than 3 seconds) high-force requirements shall be avoided.

5.1.4.3.2 Arm, hand, and thumb-finger controls. Where arm, hand, and thumb-finger controls requiring high control forces are to be used, the maximum force requirements shall not exceed those specified on figure 23, and corrected, where applicable, for females. Two thirds of each value shown is considered to be a reasonable adjustment.

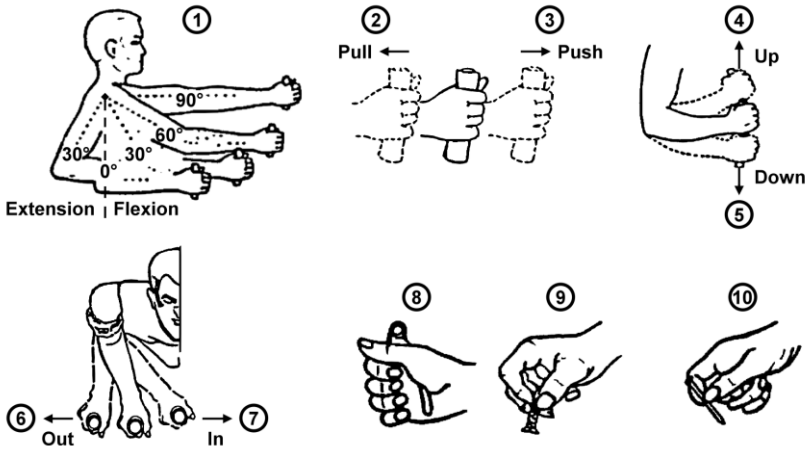

Arm Strength in Newtons (pounds of force)												
(1)	(2)		(3)		(4)		(5)		(6)		(7)	
Degree of shoulder flexion/extension	Pull		Push		Up		Down		Out		In	
	L	R	L	R	L	R	L	R	L	R	L	R
90 deg (flexion)	222 (50)	231 (52)	187 (42)	222 (50)	40 (9.0)	62 (14)	58 (13)	76 (17)	36 (8.0)	62 (14)	58 (13)	89 (20)
60 deg (flexion)	187 (42)	249 (56)	133 (30)	187 (42)	67 (15)	80 (18)	80 (18)	89 (20)	36 (8.0)	67 (15)	67 (15)	89 (20)
30 deg (flexion)	151 (34)	187 (42)	116 (26)	160 (36)	76 (17)	107 (24)	93 (21)	116 (26)	45 (10)	67 (15)	89 (20)	98 (22)
0 deg (neutral)	142 (32)	165 (37)	98 (22)	160 (36)	76 (17)	89 (20)	93 (21)	116 (26)	45 (10)	71 (16)	71 (16)	80 (18)
30 deg (extension)	116 (26)	107 (24)	98 (22)	151 (34)	67 (15)	89 (20)	80 (18)	89 (20)	53 (12)	76 (17)	76 (17)	89 (20)

Hand and pinch strength Newtons (pounds of force)				
	(8)		(9)	(10)
	Hand grip		Palmer pinch grip	Tip pinch grip
	L	R	(Thumb pad to index & middle finger pads)	(Thumb tip to index finger)
Momentary hold	250 (56)	260 (59)	60 (13)	60 (13)
Sustained hold	145 (33)	155 (35)	35 (8.0)	35 (8.0)

FIGURE 23. Arm, hand, and thumb-finger strength (5th percentile male data).

Downloaded from http://www.everyspec.com

5.1.4.3.3 Foot controls. Where foot controls require high control forces, the push force exerted by the leg depends on the thigh angle and the knee angle. Figure 22 specifies the mean maximum push at various knee and thigh angles. The maximum push is at about the l60 degree angle, referred to as the limiting angle. The values of figure 22 apply to males only and shall be corrected, where applicable, for females. Two-thirds of each value is considered to be a reasonable adjustment.

5.1.4.4 J-Handles. Dimensions, resistance, displacement, and clearance of high-torque J-handles shall conform to the criteria on figure 24. When using small scale, low-torque [<0.7 N•m (6.0 in-lb)] J-handles, the handle portion shall have a flattened or flared tip for finger placement, and the clearance between handle and panel surface can be less than that shown on figure 24.

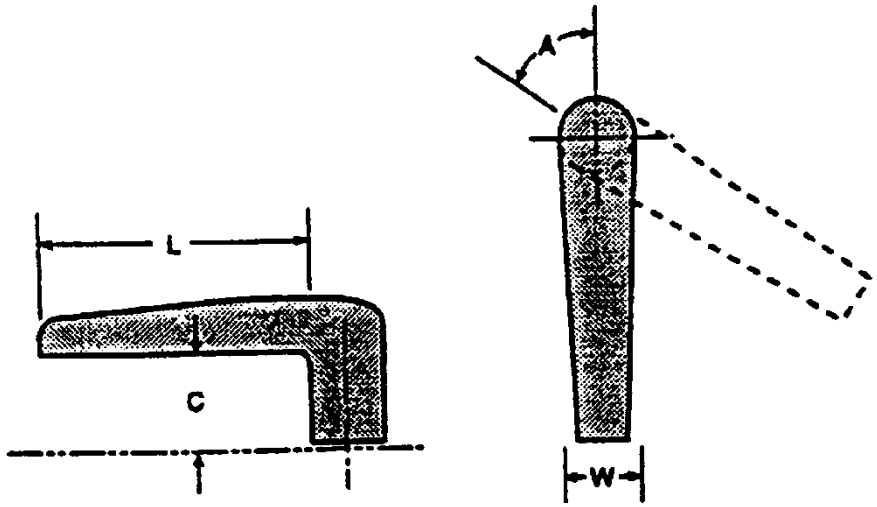

	L, Length	C, Clearance	W, Width	A, Displacement	Resistance
Minimum	95 mm (3.75 in)	32 mm (1.25 in)	16 mm (0.65 in)	±24 deg	0.7 N x m (6.0 in-lb)
Maximum	150 mm (6.0 in)	50 mm (2.0 in)	25 mm (1.0 in)	±60 deg	0.14 N x m (12 in-lb)

FIGURE 24. High-torque J-handles.

5.1.5 Miniature controls.

5.1.5.1 Use. Miniature controls may be used only when severe space limitations exist. Miniature controls shall not be used when available space is adequate for standard-sized controls or when heavy gloves or mittens will be worn.

5.1.5.2 Dimensions, resistance, displacement, and separation.

a. Dimensions and separation. When design constraints dictate the use of miniature controls, the dimensions and separation of the controls shall be the maximum permitted by the available space up to the maxima prescribed herein for standard-sized controls.

b. Resistance and displacement. Resistance and displacement of miniature controls shall conform to the criteria specified in 5.1 for the standard size of that type of control.

5.1.5.3 Other requirements. Other design considerations (e.g., labeling, orientation) shall conform to the requirements specified in 5.1 for the standard size of the control.

5.1.6 Eye- and head-based controls.

Downloaded from http://www.everyspec.com

5.1.6.1 Use. Eye- and head-based controls may be used for a variety of tasks including teleoperations, instrument selection on a panel, and visual search tasks.

5.1.6.2 Vibration. Eye- and head-based controls shall not be used in vibrating environments.

5.1.6.3 Precision. Head-based controls shall not be used if the task requires frequent, precise head movements.

5.1.6.4 Dwell times. Line-of-sight dwell times shall be minimized when using eye-based controls. Line-of-sight dwell times shall be not greater than 300 milliseconds.

5.1.6.5 Response time. System response time shall be minimized. System response time shall be not greater than 100 milliseconds.

5.2 Visual displays. This section is divided into three parts: Installation of Visual Displays (see 5.2.1), Displays – Content (see 5.2.2), and Displays – Hardware (installation and content guidance specific to different display hardware technologies; see 5.2.3).

5.2.1 Installation of visual displays.

5.2.1.1 General.

5.2.1.1.1 Use of visual displays. Visual displays shall be used to provide the user with a clear indication of equipment, system, or environmental conditions for operation under any eventuality commensurate with the operational and maintenance philosophy of the system under design.

5.2.1.1.2 Display face flush with panel. The face of a display shall be flush with the surface of the panel in which it is installed.

5.2.1.1.3 Geometric distortion. The combined effects of all geometric distortion shall not displace any point on the display from its correct position by more than 5.0 percent of the picture height.

5.2.1.1.4 Preventing flicker of electronic visual displays. Display refresh rate and other parameters (e.g., duty cycle, brightness, contrast, color, and motion) shall be adjusted to provide a flicker free display.

5.2.1.1.5 Geometric stability (jitter) of visual displays. Over a period of 1.0 second, the movement of a picture element shall not be greater than 0.2 milliradians (41 seconds) of visual angle.

5.2.1.1.6 Vibration of display. Vibration of visual displays or of observers shall not degrade user performance below the level required for mission accomplishment (see 5.5.5). In a mobile environment, vibration of visual displays or of observers shall not degrade user performance below the level required for mission accomplishment (see 5.5.5).

5.2.1.2 Display location and arrangement.

5.2.1.2.1 Display location. Displays shall be located and designed so that they may be read to the required degree of accuracy by personnel in ergonomic operating or servicing positions.

5.2.1.2.2 Access to display. Visual displays shall be visually accessible without resorting to use of ladders, flashlights, or other special equipment in order to read the display.

5.2.1.2.3 Orientation of display. Display faces shall be perpendicular to the user's normal line of sight. Display faces shall be not less than 45 degrees (0.79 radians) from the normal line of sight (see figure 2).

5.2.1.2.4 Orientation to reduce parallax. The orientation of the display shall be such that parallax is minimized.

5.2.1.3 Luminance considerations for visual displays.

5.2.1.3.1 Luminance range of a display. The display luminance adjustability (highest to lowest) range shall be not less than 50:1.

Downloaded from http://www.everyspec.com

5.2.1.3.2 Adjustable luminance of self-luminous displays. Self-luminous displays shall have either individually adjustable luminance or be visibly uniform over the range of luminance settings normally used.

5.2.1.3.3 Detection of faint signals on a visual display. When the detection of faint signals is required and when the ambient illuminance may be above 2.7 lux, displays shall be hooded, shielded, or recessed. A suitable filter system may be employed.

5.2.1.3.4 Luminance dimming. A control shall be provided to vary the electronic display luminance from 10 percent of minimum ambient luminance to full luminance.

5.2.1.3.5 Luminance range. The brighter of characters or their background shall have a luminance of not less than 35 cd/m². Where military applications or survivability require, the luminance shall be adjustable to zero.

5.2.1.3.6 Brightness ratio. The contrast ratios between the lightest and darkest areas or between a task area and its surroundings shall be no less than the ratios specified in table XII.

TABLE XII. Contrast ratios.

Comparisons	**Environmental Classification**		
	A 1/	**B** 2/	**C** 3/
Between lighter surfaces and darker surfaces within the task	5:1	5:1	5:1
Between tasks and adjacent surroundings	3:1	3:1	5:1
Between tasks and more remote surfaces	10:1	20:1	4/
Between luminaries and adjacent surfaces	20:1	4/	4/
Between the immediate work area and the rest of the environment	40:1	4/	4/

NOTES:

1/ A = Interior areas where reflection off entire space can be controlled for optimum visual conditions.

2/ B = Areas where reflection off immediate work area can be controlled, but there is only limited control over remote surroundings.

3/ C = Areas (indoor and outdoor) where it is impractical to control reflection and difficult to alter environmental conditions.

4/ Contrast ratio control not practical.

5.2.1.3.7 Automatic brightness adjustment. Automatic adjustment of brightness on the basis of ambient illuminance may be used if the brightness is adequate for the full range of ambient illuminance.

5.2.1.3.8 Maximum and minimum luminance ratio. For surfaces that vary in brightness, the maximum-to-minimum luminance ratio on the surface shall not exceed 10:1.

5.2.1.3.9 Reflection of the display. All reflections of the display that may disrupt operations, such as reflections onto windshields, shall be prevented. Suitable techniques, such as one or more of the following, shall be used to prevent reflection:

a. Construction of the display.
b. Arrangement of the display.
c. Mounting of the display.
d. Use of shields.
e. Use of filters.
f. Use of films that reduce reflection by >0.7.

Downloaded from http://www.everyspec.com

5.2.1.3.10 Glare of visual displays. Glare shall be prevented by use of one or more of the following techniques:

a. Construction of the display.

b. Arrangement of the display.

c. Mounting of the display.

5.2.1.3.11 Reflected glare of visual displays. Reflected glare shall be prevented by use of one or more of the following techniques.

a. Proper placement of the display screen relative to the light source.

b. Use of a hood or shield.

c. Providing adjustable height, viewing angle, or contrast.

d. Using a first surface treatment to minimize specular reflections.

e. Providing a filter control over the light source.

5.2.1.3.12 Polarized/tinted surfaces for visual displays. Neither polarized nor tinted display surfaces shall be used to reduce glare or reflection.

5.2.1.3.13 Display adjacent surfaces. Surfaces adjacent to the display screen shall have a matte finish.

5.2.1.3.14 Luminance range of adjacent surfaces to electronic displays. The luminance range of surfaces immediately adjacent to display screens shall be between 10 percent and 100 percent of screen background luminance.

5.2.1.3.15 Luminance levels of adjacent light sources. With the exception of emergency indicators, no light source in the immediate surrounding area shall be of a greater luminance than the display.

5.2.1.3.16 Luminance of displays from ambient illuminance. Ambient illuminance shall not contribute more than 25 percent of screen brightness through reflection.

5.2.1.4 Display illumination and light distribution. The full range of operational conditions shall be taken into account in designing display illumination.

5.2.1.4.1 Uncontrolled light conditions. A display that is designed to be operable under conditions varying from night blackout conditions to full daylight shall incorporate the necessary illumination features to allow proper use under all of these widely varying conditions.

5.2.1.4.2 Controlled lighting environment. A display which will always be used in a controlled lighting environment, such as a command and control center, may need to satisfy illumination criteria only for the ambient conditions of that task environment.

5.2.1.4.3 Daylight readability. Where daylight readability is an issue, displays shall be in accordance with MIL-L-85762.

5.2.1.4.4 Ambient illuminance. The ambient illuminance in the display area shall be appropriate for other visual functions (e.g., setting controls, reading instruments). The ambient illuminance shall not degrade the visibility of signals on the display.

5.2.1.4.5 Variable ambient illuminance. When a display is used in variable ambient illuminance, controls shall be provided to dim all light sources, including illuminated panels, indicators, and switches in the immediate surrounding areas.

5.2.1.4.6 Image polarity. If the ambient illumination in the vicinity of the display is 540 lux or greater, dark characters and symbols on a light background shall be used rather than light characters on a dark background.

5.2.1.4.7 Illumination for a group of displays. External illumination of a group of displays shall not vary more than 3:1 between the brightest and the darkest area.

Downloaded from http://www.everyspec.com

5.2.1.4.8 Protective gear and illumination of visual displays. Where users may be required to use visual displays while wearing chemical, biological, radiological, nuclear, and high-yield explosive (CBRNE) gear, displays shall be designed for viewing under relatively high levels of illumination.

5.2.1.5 Contrast of displays. Sufficient contrast shall be provided between all displayed information and the display background to ensure that the required information can be perceived by the user under all expected lighting conditions.

5.2.1.5.1 General contrast of electronic displays. Contrast between characters and a background shall be 6:1 or greater. The preferred contrast shall be 10:1 or greater.

5.2.1.5.2 Contrast control. A control shall be provided to vary the contrast between the characters and the background.

5.2.1.6 Displays for night operations.

5.2.1.6.1 Night vision device compatibility. Where night vision device compatibility is required, displays shall be in accordance with MIL-STD-3009.

5.2.1.6.2 Display blackout discipline. Where operational security or survivability requires blackout discipline, the use of permanently illuminated outdoor displays shall be avoided and illumination of displays within personnel enclosures shall automatically switch off when doors to the enclosure are opened.

5.2.1.6.3 Display height. When dark adaptation is required, the top of the highest display shall be lower than the window.

5.2.1.6.4 Field use panel dimming for displays. When visual displays are to be viewed out of doors at night, maximum display illumination shall be provided in accordance with the FULL ON position listed in table XIII. When visual displays are to be viewed out of doors at night, no panel lighting current shall flow when the dimming control is in the FULL OFF position listed in table XIII. When visual displays are to be viewed out of doors at night, panel light levels shall be continuously variable from 0.1 cd/m² near OFF to 3.5 cd/m² at 50 percent position of control.

TABLE XIII. Control positions for full off and full on illumination.

Type	OFF Position	ON Position
Rotary knob/selector	Full counter-clockwise	Full clockwise
Horizontal slider/thumbwheel/lever	Full left	Full right
Vertical slider/thumbwheel/lever	Full down	Full up

5.2.1.6.5 Display hood. When dark adaptation is required, or high ambient light conditions are specified, all displays shall have an upper ⅓ hood with rounded corners.

5.2.1.6.6 Display face away from windows. When dark adaptation is required, all displays shall face away from windows.

5.2.1.6.7 Ambient light levels for dark adaptation for displays. At night, with all overhead lighting off, the preferred forward field of view (FFOV) ambient level shall be 0.001 lux, but it is preferred that the ambient level shall be 0.0001 lux to maintain dark adaptation.

5.2.1.6.8 Low-level blue-filtered lighting for visual displays. Low-level blue-filtered white color light shall be used for panel, display, task, and backlit keyboard lighting in accordance with SAE-AS25050. (Also see 5.5.3)

5.2.2 Displays – content.

Downloaded from http://www.everyspec.com

5.2.2.1 General. Computer programs and equipment interfaces shall provide a functional interface between the system for which they are designed and users (operators/maintainers) of that system. This interface shall optimize compatibility with personnel and shall minimize conditions which can degrade human performance or contribute to human error.

5.2.2.1.1 Current modes. When multiple modes of operation exist, a clear indication of the current operating mode shall be provided to the user at all times.

5.2.2.1.2 Overlays. Mechanical overlays, such as transparent sheets placed on the display, shall be avoided.

5.2.2.1.3 Chromatic misregistration. Color fringes on images and symbols on displays shall be prevented and shall not have an adverse effect on an user's perceptions or performance.

5.2.2.1.4 Data entry and display consistency. Data display word choice, format, and style shall be consistent with the requirements for data entry and control (see 5.1.3.4).

5.2.2.1.5 CBRNE contamination. Displays or indicators that show the presence of CBRNE agents shall also show when such agent contaminations decrease to safe levels.

5.2.2.1.6 Maintenance displays. Indicator lights used solely for maintenance and adjustment shall be covered or non-visible during normal operation, but shall be readily accessible when required.

5.2.2.2 Information architecture.

5.2.2.2.1 Amount of information. The amount of information required shall be in accordance with the following:

a. Limited to necessary and sufficient. Information displayed to an user shall be sufficient to allow the user to perform the intended mission and shall be limited to information necessary to perform specific actions or to make decisions. The information requirements shall be traceable to a task analysis.

b. Precision. Information shall be displayed only within the limits and precision required for specific user actions or decisions. The information requirements shall be traceable to a task analysis.

c. Unrelated markings. Trademarks and company names, or other similar markings not related to the information displayed shall not be displayed on the panel face.

d. Redundancy. Redundant information shall not be displayed to a single user unless it is required to achieve specified reliability.

e. Context for displayed data. The user shall not have to rely on memory to interpret new data. Each data display shall provide needed context, including recapitulating prior data from prior displays as necessary.

f. Combining operator/maintainer information. Operator and maintainer information shall not be combined in a single display unless the information content, format, and timeliness support the needs of both users, as defined by the results of the task analysis.

5.2.2.2.2 Information density. At least one character line shall be left blank above and below critical information. At least two character spaces shall be left blank to the left and right of critical information.

5.2.2.2.3 Presentation of information. Information shall be presented in accordance with the following:

a. Plain text. Information shall be displayed in language appropriate to the user's level of training and be as specific as possible to the user's particular application.

b. Abbreviations and acronyms. Abbreviations and acronyms shall be in accordance with current standards (e.g., MIL-STD-2525; MIL-STD-1787) and using the guidance of JSSG-2010. New acronyms, if required, shall be developed using logical rules of abbreviation. Abbreviations shall be distinctive to avoid confusion. Words shall have only one consistent abbreviation. No punctuation shall be used in abbreviations. Definitions of all abbreviations, mnemonics, and codes shall be provided at the user's request.

c. Quantitative information. Quantitative information shall be in accordance with the following:

(1) Numeric digital displays. Numeric digital displays shall be used when precision of displayed information is important.

Downloaded from http://www.everyspec.com

(2) Pattern perception. Representational or graphic displays shall be used when the pattern of variation is important (see 5.2.2.5). Numeric digital displays shall not be used as the only display of information when the pattern of variation is important for accurate perception.

(3) Numeric digital display rate. Numeric digital displays shall not be used as the only display of information when rapid or slow digital display rates inhibit accurate perception. Representational or graphic displays shall be used when the pattern of variation is important (see 5.2.2.5).

(4) Units. Displays of quantitative information shall include units of measure.

5.2.2.2.4 Format.

a. Critical data. Critical data shall not be obscured by pagination or scrolling.

b. Readily usable form. Information shall be presented to the user in a directly usable form that does not require the user to transpose, compute, interpolate, or mentally translate the information into other units, number bases, or languages.

c. Standardization. The content of displays within a system shall be presented in a consistent, standardized manner.

d. Consistency. Display formats shall be consistent within a system and across systems that are used by the same users.

e. Consistency within tasks. The same format shall be used for input and output within a task.

f. Recurring data fields. Recurring data fields within a system and across systems used by the same users shall have consistent names.

g. Comparative data fields. Data fields to be compared on a character-by-character basis shall be positioned one above the other with alignment of characters to be compared.

h. Position of recurring data fields. Recurring data fields within a system and across systems used by the same users shall occupy consistent relative positions across displays.

i. Consistency of data entry formats. Data entry formats shall match the source document formats.

j. Formats under computer control. Data, text, and formats shall be under computer, not user, control.

k. Command entry, prompts, messages at bottom. The last few lines at the bottom of every display shall be reserved for status and error messages, prompts, and command entry.

l. Critical messages in dialog boxes. Messages that are critical or that require user acknowledgment (e.g., error messages) shall appear in their own dialog boxes.

m. Page numbering. Each page of a multiple page display shall be labeled to identify the currently displayed page and the total number of pages (e.g., “Page 2 of 5”).

n. Display titles and headers. Each display shall be labeled with a title or header. Titles and headers shall be in accordance with the following:

(1) The title or header shall be unique within the system.

(2) The title or header shall be positioned at the top left corner of the page.

(3) The title or header shall briefly describe the contents or purpose of the page.

(4) The title or header shall be meaningful enough to be learned and remembered easily.

(5) At least one blank line shall separate the title or header and the body of the page.

o. Use of frames. Frames shall only be used when the user will benefit from the presentation of two or more groups of information simultaneously and one of the groups requires scrolling to see all of the content.

(1) Every display frame shall have a unique identification to provide a reference for use in requesting the display of that frame.

(2) Frame identification shall be prominently displayed in the top left corner of the frame.

(3) Frame identification shall not exceed the size of the frame when resized to its minimum size.

(4) Frame identification shall be meaningful enough to be learned and remembered easily.

Downloaded from http://www.everyspec.com

(5) Frame identification shall describe the content within that frame.

(6) At least one blank line shall separate the frame identification and the body of the frame.

5.2.2.2.5 Grouping – multiple displays. Grouping of multiple displays shall meet the following:

a. Grouping. All displays necessary to support an user activity or sequence of activities, shall be grouped together.

b. Frequency of use. Displays used most frequently shall be grouped together and placed in the optimum visual zone (see figure 25).

c. Importance. Important or critical displays shall be located in the optimum projected visual zone or otherwise highlighted.

d. Function and sequence. Displays shall be arranged in relation to one another according to their sequence of use or the functional relations of the components they represent such that order in functional groups provide a viewing flow from left-to-right or top-to-bottom. This requirement does not apply to master warning, caution, or advisory indicators (see 5.2.3.13.9)

e. Consistency. The arrangement of displays within a system shall be consistent in principle from application to application.

f. Use with individual protective equipment. Where users may be required to use visual displays while wearing CBRNE gear, displays shall be designed for foveal vision under relatively high levels of illumination and displays in the peripheral field of view shall only be used to attract attention.

Downloaded from http://www.everyspec.com

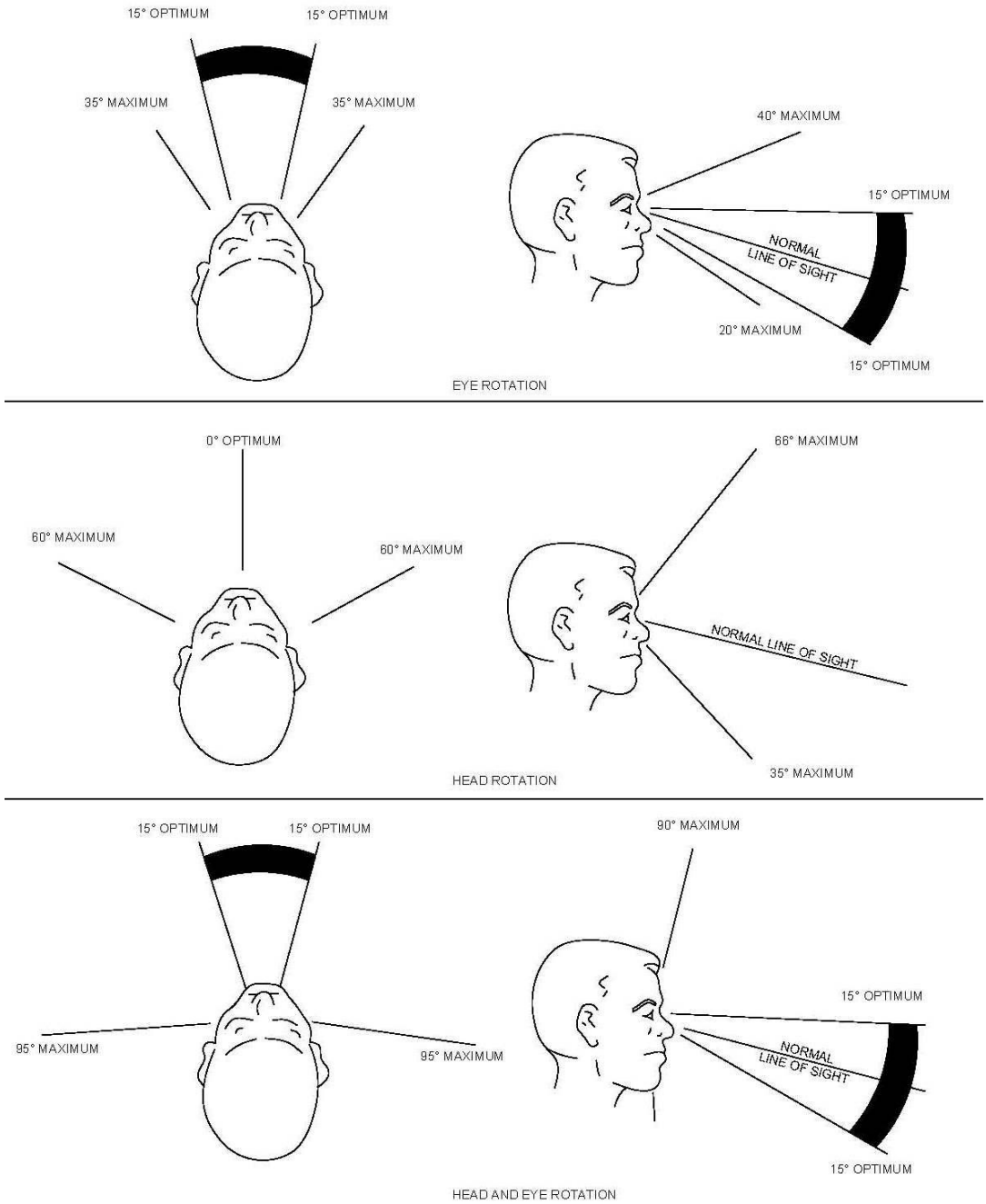

FIGURE 25. Vertical and horizontal visual fields.

5.2.2.2.6 Grouping within a display. Grouping within a display shall be in accordance with the following:

a. Information grouping. Information or data on a display shall be grouped according to the following guidelines listed in order of preference.

(1) Order and sequences. When data fields have a naturally occurring order, such as chronological or sequential, such order shall be reflected in the format organization of the fields.

(2) Data grouped by importance. Displayed data items that are critical or require immediate user response shall be grouped at the top of the display.

Downloaded from http://www.everyspec.com

(3) Data grouped by function. Sets of data that are associated with specific questions or related to particular functions shall be grouped together to signify those functional relationships.

(4) Data grouped by frequency. Data items used more frequently than others shall be grouped at the top of the display.

b. Data separation. Separation of groups of information shall be accomplished by blanks, spacing lines, or color-coding.

5.2.2.3 Coding.

5.2.2.3.1 General. General coding design shall meet the following:

a. Use of coding. Coding shall be used to facilitate discriminating between individual displays (e.g., different modes of operation), identifying functionally related displays, recognizing the relationship between displays, identifying critical information within a display to preserve conventional practices and arrangements for alarming and alerting systems, critical information, unusual values, changed items, items to be changed, high priority messages, special areas of the display, errors in entry, criticality of command entry, and targets.

b. Consistent coding. Consistent meaningful codes shall be used.

c. Positive impact on performance. Coding shall not be used if it reduces legibility or transmission time.

d. Standardization. All coding within the system shall be uniform and shall be established by agreement with the procuring activity.

e. Aircrew display symbology. Aircrew display symbology shall be coded using the guidance of JSSG-2010.

f. Techniques. When coding is used on a display the following techniques may be used: color, brightness, flash, size, pattern, location, underlining, symbol, or shape.

5.2.2.3.2 Color-coding. Color-coding shall be in accordance with the following:

a. Use. Color-coding may be employed to differentiate between classes of information in complex, dense, or critical displays.

b. Foveal view only. Color shall not be used for gaining attention outside the optimum visual field (see figure 25).

c. Consistency. Color-coding shall be used consistently within a display and across displays of other systems used by the same users.

d. Preventing color mismatch. To avoid mismatch of color and color association that can slow recognition time and increase errors, each color shall represent only one category of displayed data.

e. Color customization. Color customization shall be allowed only for information that is not tactically significant.

f. Color recognition. When the user must recognize categories of information (e.g., represent different variables on a graph, different types of information on a map) no more than seven colors shall be used to represent and distinguish between categorically different information.

g. Color selection for color recognition. To maximize discriminability, colors having the dominant wavelengths listed in table XIV shall be used for color recognition.

h. Color differentiation. When using color to group elements of a display together (i.e., to show parts are related or different) and the color has no meaning beyond a grouping function, up to 30 colors may be used.

i. Saturation coding. Hue saturation shall be used to indicate relative intensity (e.g., best, hottest, wettest, safest, deepest). Saturation coding is best done in grayscale, except when showcasing the following:

(1) Hotter to cooler where saturation changes from red to blue.

(2) More dangerous to less dangerous where intensity of red is used for dangerous areas while the background is in grayscale.

Downloaded from http://www.everyspec.com

j. Color meanings. Colors shall be associated with the common color meanings presented in table XV.

(1) Cool colors. Cool colors (those with shorter wavelengths such as blue or green) shall be used to display information used infrequently and to convey status of background information.

(2) Warm colors. Warm colors (those with longer wavelengths, such as red or orange) shall be used to convey action or the requirement for a response.

k. Dark adaptation. When color-coding is used, luminance shall be more than 10 cd/m².

l. Color-blind users. If the user population includes color-blind users, color-coding shall not be the only means of coding information. If the user population includes protanopes, wavelengths above 650 nanometers shall not be used. If the user population includes deuteranopes, the following color values shall be used to ensure discrimination of red and green.

Color	CIE Value (x, y, Y)
Red	0.6078, 0.3441, 31.05
Green	0.2564, 0.4372, 39.56
Yellow	0.4209, 0.5040, 111.4
Blue	0.1566, 0.0808, 13.33

m. Induced color-blind users. Operational requirements occasionally result in the need to introduce protective eyewear, visors, or other filters in the optical path that are designed to absorb or reflect measureable and uniquely specifiable wavelengths of directed energy within the visible spectrum. The results are selective induced color deficiencies or color-blindness. Color-coding in display design shall not be the only means of coding information for affected operational systems.

n. Color contrast. Colored symbols shall differ from their background by not less than 100 D E (CIE L*u*v) distances when calculated using the formula below:

The elements required for the calculation are the luminance (Y), the UCS coordinates (u', v') for foreground and background colors, and the maximum luminance for the display (Y_M).

As with the (CIE L*u*v*) distances, caution should be used in assessing legibility for characters in colors having small luminance differences. This caution applies not only to characters in color but also to small luminance differences in background colors and for very small luminance differences between characters in color and background in color. Unusually large or small characters may lead to erroneous estimates of legibility.

The metric is as follows:

$$\Delta E\ (Yu'v') = [(155 * \Delta Y/Y_M)^2 + (367 * \Delta u')^2 + (167 * \Delta v')^2]^{(1/2)}$$

where

ΔY = difference in absolute luminance between foreground (e.g., text) and background.

Y_M = the maximum luminance of any color on the display (i.e., pure white), measured in the same units as ΔY.

$\Delta u'$ = difference between foreground and background values of the u' coordinate in accordance with ECA/EIA TEB 26.

$\Delta v'$ = difference between foreground and background values of the v' coordinate in accordance with ECA/EIA TEB 26.

Values of the u' and v' coordinates range from 0 to 1. The range of luminance variables (ΔY and YM) is not limited.

The values 155, 367, and 167 are empirically derived weights.

Downloaded from http://www.everyspec.com

o. Color differences. Colors in a set shall differ from one another by not less than 20 D E (CIE L*u*v) distances when calculated using the formula below.

For color displays, the reference white can be taken as the white on the display obtained with full-intensity red, at 6500 K° or 9300 K. The difference formula is:

ΔE units (CIE L*u*v*) = $[(L^*_1 - L^*_2)^2 + (u^*_1 - u^*_2)^2 + (v^*_1 - v^*_2)^2]^{(1/2)}$

where subscripts denote the values calculated for each of two colors,

$L^* = 116 * (Y/Y_0)^{(1/3)} - 16$; (assuming that $1.0 > Y/Y_0 > 0.01$)

L* is the color's value, a measure of the color's luminance relative to reference white. It ranges from 0 to 100.

Y is overall luminance in cd/m^2. It is one of the three tristimulus values (X, Y, Z) measured as the integral of a weighted spectral power distribution curve. The CIE provides three weighting curves in their specification for calculating each of the tristimulus values from a given spectral power distribution curve.

Y_0 is the luminance of the reference white.

$u^* = 13 * (L^*) * (u' - u'_0)$

$v^* = 13 * (L^*) * (v' - v'_0)$

$u' = (4X) / (X + 15Y + 3Z)$

$v' = (9Y) / (X + 15Y + 3Z)$

u* and v* are versions of the UCS coordinates (u', v') scaled and adjusted to the reference white, and used for calculating color difference.

u' and v' are the UCS coordinates for the color in question, based on the tristimulus values. Note that the tristimulus values can be normalized for use in the u' and v' equations, but Y cannot be normalized for the L* equation.

u'_0 and v'_0 are the UCS coordinates for the reference white derived from the ECA/EIA TEB 26.

For reference white at D6500 K (the "D" describes a spectral power distribution curve for the reference white. Other curves are available with corresponding chromaticity values.): $u'_0 = 0.198$ and $v'_0 = 0.468$

For reference white at 9300 K + 27 MPCD (MPCD = Minimum Perceptible Color Difference): $u'_0 = 0.181$ and $v'_0 = 0.454$

Note that the 9300 K + 27 MPCD values are based on a white point located at the intersection of the ISO temperature line for 9300 K with the daylight locus. Y_0 in this use of the ΔE (CIE L*u*v*) distance metric is defined differently than suggested by CIE.

p. Object size. When accurate color perception is required, the major dimension of isolated large symbols shall subtend not less than 8.7 milliradians (30 minutes) of visual angle, preferably 13.1 milliradians (45 minutes).

q. Object height. When accurate color perception is required, the height of small symbols and characters shall subtend at least 5.8 milliradians (20 minutes) of visual angle, as measured from the longest anticipated viewing distance.

r. Fill symbols. To enhance detectability and discriminability, color-filled symbols shall be used instead of outlined symbols.

Downloaded from http://www.everyspec.com

TABLE XIV. Wavelength values for color discrimination.

Color name	Nanometers (nm)	CIE value (x, y, Y)
Red	700	0.6078, 0.3441, 31.05
Orange	600	
Yellow	570	0.4209, 0.5040, 111.4
Yellow-green	535	
Green	500	
Blue-green	493	
Blue	470	0.1566, 0.0808, 13.33

TABLE XV. Common color association meanings.

Color	Maps and tactical meaning	Classification meaning	Alarm, alert, threat meaning	Equipment meaning	Other common meaning
Red	Red alert Forces or situation at critical condition Hostile target identification	Secret	Critical consequences Danger or unsafe Severe threat Emergency Alarm	Closed/stopped Oxygen Malfunction Ordnance handling	Stop Heat or fire Failure OFF (as opposed to ON)
Orange		Top Secret	Alarm, alert, or hazard High threat		Value between red and yellow
Yellow	Forces or situation at marginal condition Unknown target affiliation CBRNE areas		Warning, caution, or hazard Elevated threat Approaching critical Extreme Caution Impending danger	Oil	Abnormal state Delay Check/recheck
Green	Non-alert Neutral target affiliation Obstacles Forces or situation at acceptable condition	Unclassified	Normal Safe Low threat	Open/flowing	Maintenance personnel ON (as opposed to OFF) Intolerance/ acceptable Ready, proceed, satisfactory

Downloaded from http://www.everyspec.com

TABLE XV. Common color association meanings – Continued.

Color	Maps and tactical meaning	Classification meaning	Alarm, alert, warning, threat meaning	Equipment meaning	Other common meaning
Blue	Friendly target affiliation Deep water		Safe Guarded threat	Noncritical items Water or flooding Nitrogen	Cool or cold
Cyan (turquoise, light blue)	Friendly target affiliation		Advisory	Aerated water	Cool
Dark blue (navy blue)			Advisory	Untreated water	
Magenta (pink, light purple)			Alarm state Radiation hazard		
Purple (violet)				Aviation fuels	
White			Advisory	Steam	Medical personnel Empty Functional or physical position Action in progress
Black	Political boundary Image or figure edge				Outline or border
Gray				Smoke	Inactive/unavailable options or actions

5.2.2.3.3 Brightness coding. Brightness coding shall be in accordance with the following:

a. Use. Brightness intensity coding shall be employed only to differentiate between an item of information and adjacent information.

b. Brightness intensity levels. No more than two levels of brightness shall be used and each level shall be separated from the nearest other level by not less than a 2:1 ratio.

c. Brightness inversion. When a capability for brightness inversion is available (so-called “reverse video”, where dark characters on a bright background can be changed under computer control to bright on dark, or vice versa), it may be used for highlighting critical items that require user attention. When a capability for brightness inversion is available and when used for alerting purposes, brightness inversion shall be reserved for that purpose, and not be used for general highlighting.

5.2.2.3.4 Flash coding. Flash coding shall be in accordance with the following:

a. Use. Flash coding shall be employed to call the user’s attention to mission critical events only.

b. Duty cycle. The percentage of “on” time shall be equal to but not less than the percentage of “off” time; a 50 percent duty cycle is preferred.

c. Flash rate. No more than two flash rates shall be used. The two flash rates shall differ by not less than 2.0 Hertz. The higher flash rate shall not be greater than 5.0 Hertz. The slower flash rate shall be not less than 0.8 Hertz. The higher flash rate shall reflect more critical information.

d. Flash rate synchronization. Items flashing at the same rate shall be synchronized.

Downloaded from http://www.everyspec.com

e. Text. Characters that must be read shall not flash; an adjacent flashing symbol or flashing background may be used to add emphasis to text.

f. Flash suppression. Event acknowledgment or flash suppression control shall be provided.

g. Flashing area. Only a small area of a display shall flash at any time.

5.2.2.3.5 Size coding. No more than three size levels shall be used. The major dimensions of the larger size shall be not less than 150 percent of the major dimension of the smaller.

5.2.2.3.6 Pattern and location coding. Pattern and location coding may be used to reduce user search time by restricting the area to be searched to prescribed segments.

5.2.2.3.7 Underlining coding. Underlining may be employed to indicate unusual values, errors in entry, changed items, or items to be changed.

5.2.2.3.8 Symbol coding. Symbol coding shall be in accordance with the following:

a. Use. Symbol coding may be used to enhance information assimilation from data displays.

b. Symbol selection. Symbols shall be analogs of the event or system element they represent or be in general use and well known to the expected users.

c. Special symbols. When special symbols are used to signal critical conditions, they shall be used for only that purpose.

d. Markers close to words marked. When a special symbol is used to mark a word, the symbol shall be separated from the beginning of the word by one space.

5.2.2.3.9 Shape coding. Shape coding may be used for search and identification tasks. When shape coding is used, the codes selected shall be based on established standards or conventional meanings.

5.2.2.4 Text presentation.

5.2.2.4.1 Character/signal characteristics. Character/signal characteristics shall be in accordance with the following:

a. Aircrew station signals. Aircrew station signals shall be designed using the guidance of JSSG-2010.

b. Display symbology. All symbology shall be in accordance with the appropriate standards (e.g., MIL-STD-2525) and guidance of JSSG-2010.

c. Alphanumeric character and symbol sizes. The height of alphanumeric characters and pictorial symbols, when measured from the greatest anticipated viewing distance, shall subtend not less than 4.5 milliradians (15 minutes) of visual angle and shall subtend not less than 2.9 milliradians (10 minutes) of visual angle, respectively.

d. Alphanumeric character and symbol sizes for viewing from ejection seats. Aircraft display characters and symbols that must be read in flight shall subtend not less than 7.0 milliradians (24 minutes) of visual angle.

e. Character stroke width. Assuming that the character height conforms to 5.2.2.4.1.c, stroke width shall be not less than 0.0834 nor greater than 0.1667 the number of pixels used for character height.

f. Character width. Character width shall be approximately 0.9 of the height.

g. Signal size and image quality for complex shapes. The size of a symbol or graphic shall be such that all text or graphics embedded within the symbol (e.g., label within symbol) shall subtend not less than 2.9 milliradians (10 minutes) of visual angle from the greatest anticipated viewing distance.

h. Font characteristics. Font style shall allow discrimination of similar characters (e.g., letter l/number 1, letter Z/number 2). A common, standard font shall be used (e.g., Arial, Times New Roman, Courier, Verdana). Where users must read quickly under adverse conditions (e.g., poor lighting), a sans serif style shall be used (e.g., Arial, Verdana, Helvetica).

i. Protective gear. Display characteristics (e.g., legibility) shall be compatible with viewing while wearing a CBRNE protective mask. Symbols shall subtend not less than 5.8 milliradians (20 minutes) of visual angle.

Downloaded from http://www.everyspec.com

5.2.2.4.2 Alphanumerics.

a. Alphanumeric organization. When five or more alphanumeric characters are presented, they shall be separated into groups per their natural organization and punctuation schemes (e.g., mm/dd/yyyy; (123) 555-6789; 123-45-6789).

b. Combination of letters and digits. When a code consists of both letters and digits, common character types shall be grouped together.

c. Blocking. When five or more alphanumeric characters without natural organization are displayed, characters shall be grouped in blocks of three to five characters.

d. Separation of groups. When five or more alphanumeric characters without natural organization are displayed, groups of characters and digits shall be separated from each other by a minimum of one blank space, hyphen, or slash.

e. Long numeric fields. When five or more numeric characters without natural organization are displayed, long numeric fields shall be punctuated with commas, spaces, or slashes.

f. Leading zeros. Leading zeros shall not be used in numerical data.

5.2.2.4.3 Text/program editing. Text/program editing shall be in accordance with the following:

a. Buffer. When inserting characters, words, or phrases (e.g., editing), items to be inserted shall be collected in a buffer area and displayed in the prescribed insert area of the screen for subsequent insertion by user command.

b. Presentation mode. Display mode rather than line mode shall be used for text editing.

c. Display window. ROLL and SCROLL commands shall refer to the display window, not the text/data; that is, the display window shall appear to the user to be an aperture moving over stationary text.

d. Edit commands. Edit commands, such as MOVE, COPY, and DELETE, for adding, inserting, or deleting text/program segments, shall be provided.

(1) Text edit commands. In text editing, editing commands shall be based on character, word, sentence, paragraph, and higher-order segments.

(2) Program edit commands. In program editing, the special commands shall be based on lines or subprograms.

(3) Program lines. Program lines shall reflect a numbering scheme for ease in editing and error correction.

(4) Syntax checking. Line-by-line syntax checking shall be under user control.

(5) Tab controls. For editing programs or tabular data, cursor tab controls or other provisions for establishing and moving readily from field to field shall be provided.

(6) Keying edit commands. Where editing commands are made by keying onto the display, the editing commands shall be readily distinguishable from the displayed textual material.

e. Highlighted text. Where text has been specified to become the subject of control entries (e.g., for underlining, bolding, moving, copying, or deleting), the affected segment of text shall be highlighted to indicate its boundaries.

f. String search. The capability to allow the user to specify a string of text (words, phrases, or numbers) and request the computer to advance (or back up) the cursor automatically to the next occurrence of that string shall be provided.

g. Automatic word wrap. An automatic word wrap (carriage return) shall be provided when the text reaches the right margin for entry/editing of unformatted text.

h. Override of word wrap. User override of automatic word wrap shall be provided.

i. Format control. An easy means shall be provided for users to specify required format control features during text entry/editing, e.g., margins, tab settings, line spacing.

j. Predefined formats. When text formats must follow predefined standards, the required format shall be provided automatically. Where text formats are a user option, a convenient means shall be provided to allow the user to specify and store for future use the formats that have been generated for particular applications.

Downloaded from http://www.everyspec.com

k. Frequently used text. The capability to label and store frequently used text segments (e.g., signature blocks, organizational names, call signs, coordinates), and later to recall (copy into current text) stored segments identified by their assigned labels shall be provided.

l. Head- and foot-of file. The means shall be provided to readily move the cursor to the head (beginning) or the foot (end) of the file.

5.2.2.4.4 Labels. To make the display as meaningful as possible and to reduce user memory requirements, every field or column heading shall be labeled. Labels shall be unambiguously related to the group, field, or message they describe. Labels shall be highlighted or otherwise accentuated to facilitate user scanning and recognition. Labels shall be unique and meaningful to distinguish them from data, error messages, or other alphanumerics. Labels shorter than three words shall be displayed in upper case only. Labels longer than three words shall be displayed in upper and lower case.

5.2.2.4.5 Default values. Default values shall meet the following requirements:

a. To reduce user workload, default values shall be used.

b. Currently defined default values shall be displayed automatically in their appropriate data fields with the initiation of a data entry transaction.

c. The user shall indicate acceptance of the default by a single keystroke.

d. The user shall be able to replace any default value during a given transaction without changing the default definition.

e. The user shall have the option of generating default values based on operational experience, if the systems designer cannot predefine appropriate values.

f. Where a series of default values has been defined for a data entry sequence, the experienced user shall be allowed to default all entries or to default until the next required entry.

5.2.2.4.6 Tabular data. Tabular data shall meet the following:

a. Use. Tabular data displays shall be used to present row-column data to aid detailed comparison of ordered sets of data.

b. Standard formats. Location of recurring data shall be similar among all tabular data displayed and common throughout the system.

c. Arrangement. Tabular data shall be displayed in rows that increase in order from left to right and columns that increase in order from top to bottom.

d. Titles. When tabular data are divided into classifications, the classification titles shall be displayed and subclassification shall be identified.

e. Vertical extension – titles. When tabular data extend over more than one page vertically, the columns shall be titled identically on each page.

f. Horizontal extension. Tabular displays shall not extend over more than one page horizontally.

g. Distinctive and informative labels. Rows and columns shall be labeled distinctively to guide data entry.

h. Layout of numeric entry. Users shall be allowed to make numeric entries in tables without concern for justification. The computer shall right-justify integers, or justify with respect to a decimal point if present.

i. Labeling units of measurement. The units of displayed data shall be consistently included in the displayed column labels.

j. Consistent column spacing. The widths of columns containing the same data elements shall be uniform and consistent within a table and from one table to another.

k. Column scanning cues. A column separation not less than three spaces shall be maintained.

l. Row scanning cues. A blank line shall be inserted after a group of rows at regular intervals not greater than five lines.

Downloaded from http://www.everyspec.com

5.2.2.4.7 Lists. Lists shall meet the following:

a. List arrangement. Items in lists shall be arranged in a recognizable order, such as chronological, alphabetical, sequential, functional, or importance.

b. List lines. Each item in a list shall start on a new line.

c. Vertical extension. Where lists extend over more than one display page, the last line of one page shall be the first line on the succeeding page.

d. Marking multi-line items in a list. Where a single item in a list continues for more than one line, such items shall be marked in some way (e.g., blank line, indentation) so that the continuation of the item is obvious.

e. Vertical ordering in multiple columns. Where items in a list are displayed in multiple columns, items shall be ordered vertically within each column.

f. Arabic numerals. When listed items will be numbered, Arabic numerals shall be used rather than Roman.

g. Hierarchic structure for long lists. Where lists are long and must extend beyond more than one displayed page, a hierarchic structure shall be used to permit the logical partitioning into related shorter lists.

5.2.2.5 Graphic and representational displays.

5.2.2.5.1 Graphical user interfaces. See ANSI/HFES 200 for additional Graphical User Interface guidance.

a. Web page design. See http://www.usability.gov/ for guidance.

b. Pointers and cursors. Where graphic data entry involves frequent pointing on a display surface, the user interface shall provide display control and sequence control by pointing, in order to minimize shifts from one entry device to another. For example, in drawing a flow chart, a user shall be able to link elements or points directly by pointing at them or drawing lines between them rather than by separately keyed entries.

(1) Distinctive cursor. The current cursor position on graphic displays shall be indicated by displaying a distinctive cursor symbol at that point, e.g., a plus-sign, which represents abbreviated crosshairs whose intersection can mark a position with reasonable precision.

(2) Precise positioning. Where data entry requires exact placement of graphic elements, users shall be provided the capability for expansion of the critical display area (e.g., zooming and panning) to make the positioning task easier and more precise.

(3) Confirming cursor position. For most graphics data entry, pointing shall be a dual action, with the first action positioning the cursor at a desired position and the second action confirming that position to the computer. An exception may be a design allowing “free-hand” drawing of continuous lines where the computer must store and display a series of cursor positions as they are entered by the user.

5.2.2.5.2 Graphic data displays. Graphic data displays shall meet the following requirements:

a. Use of graphic data displays. Graphic data displays (e.g., maps, graphs, and computer drawing systems) may be used to present assessment of trend information, spatially structured data, or relatively imprecise information.

(1) Selecting graphic elements. Users shall be provided some means for designating and selecting displayed graphic elements when manipulation of those elements is required. Normally this function is performed by pointing device or cursor.

(2) Selecting from displayed attributes. During graphic data entry, users shall be allowed to specify attributes for displayed elements (e.g., text font, plotting symbol, line type) by selecting from displayed samples illustrating the available options.

(3) Displaying current attributes. During graphic data entry/editing, the selected attributes that will affect current actions shall be displayed for ready reference as a reminder of current selections in effect.

(4) Easy storage and retrieval. The user shall be provided a means for saving and retrieving graphic data displays for their possible reuse which includes the ability to designate filenames of his or her choice for the stored graphic data.

Downloaded from http://www.everyspec.com

(5) Automatic data registration. The computer shall provide automatic registration or alignment of computer-generated graphic data, so that variable data are shown properly with respect to fixed background or data map at any display scale.

(6) Predefined graphic formats. Where graphic data must be plotted in predefined standard formats (e.g., target areas on maps, flight plans), templates or skeletal displays shall be provided for those formats to aid data entry.

(7) Changing size. When editing graphic data, users shall be provided with the capability to change the size (scale) of any selected element on the display, rather than delete and recreate the element in a different size.

(8) Highlighting critical data. When a user's attention must be directed to a portion of a graphic display showing critical or abnormal data, that feature shall be highlighted with some distinctive means of data coding.

(9) Computer derivation of graphic data. When graphic data can be derived from data already available in the computer, machine aids for that purpose shall be provided.

(10) Normal orientation for labels. The text on dynamic graphic displays shall remain upright when the displayed image rotates.

(11) Display of scale. When a map or other graphic display has been expanded from its normal presentation, an indicator of the scale expansion shall be provided.

(12) Interpolation. Computer aids shall be provided to the user if interpolation must be made or where accuracy of reading graphic data is required.

(13) Unobtrusive grids. Any displayed grid lines shall be unobtrusive. Displayed grid lines shall not obscure data elements.

(14) Grid line suppression. Grid lines shall be displayed or suppressed at the option of the user.

b. Graphs and charts. Graphs and charts shall be in accordance with the following:

(1) Graph axes. The axes of graphs shall be labeled.

(2) Trend lines. When trend lines are to be compared, multiple lines shall be used on a single graph.

(3) Reference index. When a user must compare graphic data to some significant level or critical value, a reference index or baseline shall be included in the display.

(4) Data annotation. When precise reading of a graphic display may be required, the capability to supplement the graphic representation with the actual numeric values shall be provided.

(5) Consistent scaling. When users must compare graphic data across a series of charts, the same scale shall be used for each chart.

(6) Single scale only. Where graphs are presented, only a single scale shall be shown in each axis, rather than including different scales for different curves in the graph.

(7) Direct display of differences. Where users must evaluate the difference between two sets of data, that difference shall be plotted directly as a curve in its own right, rather than requiring users to compare visually the curves that represent the original data sets.

(8) Bar graphs. Bar graphs shall be used for comparing a single measure across a set of several entities or for a variable sampled at discrete intervals with adjacent bars spaced not more than one bar width apart. This is to allow direct visual comparison to be made without eye movement

(9) Histograms (step charts). Histograms (bar graphs without spaces between the bars) shall be used where bar graphs are required and where many intervals must be plotted.

c. Drawing systems. Drawing systems shall meet the following requirements:

(1) Drawing lines. When line drawing is required, users shall be provided with aids for drawing straight line segments.

(2) Drawing intersecting lines. When line segments must join or intersect, computer aids shall be provided to aid in such connection.

(3) Drawing figures. When a user must draw figures, computer aids shall be provided for that purpose (e.g., templates, tracing techniques, stored forms).

Downloaded from http://www.everyspec.com

(4) Drawing lines and figures with numeric coordinates. When line or figures must be drawn to represent numeric coordinates, computer aids shall include templates for entering the coordinates and selecting the appropriate units for those coordinates.

d. Geospatial displays. Geospatial displays should incorporate good human engineering practice and state of the art methods until detailed specification data can be developed.

5.2.2.5.3 Representational displays. Representational displays shall meet the following:

a. Use. Representational displays integrate qualitative and quantitative information about relationships between objects in symbolic or pictographic form in order to enhance the user's ability to conceptualize relationships. Representational displays may be used to present information about either the relative position and separation of objects (as in a map), or information not available in the real world, (as in a nautical radar display that shows the predicted path and position of a vessel after a given time), or "real" world (as in a virtual environment).

(1) Display motion. Graphic display items shall not move faster than 60 degrees (1.05 radians) (20 degrees (0.35 radians (preferred)) of visual angle per second.

(2) Orientation of objects. Orientation of real objects relative to the user shall always be clear and appropriate to the task and shall be in accordance with the following:

(a) Displays shall include reference to the vertical or horizontal direction (e.g., "North" or "straight ahead").

(b) Orientation of objects relative to each other shall provide cues concerning the objects depicted (e.g., front and back, top and bottom).

(c) Orientation of objects relative to each other shall provide cues concerning object dynamics (e.g., direction and speed of motion and rotation).

b. Scales. Representational displays shall indicate the scale of the object depicted.

(1) Adjustable scale. The overall scale used shall be user adjustable as appropriate to the task.

(2) Scale indicators. Scale indicators shall be in accordance with the following:

(a) Scale indicators shall be used to display quantitative information combined with qualitative information (e.g., trend, direction-of-motion) and where only quantitative information is to be displayed and there is no requirement (e.g., speed, accuracy of response) that demands the use of numeric digital displays.

(b) Moving pointer, fixed scales shall be used in preference to fixed pointer, moving scales.

(c) Where reading speed is important, circular scales shall be used in preference to horizontal scales or vertical scales, and horizontal scales shall be used in preference to vertical scales.

(d) Except where system requirements dictate nonlinearity to satisfy user information requirements, linear scales shall be used in preference to nonlinear scales.

(e) Numeric values on fixed scales shall increase clockwise, from left to right, or from the bottom up, depending on display design and orientation.

(3) Scale markings – graduations. Scale graduations shall progress by 1, 2, or 5 units or decimal multiples thereof.

(a) Graduation mark size. No more than three sizes of marks (minor, intermediate, and major) shall be used on any scale (see figure 26 and figure 27).

(b) Minor marks. When no intermediate mark is used (i.e., two mark sizes), no more than 4 minor marks shall be used.

(c) Minor marks with intermediate marks. The number of minor marks between numbered scale markers shall not exceed nine, when intermediate marks are used (i.e., three mark sizes).

(d) Intermediate marks. Intermediate marks shall only be used when there are more than four minor marks.

(e) Dimensions. Height, width, and gaps between scale markers shall be in accordance with figure 26.

Downloaded from http://www.everyspec.com

(4) Numerals. Numerals shall be in accordance with the following:

(a) On fixed scales, numerals shall be vertically oriented.

(b) On rotating scales, numerals shall be radially oriented and positioned so as to be upright when read against the pointer.

(c) Except for measurements that are normally expressed in decimals, whole numbers shall be used for major graduation marks.

(d) A display scale shall start at zero, except where the task analysis indicates this would be inappropriate for the function involved.

(5) Scale pointers. Scale pointers shall be in accordance with the following:

(a) The control or display pointer shall extend to, but not overlap, the shortest scale graduation marks.

(b) The pointer tip shall be tapered at a 20 degree angle (40 degree included angle), terminating in a flat tip equal in width to the minor scale graduations.

(c) If a mechanical display, the pointer shall be mounted as close as possible to the face of the dial to minimize parallax.

(d) Pointer color from the tip to the center of the dial shall be the same as the color of the marks.

(e) The tail of the pointer shall be the same color as the dial face, unless the tail is used as an indicator itself or unless the pointer is used for horizontal alignment.

(f) A luminance contrast not less than 3:1 shall be provided between the scale face and the markings and pointer.

(g) Provision shall be made for placing calibration information on instruments without degrading dial legibility.

(6) Coding. Coding shall be in accordance with the following:

(a) Coding on the face of scale indicators may be used to convey such information as desirable operating range, inefficient operation, caution, and danger level.

(b) Operating conditions that always fall within a given range on the scale shall be made readily identifiable by applying pattern- or color-coding to that range.

(c) Red, yellow, and green may be applied, provided they are in accordance with 5.2.2.3.2j and are distinguishable under all expected lighting conditions.

(d) Zone scales shall be shape coded when the indicator must be viewed in blackout conditions or where the illuminant color will cause difficulty in color band discrimination (see figure 28).

c. Circular scales.

(1) Scale reading and pointer movement. When only positive values are displayed, the magnitude of the scale reading shall increase with clockwise movement of the pointer, starting with zero degrees equal to 12 o'clock and positive angles measured in a clockwise direction.

(2) Scale reading and pointer movement with positive and negative values. When positive and negative values are displayed, the magnitude of negative values shall increase with counterclockwise movement and the magnitude of positive values shall increase with clockwise values.

(3) Positive values less than 360 degrees. Where only positive values are displayed and less than 360 degrees are used, the zero or minimum value shall be in the area between 225 and 300 degrees and the maximum value shall be in the area between 60 and 135 degrees, symmetrically arranged.

(4) Positive values across 360 degrees or greater. Where only positive values are displayed over the complete 360 degrees, or when pointer movement exceeds 360 degrees (in conjunction with a second pointer or indicator), the zero or reference point shall be located at the top (0 degrees).

(5) Positive and negative values less than 360 degrees. When positive and negative values are displayed around a zero or a null position, the zero or null point shall be located at either the top or at 270 degrees (12 and 9 o'clock).

Downloaded from http://www.everyspec.com

(6) Scale break. There shall be an obvious break of at least 10 degrees of arc between the two ends of the scale, except on multirevolution instruments such as clocks.

(7) Pointers. Not more than two coaxial pointers shall be mounted on one indicator face. When a common, stable value exists for given operating conditions in a group of indicators, the indicators shall be arranged either in rows so that all pointers line up horizontally on the 9 o'clock position under normal operating conditions or arranged in columns so that all pointers line up vertically in the 12 o'clock position under normal operating conditions. If a matrix of indicators is needed, preference shall be given to the 9 o'clock position.

(8) Relative position of scale marks and numbers. Scale markings and the location of associated numbers shall be arranged to prevent pointers from covering any portion of the scale marks or numerals. Scale marks shall be on or close to the plane of the pointer tip to avoid visual parallax. If readout accuracy is not critical (i.e., gross relationship between the pointer and number is all that is required), an arrangement of numerals inside the scale annulus may be used (see figure 29).

(9) Curved (arc), horizontal straight, and vertical straight scales. See figure 30.

(10) Scale reading and pointer movement. The numeric value of the scale reading shall increase with movement of the pointer up or to the right.

(11) Zero position and direction of movements. When positive and negative values are displayed around a zero point, the magnitude of positive values shall increase with movement of the pointer up or to the right, and the magnitude of negative values shall increase with movement of the pointer down or to the left.

(12) Placement of pointers. Pointers shall be located to the right of vertical scales and at the bottom of horizontal scales.

(13) Placement of numerals. Numerals shall be placed on the side of the graduation marks away from the pointer to avoid having numbers covered by the pointer. If space is limited (for curved or arc scales) numerals may be placed inside of graduation marks to avoid undue constriction of the scale.

(14) Pointer alignment. When a common, stable value exists for given operating conditions in a group of indicators, they shall be arranged either in rows so that all pointers line up horizontally (for vertical scales) or in columns so that all pointers line up vertically (for horizontal scales).

d. Composite scalar/pictorial displays. Combinations of scales, pointers, and pictorialized symbols may be used to combine functionally-related information into a single instrument or display (e.g., artificial horizon, command heading, true/relative bearing). Significant reference features (e.g., aircraft or ship symbols, horizon, attitude, or pitch scales) shall conform to the general criteria herein for direction-of-motion, scale-pointer relationships, and legibility.

Downloaded from http://www.everyspec.com

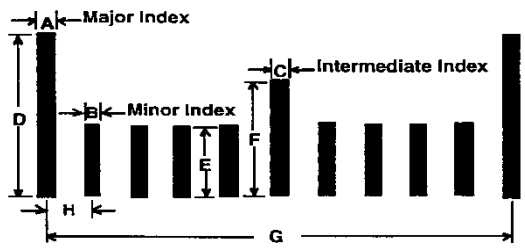

Dimensions of dark markers on light background, visual angle [1/]	
A Width of major scale index	1.16 mrad (4 min) [2/]
B Width of minor scale index	0.87 mrad (3 min) [2/]
C Width of intermediate scale index	1.16 mrad (4 min) [2/]
D Length of major scale index	7.86 mrad (27 min)
E Length of minor scale index	3.49 mrad (12 min)
F Length of intermediate scale index	5.82 mrad (20 min)
G Width of gap between major scale index	25.02 mrad (86 min)
H Width of gap between minor scale index	2.62 mrad (9 min)

NOTES:

1/ For most applications with a dark graduation mark on a light background, the width of the minor graduation mark can be used for major and intermediate graduation marks as well. Use of this strategy allows the width of the pointer tip to be the same as all of the graduation marks. Visual angles are for longest anticipated viewing distance.

2/ 4.36 mrad (15 min) for light markers on dark background.

Fixed scale, moving-pointer preferred; three-level marking, numbered at each major mark. Pointer adjacent to graduation marks to preclude obscuration of either marks or numbers.

For short, finite scale, every 5th graduation is marked; using only two-level marking.

When scale crowding makes pointer-mark association difficult, scale may be graduated in units of two, with two-level scale marking and numbering at each major marking.

When dial face is deeply inset within instrument case and visibility of numbers is more important than scale pointer-mark association, pointer may be located inside the graduations along with numbers at major markings. Pointer width shall be narrowed at point in which it passes numbers.

Moving scale against an index mark or pointer may be used when scale length precludes the fixed-scale format (graduation marks would be too close together). Open window configuration helps user focus on significant scale area.

FIGURE 26. Scale marker dimensions.

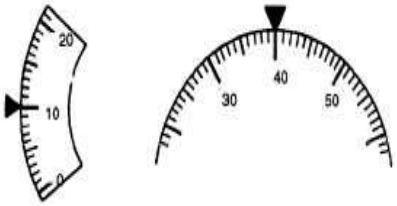

When open window configuration is oriented in vertical position, numbers shall appear upright as each number passes the index mark or pointer. Total scale exposure is desirable when the user needs to refer to other portions of the scale.

FIGURE 27. Scale graduation, pointer position, and scale numbering alternative.

Downloaded from http://www.everyspec.com

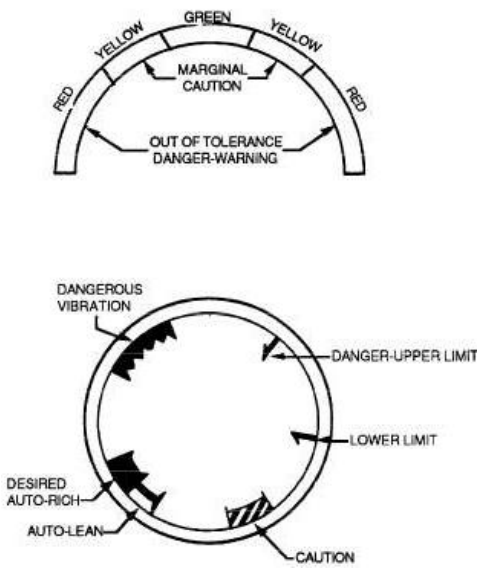

FIGURE 28. Examples of shape- and color-coding.

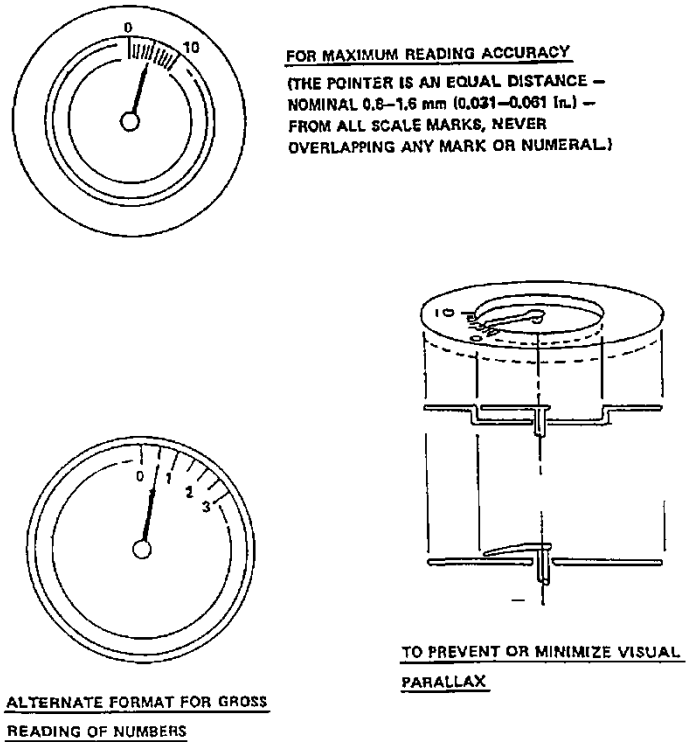

FIGURE 29. Relative position of scale marks, numerals, and pointers on circular dials.

Downloaded from http://www.everyspec.com

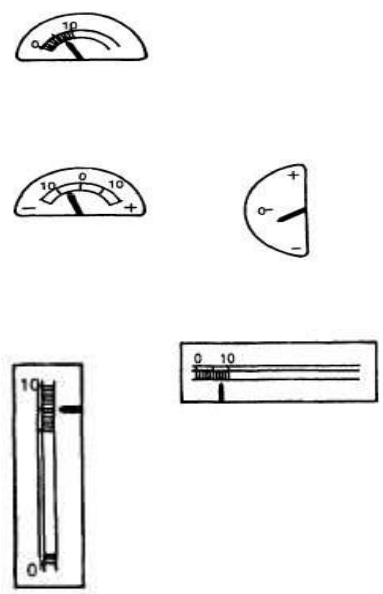

Numerals shall be located outside scale marks, and pointers shall ride against the inner scale annulus just short of the markings. The zero reference shall be to the left so that increasing number and pointer motion is clockwise.

Zero reference (null) for arc scale formats shall be centered on the scale, with positive value increase to the right or upward; negative increase to the left or downward. A "mirror image" of the vertical format is also acceptable.

Relative location of numerals, scale, and pointer on "straight-line" display formats shall be as shown. Pointer shall not cover either the scale marks or the numerals. The pointer shall emanate from the right side of the vertical format and from the bottom of the horizontal format.

FIGURE 30. Relative position of scale marks, numerals, and pointers on arc and straight-line scales.

5.2.2.6 Dynamic displays.

5.2.2.6.1 Changing values. Alphanumeric values that are to change in real time shall be updated according to the following:

a. Values which the user must reliably read according to the task analysis shall not be updated more often than once per second.

b. Changing values which the viewer uses to identify rate of change or to read gross values according to the task analysis shall not be updated faster than 5 times per second, or slower than 2 per second.

5.2.2.6.2 Update rate. Update rate shall be in accordance with the information requirements defined by the task analysis.

5.2.2.6.3 Refresh rates. Displays requiring refreshed information (e.g., head-up displays) shall be refreshed at a rate required by personnel in the normal operating or servicing mode as defined by the task analysis.

5.2.2.6.4 User control of update rate. The rate of update shall be controllable by the user.

5.2.2.6.5 Display freeze. A display freeze mode shall be provided to allow viewing any selected frame that is updated or advanced automatically by the system.

5.2.2.6.6 Resume from freeze. A single action option shall be provided to allow resumption at freeze point or at the current real-time point.

5.2.2.6.7 Display freeze prohibition. The user shall be prohibited from entering display freeze mode when doing so would have an adverse effect on the mission being performed by the system.

5.2.2.6.8 Freeze feedback. An appropriate label shall be provided to remind the user when the display is in the freeze mode.

5.2.2.6.9 Duration. Signals and information shall be displayed the length of time deemed required by the task analysis for reliable detection under expected user workload and operational environment.

5.2.2.6.10 Timeliness. Displays requiring refreshed information (e.g., head-up displays) shall be updated in a synchronous manner.

Downloaded from http://www.everyspec.com

5.2.2.6.11 Advisory and alerting. Devices displaying simultaneous and integrated information (e.g., multifunction displays) shall alert or cue operating personnel to information that becomes critical within the display.

5.2.2.7 Help.

5.2.2.7.1 Use. In addition to explicit error management aids (labels, prompts, advisory messages) and implicit aids (cueing), users shall be able to obtain further online guidance by requesting Help. (See 5.2.2.7.8, 5.4, and 5.7.2.1 for more information.)

5.2.2.7.2 Standard action to request help. A simple, standard action that is always available shall be provided to request Help.

5.2.2.7.3 Online help. Users shall be provided online help to include, at a minimum, definitions of allowable options, system capabilities, procedures, and ranges of values. Help shall be displayable at the user's request except when user testing indicates that help is not necessary.

5.2.2.7.4 Browsing help. Users shall be permitted to browse through online Help displays, just as they would through a printed manual, to gain familiarity with system functions and operating procedures.

5.2.2.7.5 Definitions. A dictionary of abbreviations and codes shall be available online.

5.2.2.7.6 Multilevel help. When an initial Help display provides only summary information, more detailed explanations shall be provided in response to repeated user requests for Help.

5.2.2.7.7 Consistent terminology. Online documentation, offline documentation, and help instructions shall use consistent terminology.

5.2.2.7.8 Prompts. Prompts shall be in accordance with the following:

a. Use. Prompts and help instructions shall be used to explain commands, error messages, system capabilities, display formats, procedures, and sequences, as well as to provide data.

b. Prompts for special modes. When operating in special modes, the system shall display the mode designation and file(s) being processed.

c. User confirmation. Before processing any user requests which would result in extensive or final changes to existing data, the system shall require user confirmation.

d. Confirm abort operations. When data entries or changes will be nullified by an abort action, the user shall be requested to confirm the abort.

e. Prompt for missing data. When missing data are detected, the system shall prompt the user.

f. Factual error messages. The dialog of factual error messages shall be strictly factual and informative for the user, with neither humor nor admonishment used in structuring the messages.

g. Location of error messages. Error messages shall appear as close as possible to the user entry that caused the message.

h. Multiple error messages. If a user repeats an entry error, the second error message shall be revised to include a noticeable change so that the user may be certain that the computer has processed the attempted correction.

i. Standard display. Prompting messages shall be displayed in a standardized area of the displays.

j. Explicit prompts. Prompts and help instructions for system controlled dialog shall be explicit. The user shall not be required to memorize lengthy sequences or refer to secondary written procedural references.

k. Prompt clarity. Prompts shall be clear and understandable. Prompts shall not require reference to coding schemes or conventions that may be unfamiliar to occasional users.

5.2.2.8 Printing display.

5.2.2.8.1 Hard copy. The system shall provide the capability for the user to obtain a paper copy of the exact contents of the alphanumeric or digital graphic display, where (a) mass storage is restricted, (b) mass stored data can be lost by power interruption, or (c) record keeping is required or desirable.

Downloaded from http://www.everyspec.com

5.2.2.8.2 Display print. The system shall provide the capability for the user to print a display by simple request (e.g., PRINT-SCREEN) without having to take a series of other actions first, such as calling for the display to be filed, specifying a filename, and then calling for a print of that named file.

5.2.2.8.3 Print page. The system shall provide the capability for the user to request printing of a single page, or sequence of pages, by specifying the page numbers.

5.2.2.8.4 Text displayed as printed. The system shall provide the capability for the user to display text as it will be printed, including underlining, boldface, subscript, superscript, special characters, special symbols, and different styles and sizes of type.

5.2.2.8.5 Flexible printing options. In printing text, the system shall provide the capability for users to select among available output formats (e.g., line spacing, character size, margin size, heading, and footing) and to specify the pages of a document to be printed.

5.2.2.8.6 Printers.

a. Use. Printers shall be used when a visual printed record of data is necessary or desirable.

b. Visibility. The printed matter shall not be hidden, masked, or obscured in a manner that impairs direct reading.

c. Contrast. A luminance contrast not less than 3:1 shall be provided between the printed material and the background on which it is printed.

d. Illumination. The printer shall be provided with illumination if the printed matter is not legible in the planned operational ambient illumination.

e. Take-up provision. A take-up device for printed material shall be provided.

f. Legibility. The print output shall be free from character line misregistration, character tilt, or smear.

g. Printed tapes. Information on the tape shall be printed so that it can be read as it is received from the machine without requiring the cutting and pasting of tape sections.

h. Print command acknowledgment. A user command to print shall be acknowledged within 2 seconds if a print delay beyond that time will occur.

i. Copies. The printer shall provide the capability to obtain a paper copy of the exact contents of the alphanumeric and digital graphic where:

(1) Mass storage is restricted.

(2) Mass stored data can be lost by power interruption.

(3) Visual record keeping is required or desirable.

j. Printing.

(1) Print display. The user shall be able to print information as displayed on a screen by simple request (e.g., PRINT SCREEN) without having to take a series of actions first.

(2) Print requested. The user shall have the capability to request printing of a single page or sequence of pages.

(3) Feedback. Feedback shall be provided to the user if the print request was denied with suggested actions required to correct the problem.

5.2.2.9 Data and message transmission.

5.2.2.9.1 General.

a. Functional integration. Data transmission functions shall be integrated with other information handling functions within a system such that a user is able to transmit data using the same computer system and procedures used for general entry, display, and other processing of data.

b. Consistent procedures. Procedures for preparing, sending and receiving data and messages shall be consistent from one transaction to another, and consistent with procedures for other information handling tasks.

Downloaded from http://www.everyspec.com

c. Minimal memory load on users. The system shall provide computer aids for automatic insertion of standard information, such as headers and distribution lists, in order to minimize memory load on the user.

d. Messages. Messages shall be in accordance with the following:

(1) Stored message forms. Where message formats conform to a defined standard or are predictable in other ways, pre-stored forms shall be provided to aid users in message preparation.

(2) Incorporate existing files. Users shall be allowed to incorporate an existing data file in a message, or to combine several files into a single message for transmission, and to combine stored data with new data when preparing messages for transmission. It shall not be necessary to reenter any data already entered for other purposes.

(3) Interrupt. Users shall be allowed to interrupt message preparation, review, or disposition and then resume any of those tasks from the point of interruption.

(4) Data group labels. Each individual data group or message shall contain a descriptive title, phrase, word or similar device to designate the content of the group or message.

(a) Location of message labels. Labels shall be consistently located adjacent to (and preferably above or to the left of) the data group or message they describe.

(b) Emergency or critical messages. Labels shall use an accentuating technique different and easily distinguished from the method used to highlight or code emergency or critical messages.

5.2.2.9.2 Addresses. When users must specify the address for messages, prompting shall be provided to guide the user in the process. Users shall be provided with an on-line directory showing all acceptable forms of message addressing for each destination in the system, and for links to external systems. Computer aids shall be provided so that a user can search an address directory by specifying a complete or partial name. Users shall be able to extract selected addresses from a directory for direct insertion into a header in order to specify the destination(s) for a message.

5.2.3 Displays – hardware.

5.2.3.1 Electronic displays. The following shall apply to direct view electronic displays (such as liquid crystal displays (LCD), plasma displays, light emitting diode (LED), cathode ray tube (CRT), and Electroluminescent displays) with a diagonal between 33 and 76 centimeters (13 and 30 inches). For displays with diagonals larger than 76 centimeters (30 inches) (large screen displays), see 5.2.3.2. For displays with diagonals between 12.7 and 33 centimeters (5.0 and 13 inches) (small screen displays), see 5.2.3.3. For displays smaller than 12.7 centimeters (5.0 inches) (handheld displays), see 5.2.3.4.

a. Maximum viewing distance of visual displays. The viewing distance from the eye reference point of the seated user to displays located close to their associated controls shall not exceed 70 centimeters (28 inches).

b. Viewing distance when seated in ejection seat. Viewing distance of up to 76 centimeters (30 inches) may be used with ejection seats.

c. Minimum viewing distance for visual displays. The effective viewing distance to displays shall be not less than 33 centimeters (13 inches) and preferably not less than 51 centimeters (20 inches).

d. Viewing dim signals. When periods of display observation will be short, or when dim signals must be detected, the viewing distance may be reduced to 25 centimeters (10 inches).

e. Viewing from close distance. Design shall permit the observer to view the display from as close as desired.

f. Long viewing distance. Displays which must be placed at viewing distances greater than 50 centimeters (20 inches) due to other considerations shall be appropriately modified in aspects such as display size, symbol size, brightness ranges, and resolution.

5.2.3.2 Large-screen displays. Large screen displays are electronic displays (liquid crystal, plasma, projection, and other displays) with a diagonal larger than 30 inches.

5.2.3.2.1 General guidance for large-screen displays. This section refers to both direct view and optical projection large screen displays. Specific guidance on direct view large screen displays is presented in 5.2.3.2.2 and specific guidance for optical projection large screen displays is presented in 5.2.3.2.3.

a. Use. Large-screen displays may be used under the following conditions:

Downloaded from http://www.everyspec.com

(1) A group of users frequently refers to the same information and is required to interact as a team, based on the same information.

(2) One or more members of a team of users must move about, yet must frequently refer to information required to make decisions – information they cannot carry with them or do not have displayed at their assigned position(s).

(3) Space or other constraints preclude the use of individual displays for each team member to call up commonly used information.

(4) When it is desirable to have general information available to persons who shall not interrupt ongoing group operations by looking over the shoulder(s) of individual user(s) to see individual displays.

b. Avoidance of large-screen displays. Large-screen displays shall be used only when the spatial and environmental conditions allow satisfactory observational geometry to ensure that all critical users have visual access in terms of viewing distance, angle and lack of interference from intervening objects, personnel or ambient lighting. If the display is optically projected, see 5.2.3.2.3.

c. Ratio of viewing distance/screen diagonal. The ratio of viewing distance to screen diagonal shall be between 3.0 and 6.0 and shall be between 2.0 and 10.

d. Maximum viewing distance for large-screen displays. The display shall not be placed farther from an observer than will provide appropriate resolution of critical detail presented on the display (see 5.4).

e. Minimum viewing distance for large-screen displays. The display shall not be closer to any observer than one-half the display width or height, whichever is greater.

f. Physical interruption of view of large-screen displays. A large-screen display shall be located with respect to critical observers so that the view of the display is not obscured regularly by persons moving in normal traffic patterns.

g. Control of displayed information of large-screen displays. Control of large-screen group display systems shall ensure that critical information cannot be modified or deleted inadvertently or arbitrarily. Changes in the group display shall be controlled by designated users. When individuals must make changes that are of interest only to themselves, a separate display shall be provided.

h. Content of displayed information of large-screen displays. The content of information displayed on a large screen shall be evident to a trained observer without requiring reference to display control settings.

5.2.3.2.2 Direct view large-screen displays (liquid crystal displays, plasma displays, and other non-projection displays). The luminance contrast for direct view large screen displays shall not be less than 1.5:1. Where feasible, dark characters shall be displayed on a light background unless the background appears to flicker. If the display includes color-coded objects, the background shall be a neutral color such as gray.

5.2.3.2.3 Optical projection large-screen displays. Optical projection large-screen displays shall meet the following:

a. General use. If ambient light can be properly controlled, optical projection displays are suitable for applications requiring group presentation, pictorial and spatial information, past history versus real-time presentation, synthetically generated pictures, simulation of the external world, and superposition of data from more than one source.

b. Avoidance. Front projection shall not be used where physical obstructions will impair viewing or where work areas require high ambient illumination for other activities.

c. Viewing distance. Viewing distance/image width relationship of optical projection displays for group viewing should conform to the preferred limits of table XVI and shall not exceed the acceptable limits indicated.

d. Off-center viewing. Off-center viewing of optical projection displays for group viewing should conform to the preferred limits of table XVI and shall not exceed the acceptable limits indicated.

e. Image luminance. Image luminance and light distribution of optical projection displays for group viewing shall conform to the preferred limits and shall not exceed the acceptable limits of table XVI.

f. Screen luminance. The screen center luminance at the maximum viewing angle shall be at least half its maximum luminance.

Downloaded from http://www.everyspec.com

g. Luminance ratio. The luminance ratio of optical displays shall conform to table XVII.

h. Legibility of projected data. Legibility of projected data shall meet the following:

(1) Font style. A simple style of numerals and letters shall be used (e.g., Arial, Times New Roman).

(2) Stroke width. Stroke width shall be 0.1667 to 0.125 of numeral or letter height but may be narrower for light markings on a dark background. Stroke width shall be the same for all letters and numerals of equal height.

(3) Letter width, numeral width, character spacing, and word spacing. Letter width, numeral width, character spacing, and word spacing shall be in accordance with 5.4.6.3.4, 5.4.6.3.5, and 5.4.6.3.9, respectively.

i. Contrast. Contrast may be either light on a dark background or vice versa, except where superposition is used. For subtractive superposition (at the source), data shall be presented as dark markings on a transparent background. For additive superposition (at the screen), data shall be presented as light markings on an opaque background. The use of colored markings against colored backgrounds of comparable brightness shall not be used.

j. Alignment. Misregistration of superimposed alphanumeric data or other symbols shall be minimized.

k. Keystone effects. The projector-screen arrangement shall minimize keystone effects (distortion of projected data proportions due to non-perpendicularity between projector and screen).

TABLE XVI. Group viewing of optical projection displays.

Factor	Optimum	Preferred limits	Acceptable limits
Ratio of $\frac{\text{viewing distance}}{\text{screen diagonal}}$	4.0	3.0 – 6.0	2.0 – 10
Angle off centerline	0°	0 – 20°	0 – 30°
Image luminance (no film in operating projector)	35 cd/m² 1/	27 – 48 cd/m² 1/	17 – 70 cd/m² 1/
Luminance variation across screen (ratio of maximum to minimum luminance)	1.0	1.5	3.0
Luminance variation as a function of viewing location (ratio of maximum to minimum luminance)	1.0	2.0	4.0
Ratio of $\frac{\text{ambient light}}{\text{brightest part of image}}$	0	0.002 – 0.01	0.1 max 2/

NOTES:

1/ For still projections, higher values may be used.

2/ For presentations not involving gray scale or color (e.g., line drawings, tables) 0.2 may be used.

TABLE XVII. Luminance ratio of optical projection displays.

Condition	Luminance ratio
Optimal ambient lighting conditions	500:1
Viewing charts, printed text, and other line work	Not less than 5:1
Animation & photographs with limited luminance range	Not less than 25:1
For images that show a full range of colors (or grays in black-and-white photographs)	Not less than 100:1

5.2.3.3 Small-screen displays. Small screens are defined as those screens with a diagonal between 12.7 and 33 centimeters (5.0 and 13 inches).

5.2.3.3.1 Redesign displays. When converting a display from traditional size to small screen, the design shall adapt but not copy the design of the current system.

Downloaded from http://www.everyspec.com

5.2.3.3.2 Font characteristics. Font size shall allow discrimination of similar characters (e.g., letter l/number 1, letter Z/number 2) and permits readability from a mission-appropriate distance. A common, standard font shall be used (e.g., Arial, Times New Roman, Courier, Verdana). Where users must read quickly under adverse conditions (e.g., poor lighting), a sans serif style shall be used (e.g., Arial, Verdana, Helvetica).

5.2.3.3.3 Text organization. To increase ability to skim text, subtitles and hypertext shall be used in text passages that are longer than a single screen. Variable length lines shall be avoided by use of hyphenation of words at line breaks to improve readability on small screens. Scrolling markers shall be provided when content cannot be displayed in one screen to enable users to identify where on the page they are.

5.2.3.4 Handheld displays. Handheld displays are defined as those screens with a diagonal smaller than 12.7 centimeters (5.0 inches).

5.2.3.4.1 Redesign displays. When converting a display from traditional size to handheld, the design shall adapt, but not copy, the design of the current system.

5.2.3.4.2 Important information. When designing handheld displays, important information shall be reachable in less than three key actions (e.g., scrolling, tapping).

5.2.3.4.3 Text organization. To increase ability to skim text, subtitles and hypertext shall be used in text passages that are longer than a single screen. Variable length lines shall be avoided by use of hyphenation of words at line breaks to improve readability on small screens. Scrolling markers shall be provided when content cannot be displayed in one screen to enable users to identify where on the page they are. Direct input pointers (e.g., touch-screen, light pens) shall be used in preference to indirect input pointers (e.g., trackball, mouse).

5.2.3.5 Three-dimensional (3-D) displays.

5.2.3.5.1 General. 3-D displays shall meet the following:

a. Use. Three-dimensional displays may be used only if they enhance human performance, the user population will have normal stereoscopic vision, and the field-of-view is suitable for the number of viewers intended. Tasks where 3-D displays have shown to enhance performance over 2-D displays when tasks require knowledge of three dimensions include tracking object(s), spatial judgment, interactive pointing tasks, and visual search.

b. Egocentric presentation. The primary presentation of data to a user shall be an egocentric perspective.

c. General use of dynamic displays. If dynamic displays are used, the temporal modulation of stereopsis shall be approximately 1.0 Hertz.

d. Horizon of dynamic displays. The user shall have the ability to manipulate the horizon line.

e. Depth range of dynamic displays. The depth range of a display shall be limited to 13 percent of the observer distance.

f. Color. Where stereoscopic images are color coded, secondary colors shall be used. Saturated primary colors shall be avoided. Red and blue shall not be used together as they can cause ambiguity in depth cues.

g. Information density. Depth-coded objects shall be separated spatially to eliminate disparity averaging, crowding, and repulsion. When using techniques such as wire frame or transparency in 3-D displays, the amount of detail shall be kept to a minimum.

h. Depth cues. Depth cues shall meet the following:

(1) Image size shall be scaled according to the disparity of the image.

(2) If accurate size perception is critical to task performance, size scaling shall be done for each user.

(3) Inaccurate occlusions shall not occur.

(4) Conflicting depth cues shall not be permitted. An example of a conflicting depth cue is if a dog was occluded by a house, but the dog was larger than the house. As the dog is behind the house, it implies farther distance; but as it is bigger, this implies that the dog is closer.

(5) Depth cues shall assimilate natural depth; exaggerated depth cues shall be avoided.

Downloaded from http://www.everyspec.com

(6) Grid lines shall be used as a depth cue.

5.2.3.5.2 Stereographic displays. Luminance shall be co-modulated with stereopsis, consistent with the type of image depicted. When stereoscopic effects are created by the presentation of separate images to each eye, the image intended for the left eye shall not be seen by the right eye, and vice versa.

a. Tolerance for vertical misalignment. Vertical misalignment or the tilt of one optical axis either up or down shall not exceed 10 minutes of arc.

b. Tolerance for rotation difference. Tolerance for rotational differences between stereo pairs shall not exceed a vertical misalignment of 10 minutes of arc.

c. Tolerance for magnification difference. Tolerance for either horizontal or vertical differences between stereo pair image size shall not exceed 1.5 percent. The vertical misalignment produced by the image disparity shall not exceed 10 minutes of arc.

d. Tolerance for luminance difference. Tolerance for luminance differences between stereo pairs shall not exceed 30 percent.

5.2.3.5.3 Autostereographic displays. When the user cannot maintain a direct view (e.g., move frequently, peripheral viewing), autostereographic displays shall not be used.

5.2.3.5.4 Volumetric displays. Volumetric displays may be used when displaying complex information in small boundaries, tasks that involve anticipation, and planning in three dimensions (e.g., collision avoidance). Volumetric displays shall only be used in low ambient light. Ray cursors shall be used in selection tasks.

5.2.3.6 Head-up displays (HUDs).

5.2.3.6.1 General guidance. HUDs shall be compatible with the capabilities and limitations of the human visual system.

5.2.3.6.2 Use. Information presented on HUDs shall be limited to critical data, which the user is required to monitor while simultaneously performing the primary visual task.

5.2.3.6.3 Windshield transmission rate. If a vehicle windshield is used as a HUD combiner, the total transmission through the windshield shall be not less than 70 percent as measured along the line of sight.

5.2.3.6.4 Eye-box size. Regardless of the optical display technology, the head motion, or eye-box size shall be not less than 11.5 centimeters (4.5 inches) wide, 6.5 centimeters (2.5 inches) high, and 15 centimeters (6.0 inches) deep.

5.2.3.6.5 Object angular displacement. The angular displacement of objects viewed through the combining glass assembly shall be not greater than 0.5 milliradian (1.7 minutes) of visual angle.

5.2.3.6.6 Apparent image focus distance. The apparent image focus distance of HUDs for a land-based vehicle application shall be equal to the approximate distance of the driver from the front of the vehicle.

5.2.3.6.7 Field of view. HUDs used on land-based vehicle applications shall have a field of view not less than 6.0 degrees (105 milliradians) above and 5.0 degrees (87 milliradians) below the horizontal and 12 degrees (209 milliradians) to the left and right.

5.2.3.6.8 Exit pupil. HUDs shall have a minimum exit pupil (that area within a collimated beam in which the entire image formed by an objective lens is capable of being seen) of 72 millimeters (2.8 inches).

5.2.3.6.9 Characters and symbols. Characters and symbols for HUDs shall meet the following:

a. Alphanumeric character heights. The height for HUD alphanumeric characters shall be not less than 8.1 milliradians (28 minutes) of visual angle.

b. Non-alphanumeric character heights. The height for HUD non-alphanumeric characters shall be not less than 9.9 milliradians (34 minutes) of visual angle.

c. Raster lines/symbol height – alphanumeric characters. For head-up raster displays, alphanumeric characters shall not use less than 16 raster lines/symbol height.

Downloaded from http://www.everyspec.com

d. Raster lines/symbol height – non-alphanumeric characters. For head-up raster displays, non-alphanumeric characters shall use not less than 20 raster lines/symbol height.

e. Symbol brightness. Symbols shall be bright enough to be legible under all expected ambient lighting conditions. When legibility in direct sunlight or background luminance of 34,000 cd/m² or greater is required, symbol brightness shall be not less than 50,000 cd/m². For most high ambient light applications, symbol brightness shall be 6,900 to 10,300 cd/m².

f. Symbol luminance. Symbol luminance shall be adjustable.

g. Symbol line width. The line width of symbols used in HUDs shall be not less than 0.5 milliradian (1.7 minutes). For most applications, symbol line width shall be 1.0±0.2 milliradian (3.4±0.7 minutes).

5.2.3.7 Helmet-mounted displays (HMDs).

5.2.3.7.1 Visual orientation. All required mission symbology shall be in the user's instantaneous field of view, regardless of head position.

5.2.3.7.3 Symbol location. Information shall be capable of being displayed within 25 degrees (0.44 radian) of the normal line of sight, typically 15 degrees (0.265 radians) below horizontal.

5.2.3.7.5 Gray shades for alphanumeric characters. Monochromatic HMDs shall provide not less than six shades of gray for alphanumeric and simple graphic information.

5.2.3.7.7 Gray shades for complex graphic data. Monochromatic HMDs shall provide not less than six shades of gray for complex graphic or sensor data.

5.2.3.7.9 Field of view. The field of view shall provide acceptable visual search performance, object recognition, and spatial orientation. Acceptable field of view size is dependent on specific mission requirements.

5.2.3.7.11 Unrestricted view. Users shall have an unrestricted view of all displays, controls, and the real-world environment as necessary.

5.2.3.7.13 See-through displays. Display imagery on see-through displays shall be visually distinctive from any anticipated background variation.

5.2.3.7.15 Mode selection. As applicable, a user selectable optional display mode shall be provided to reduce display clutter.

5.2.3.7.17 Attentional distraction. HMDs shall minimize attentional distraction and user cognitive load demand by providing only task-oriented, essential, integrated information with minimum memory requirements.

5.2.3.7.19 Salient cues. HMDs shall provide only salient cueing (e.g., directing attention to critical information).

5.2.3.7.21 Standardized graphics. All information presented graphically (e.g., positional, topographic, and spatial information) shall use standardized symbols.

5.2.3.7.23 Helmet characteristics. Helmet characteristics shall meet the following:

a. All HMD designs shall attenuate head motion in the 4.0 Hertz range.

b. Weight distribution of helmet mounted items shall be balanced to avoid or minimize neck strain, fatigue, and helmet movement relative to the user's head.

c. Any required external attachments shall not restrict user head or shoulder motion.

d. Helmet mounted display cables shall not provide a path to transmit unsafe loads to the crewmembers helmet, head, or neck. If a cable separation device/connector is utilized, its position on the cable shall be placed in a location that minimizes the cable length remaining attached to the helmet after cable separation. The projection/exposed length of the cable shall be minimized, but the cable shall not restrict normal head movement.

e. HMDs shall be adjustable for individual eyes to be properly aligned to the system.

f. The HMD shall remain secure in relation to the eye during task performance.

Downloaded from http://www.everyspec.com

g. The HMD shall not require excessive tightening to achieve the necessary stability.

5.2.3.7.25 Eye dominance. HMDs shall support left or right eye dominance.

5.2.3.7.27 Depth perception. Binocular HMDs shall support depth perception if necessary for the task.

5.2.3.8 Liquid crystal displays (LCDs). Backlighting (if appropriate) and viewing angle shall be adjustable by users. The image shall be light characters on a dark background for reflective LCDs and dark characters on a light background for transmissive (backlighted) LCDs. Off-axis viewing of LCDs shall be possible.

5.2.3.9 Plasma displays.

5.2.3.9.1 General. Unless specified below, plasma displays shall be in accordance with 5.2.3.13.

5.2.3.9.2 Intensity control. The dimming of plasma displays shall be compatible with the dimming of incandescent lamps.

5.2.3.9.3 Color-coding. With the exception of red alpha numeric displays, plasma display color-coding shall be in accordance with 5.2.3.13.17; however, red plasma displays shall not be located near red lights used as outlined in 5.2.3.13.17.

5.2.3.9.4 Lamp testing. Plasma indicator lights with 100,000 hours or longer mean time between failure (MTBF) shall not require a lamp test capability.

5.2.3.10 Light-emitting diodes (LEDs).

5.2.3.10.1 General. Unless specified below, LEDs shall be in accordance with 5.2.3.13.

5.2.3.10.2 Use. LEDs may be used for transilluminated displays, including legend and simple indicator lights, and for matrix (alphanumeric) displays, only if the display is bright enough to be readable in the environment of intended use (enclosure, bright sunlight, low temperature). They may be used for graphics applications where display visibility from multiple viewer positions, high MTBF, low display volume, and low power consumption are more important than high resolution, high brightness, high power consumption, or sunlight readability.

5.2.3.10.3 Intensity control. The dimming of LEDs shall be compatible with the dimming of incandescent lamps.

5.2.3.10.4 Color-coding. With the exception of red alpha numeric displays, LED color-coding shall be in accordance with 5.2.3.13.17; however, red LEDs shall not be located near red lights used as outlined in 5.2.3.13.17.

5.2.3.10.5 Lamp testing. LED indicator lights with 100,000 hours or longer MTBF shall not require a lamp test capability.

5.2.3.11 Other displays (CRTs, electroluminescent displays, others). Designs must incorporate good human engineering practice and state of the art methods until detailed specification data can be developed.

5.2.3.12 Dot-matrix/segmented displays. The following provisions apply to displays only when used to present alphanumeric and symbolic information via dot-matrix or segmentation.

5.2.3.12.1 Use. Dot-matrix, 14 segment, and 16 segment displays may be used for applications involving interactive computer systems, instruments, avionics, navigation, and communication equipment, where the presentation of alphanumeric, vector-graphic, symbolic, or real-time information is required.

5.2.3.12.2 Use of seven-segment displays. Seven-segment displays shall be used for applications requiring only numeric information.

5.2.3.12.3 Symbol definition. Dot-matrix characters that are not formed by pixels shall contain not less than 5.0 by 7.0 dots, with 7.0 by 9.0 dots preferred.

5.2.3.12.4 Symbol definition for dot-matrix displays with symbol rotation. If system requirements call for symbol rotation, dot-matrix characters shall contain not less than 8 by 11 dots, with 15 by 21 dots preferred.

Downloaded from http://www.everyspec.com

5.2.3.12.5 Alphanumeric character and symbol sizes. Alphanumeric characters and symbols shall subtend not less than 4.7 milliradians (16 minutes) of visual angle as measured from the longest anticipated viewing distance.

5.2.3.12.6 Use of upper case. Alphanumeric characters shall be upper case.

5.2.3.12.7 Viewing angle. The optimum viewing angle is perpendicular to the display. Viewing angle of dot-matrix or segmented displays shall be not more than 35 degrees off axis.

5.2.3.12.8 Emitter color. Monochrome displays shall use the following colors having the following dominant wavelengths in order of preference: green (555 nanometer), yellow (575 nanometer), orange (585 nanometer), and red (660 nanometer). Blue emitters shall be avoided.

5.2.3.12.9 Emitter color for dot-matrix/segmented displays viewed with protective eyewear. The selected color shall be visible through laser protective (or other) eye wear required to be worn by the user.

5.2.3.12.10 Intensity control. Where applicable, dimming controls shall be provided to maintain appropriate legibility and user dark adaptation levels.

5.2.3.12.11 Location of red alphanumeric LEDs/segmented displays. Red LEDs/segmented displays shall not be grouped with or located adjacent to red warning lights.

5.2.3.13 Transilluminated displays.

5.2.3.13.1 General types of transilluminated displays. Transilluminated displays may include the following:

a. Single- and multiple-legend lights that present information as words, numbers, symbols, and abbreviations.

b. Simple indicator lights.

c. Transilluminated panel assemblies that present qualitative status or system readiness information.

5.2.3.13.2 Use. Transilluminated displays shall be used to provide qualitative information to the user requiring either an immediate reaction by the user, or to draw attention to an important system status.

5.2.3.13.3 Use of transilluminated displays for maintenance. Transilluminated displays may also be used occasionally for maintenance and adjustment functions.

5.2.3.13.4 Equipment response. Lights, including those used in illuminated push buttons, shall display equipment response and not merely control position.

5.2.3.13.5 Limited use of lights and indicators. Lights and related indicators shall be used sparingly and only to display that information necessary for effective system operation.

5.2.3.13.6 Positive (active) feedback. Changes in display status shall signify changes in functional status rather than results of control actuation alone.

5.2.3.13.7 Absence of signal usage. The absence or loss of a signal or visual indication shall not be used to denote a “malfunction”, “no-go”, or “out-of-tolerance” condition, or to indicate a “ready” or “in tolerance” condition, unless the status or caution light filament and its associated circuitry can be easily tested by the user and user perception of such events is not time-critical.

5.2.3.13.8 Powered off signal. The absence of a “power on” signal or visual indication may be used to indicate a “power off” condition for operational displays, but not for maintenance displays.

5.2.3.13.9 Grouping. Master caution, master warning, master advisory, and summation lights used to indicate the condition of an entire subsystem shall be set apart from the lights which show the status of the subsystem components, except as required by 5.2.2.1.6.

5.2.3.13.10 Location. When a transilluminated indicator is associated with a control, the indicator light shall be located so that it can be associated with the control without error. The indicator light shall be visible to the user during control operation.

Downloaded from http://www.everyspec.com

5.2.3.13.11 Location of critical functions. For critical functions as defined by the task analysis, indicators shall be located within 15 degrees of the user's normal line of sight (see figure 25). Warning lights shall be an integral part of, or located adjacent to, the lever, switch, or other control by which the user is to take action.

5.2.3.13.12 Luminance. The luminance of transilluminated displays shall be compatible with the expected ambient illuminance. The luminance shall be at least 10 percent greater than the surrounding luminance. The following factors shall be considered in determining luminance levels:

a. Within-display contrast, such as contrast between light ON versus OFF modes; two-level contrast if display requires a dormant luminance to read an identifying label, plus an active luminance increase to indicate functioning mode.

b. Display-surround contrast, such as contrast between the illuminated indicator and its immediate panel surface, in which case effects of ambient reflection on either the display or surround shall be compensated for by such means as increased display luminance, surround surface modification, or use of filters or shields.

c. User visual-adaptation criteria, such as display luminance, shall be compatible with the user's ability to detect low-level signals or targets in the external visual environment, and perceive faint signals on a CRT, or read red-lighted instruments provided for night operation.

d. Conspicuity and attention-demand criteria, such as luminances, shall provide the alerting required to ensure that the user will not miss a critical warning, caution, or advisory message.

e. Distraction, such as luminance levels, shall not dazzle or otherwise distract the user in a manner that could be detrimental to safe, efficient system operation.

5.2.3.13.13 Glare. Where glare must be reduced, the luminance of transilluminated displays shall be not more than 300 percent of the surrounding luminance.

5.2.3.13.14 Luminance control. When displays will be used under varied ambient illuminance, a dimming control shall be provided. The range of the control shall permit the displays to be legible under all expected ambient illuminance. The control shall be capable of providing multiple step or continuously variable illumination. Dimming to full OFF may be provided in noncritical operations, but shall not be used if inadvertent failure to turn on an indicator could lead to critical user failures, i.e., failure to detect or perform a critical step in an operation.

5.2.3.13.15 False indication or obscuration. Direct or reflected light shall not make indicators appear illuminated when they are not. Direct or reflected light shall not make indicators appear extinguished when they are illuminated. Reflection shall be minimized by proper orientation of the display with respect to the observer.

5.2.3.13.16 Contrast within the indicator. The luminance contrast (see MIL-HDBK-1908) within the indicator shall be not less than 2:1. This requirement does not apply to special displays specifically designed for legibility in sunlight. For low ambient illumination applications, this ratio shall be not less than 9:1, with the background luminance less than the figure luminance.

5.2.3.13.17 Color-coding. With the exception of aircrew station and training equipment applications, transilluminated displays shall be in accordance with the color-coding scheme presented in table XII, in accordance with Type I – Aviation colors of SAE-AS25050.

5.2.3.14 Legend lights.

5.2.3.14.1 Use. Legend lights shall be used in preference to simple indicator lights except where design considerations demand that simple indicators be used.

5.2.3.14.2 Positive versus negative legend – dark adaptation. When the user's dark adaptation must be maintained, illuminated label/opaque background format shall be used and illuminated background/opaque label format shall be used only for critical warning indicators (e.g., master warning lights).

5.2.3.14.3 Positive versus negative legend. Where user dark adaptation is not required, illuminated background/opaque label format shall be used.

5.2.3.14.4 Contrast reversal. Where user dark adaptation is not required, contrast reversal may be employed to designate displays which have physical appearance similar to legend switches on the same panel.

Downloaded from http://www.everyspec.com

5.2.3.14.5 Legibility in high illumination. Where legibility in high ambient illumination is critical, illuminated label/opaque background format shall be used and illuminated background/opaque label format shall be used only for critical warning indicators (e.g., master warning lights).

5.2.3.14.6 Lettering. The size and other characteristics of lettering shall be in accordance with 5.4.6.3.

5.2.3.14.7 Visibility and legibility. In other than aircrew stations, and with the exception of warning and caution indicators, the lettering on single-legend indicators shall be visible and legible whether or not the indicator is energized.

5.2.3.14.8 Multi-function legends. Indicators designed to provide alternately presented legends shall present only one legend at a time, i.e., only the legend in use shall be visible.

5.2.3.14.9 Stacked legends. Indicators using "stacked" legends shall be in accordance with the following:

a. When the rear legend is energized, it shall not be obscured by the front legend.

b. Parallax shall be minimized.

c. Front and rear legends shall have approximately equal brightness.

d. Front and rear legends shall have approximately equal legend/background contrast.

5.2.3.14.10 Design. The legend face shall be in the plane of the panel which houses it (not recessed). The legend face shall have large enough front areas to accommodate the anticipated legends without requiring unreasonable abbreviation.

5.2.3.14.11 Interchanging legends. The possibility of losing or interchanging legends shall be minimized by such techniques as captive legends.

5.2.3.14.12 Legend border. There shall be a border around each legend not less than the width of the letter "H" of the selected font.

5.2.3.14.13 Visual contrast. Optimum visual contrast shall be provided between the legend lettering and its background.

5.2.3.14.14 Illumination. A legend light shall illuminate immediately upon the occurrence of the event described by its legend. A legend light shall go out when that event terminates.

5.2.3.14.15 Light leakage. There shall not be light leakage around the illuminated light.

5.2.3.14.16 Redundancy. Lamps shall have redundant filaments or dual bulbs; that is, when one filament or bulb fails, the second remains illuminated. The decreased intensity of the light indicates the need for lamp replacement.

5.2.3.14.17 Malfunctions. Legend-light indications for isolating malfunctions shall be provided only down to the point dictated by the system maintenance philosophy. Legend-light indications shall operate in a fail-safe fashion. Failure of a legend light or its indicator circuit shall not influence or cause failure of its monitored circuits and equipment.

5.2.3.15 Simple indicator lights.

5.2.3.15.1 Use. Simple indicator lights shall be used when design considerations preclude the use of legend lights.

5.2.3.15.2 Spacing. The spacing between adjacent edges of simple round indicator light fixtures shall be sufficient to permit unambiguous labeling, signal interpretation, and convenient bulb removal.

5.2.3.15.3 International conventions and standards. International conventions and standards for aircraft, highway vehicles, and marine craft shall be followed in design, location, and luminance characteristics of all military systems utilizing public roadways, airways, or navigable streams, rivers, and sea lanes.

Downloaded from http://www.everyspec.com

5.2.3.15.4 Brightness. Simple light displays used on control panels shall be sufficiently bright for the user to easily differentiate between an ON and OFF condition. The indicator also shall be designed or otherwise positioned or shielded so that bright ambient light will not cause the indicator to appear lighted when it is not, and so that the lighted indicator will not reflect on other critical viewing surfaces and thus diminish viewing effectiveness of a display or window. Light indicators shall not be so bright as to create "dazzle" or destroy user dark adaptation where required.

5.2.3.15.5 Coding. Simple indicator lights shall be coded in accordance with table XVIII; however, the different sizes shown are intended only for the attention-getting value that larger lights of at least equal luminance provide in relation to indicator lights of lesser importance.

TABLE XVIII. Color-coding of lights.

Size/type	Color				
	Red	**Yellow**	**Green**	**White**	**Blue**
≥25 mm (1 in), flashing (3 to 5 sec)	Emergency condition (impending personnel or equipment disaster)				
≥25 mm (1 in), steady	Master summation (system or subsystem)	Extreme caution (impending danger)	Master summation (system or subsystem)		
≤13 mm (0.5 in), steady	Malfunction; action stopped; failure; stop action	Delay; check; recheck	Go ahead; in tolerance; acceptable; ready	Functional or physical position; action in progress	Advisory

5.2.3.16 Transilluminated panel assemblies.

5.2.3.16.1 Use. Transilluminated (integrally lighted) panel assemblies may be used to provide any of the following:

a. Illuminated labels for a control panel.

b. A light source for illuminating transilluminated control knobs.

c. Illuminated association markings on a control panel (e.g., connecting lines between controls, outlines around a functionally-related group of controls or displays).

d. A pictorial representation of a system process, communication network, or other information/component organization.

5.2.3.16.2 Large, single pictorial graphic panels. Large, single pictorial graphic panels, used to display system processing, communications networks, or similar applications, shall comply with requirements for visibility, legibility, color, and illumination as specified herein.

5.2.3.16.3 Re-lamping. When replaceable lamps are used for integral lighting, they shall be readily accessible without disconnecting the panel(s).

5.2.3.16.4 Lamp redundancy. A sufficient number of lamps shall be provided so that failure of one lamp will not cause any part of the display to be unreadable.

5.2.3.16.5 Brightness. Brightness of illuminated markings and transilluminated controls shall be compatible with the ambient environment and operating conditions (e.g., dark adaptation requirements). Brightness control (dimming) by the user shall be provided where applicable to maintain appropriate visibility and user dark adaptation level. Brightness variation among separate panels on the same lighting circuit shall not exceed 1:7.

5.2.3.16.6 Visibility in various light levels. Integrally lighted panels shall be designed so that all panel markings are equally visible throughout the range of panel light level adjustment.

5.3 Speech and audio systems.

5.3.1 Audio displays.

Downloaded from http://www.everyspec.com

5.3.1.1 General. Speech input is received through microphones for processing and transmission through voice communication systems or for entry to speech recognition systems. Audio displays are used not only to present voice communication from another source but also to present sonically-derived sensor data, synthetic speech, alerting and cueing signals, and other acoustically coded information. Unlike vision, which can be interrupted by eyelid closure, auditory input is constant. The perception of visual and auditory stimuli is influenced by the ability of the human brain to integrate this input. Vision integrates spatial contrast border, brightness, and color information while audition integrates temporal, spatial, intensity, and frequency information. Visual and auditory integration times vary and depend upon several stimulus parameters but are normally short. These differences and others discussed in this section shall be considered in planning and designing systems utilizing speech or other acoustic signals.

5.3.1.1.1 Use. Audio displays shall be provided under the following conditions:

a. When information to be processed is short, simple, and transitory, requiring an immediate or time-based response.

b. When the common mode of visual display is restricted by over-burdening, ambient light variability or limitation, user mobility, degradation of vision by vibration, high G-forces, hypoxia, or other environmental considerations, or anticipated user inattention.

c. When the criticality of the event makes supplementary or redundant notification desirable.

d. When it is desirable to warn, alert, or cue the user to subsequent additional response.

e. When custom or usage has created anticipation of an audio display.

f. When voice communication is necessary or desirable (e.g., hands-busy situations).

5.3.1.1.2 Signal type. When an audio presentation is required, the optimum type of signal shall be presented in accordance with table XIX and shall be in accordance with the following.

a. Audio signal interference. Audio signals shall not interfere with other sound sources, including verbal communication.

b. Auditory presentation. Auditory presentation is preferred over visual presentation under any of the following circumstances:

(1) For signals of acoustic origin.

(2) For warning signals to call attention to imminent or potential danger.

(3) For situations when many displays are visually presented (e.g., piloting an airplane).

(4) For presenting information independently of head orientation.

(5) For situations when environmental conditions limit vision or makes seeing impossible.

(6) For conditions of anoxia or high positive G-forces.

(7) When signals must be distinguished from noise, especially periodic signals in noise.

Downloaded from http://www.everyspec.com

TABLE XIX. Functional evaluation of audio signals.

Function	Type of signal		
	Tones (periodic)	**Complex sounds (non-periodic)**	**Speech**
Quantitative indication	Poor, maximum of 5 to 6 tones absolutely recognizable.	Poor, interpolation between signals inaccurate.	Good, minimum time and error in obtaining exact value in terms compatible with response.
Qualitative indication	Poor-to-fair, difficult to judge approximate value and direction of deviation from null setting unless presented in close temporal sequence.	Poor, difficult to judge approximate deviation from desired value.	Good, information concerning displacement, direction, and rate presented in form compatible with required response.
Status indication	Good, start and stop timing. Continuous information where rate of change of input is low.	Good, especially suitable for irregularly occurring signals (e.g., alarm signals).	Poor, inefficient; more easily masked; problem of repeatability.
Tracking	Fair, null position easily monitored; problem of signal-response compatibility.	Poor, required qualitative indications difficult to provide.	Good, meaning intrinsic in signal.
General	Good for automatic communication of limited information. Meaning must be learned. Easily generated.	Some sounds available with common meaning (e.g., fire bell). Easily generated.	Most effective for rapid (but not automatic) communication of complex, multi-dimensional information. Meaning intrinsic in signal and context when standardized. Minimum of new learning required.

5.3.1.1.3 Signal meaning. Each audio signal shall have only one meaning. The ear acts as an effective detector of periodic signals in noise. Even when it is considerably weaker than the background noise, if the signal is a sinusoid (pure tone) or a combination of sinusoids (complex tone), the ear can detect it. The ear also efficiently detects periodic modulation in the very low frequency range and responds to variations in intensity or frequency.

5.3.1.1.4 Apparent urgency. The attention gaining characteristics of the signals in a set (e.g., rapidity of pulse pattern, frequency, intensity) shall match the relative priority of the signal.

5.3.1.1.5 Use with several visual displays. If immediate discrimination is not critical to personnel safety or system performance, one audio signal may be used in conjunction with several visual displays.

5.3.1.1.6 Speech supplements. When speech supplements are used, the length of the initial alerting and the actual message shall not interfere with other auditory inputs including interpersonal voice communication unless the message is critical.

5.3.1.1.7 Silent operations at night. In equipment designed for silent operation at night, the sound level at the ear under an earphone shall be not greater than 50 decibels on the A weighted scale (dBA).

5.3.1.1.8 Manual overrides. Noncritical audio signals shall be capable of being turned off at the discretion of the user. Where the user has the capability to turn off noncritical audio signals, a visual indication that the signal has been turned off shall be provided to the user. For overrides of warning signals, see 5.3.1.5.7.

5.3.1.1.9 Reliability. The design of audio display devices and circuits shall preclude false alarms. The audio display device and circuit shall be designed to preclude alarm signal failure in the event of system or equipment failure and vice versa. All audio displays shall be equipped with circuit test devices or other means of operability test.

5.3.1.1.10 Individual speaker recognition. If individual speaker recognition is used for security purposes (to deny access to classified material by unauthorized personnel), it shall be used in combination with some other control method in order to attain sufficient reliability.

5.3.1.1.11 Sensor applications. Audio displays for sensor systems such as sonar and electronic countermeasures shall be made compatible with the criteria stated herein. Deviations shall require approval of the procuring activity.

5.3.1.1.12 Aircrew stations. Aircrew stations will be designed using the guidance of JSSG-2010.

Downloaded from http://www.everyspec.com

5.3.1.2 Audio signals.

5.3.1.2.1 Warning signals. Warning signals shall be in accordance with the following:

a. Required warning signals. Signals shall be provided to warn personnel of impending danger, to alert the user to a critical change in system or equipment status, and to remind the user of a critical action or actions that must be taken.

b. Increasing probability of detection. A warning or caution signal shall provide the user with a greater probability of detecting the triggering condition than normal observation would provide in the absence of the signal. [NOTE: Certain audio signals have been standardized for aircraft use by joint service and international agreements. Audio signals for future aircraft design shall conform to these agreements.]

c. Nature of signals. Warning signals shall consist of distinctive complex sounds of exceptional attention-getting value and be presented at a level of at least 15 dBA above the noise environment.

d. Types of signals. Audio warning signals shall be either a two-element or single-element signal as appropriate to the situation in consideration of the total acoustic signal environment.

(1) Two-element signals. When reaction time is critical and a two-element signal is necessary, an alerting signal of 0.5 second duration shall be provided. All essential information shall be transmitted in the first 2 seconds of the identifying or action signal.

(2) Single-element signal. A single-element signal is permissible (i.e., when reaction time is critical) and all essential information shall be transmitted in the first 0.5 second.

5.3.1.2.2 Caution signals. Caution signals shall meet the following:

a. Distinct from warning signals. Caution signals shall be readily distinguishable from warning signals.

b. Awareness signal. Caution signals shall be used to indicate conditions requiring awareness, but not necessarily immediate action.

c. Nature of caution signals. The nature of caution signals shall be in accordance with the following:

(1) Complexity. Caution signals shall consist of distinctive complex sounds at least 15 dBA above the noise environment.

(2) Persistence. Caution signals shall persist intermittently until restoration of normal conditions or manual shut off.

(3) Reset. Upon termination, caution signals shall be automatically reset to respond to the next initiating condition.

(4) Volume control. A volume control may be incorporated provided full volume is automatically restored upon initiation of the next caution signal.

(5) Two-element caution signals. Two-function caution signals, which provide both the alerting and identification functions, shall be used where the total number of caution signals is small.

(6) Single-element caution signals. A single-function caution signal consists of a signal only and shall be accompanied by a visually-presented message identifying the specific nature of the caution situation.

5.3.1.2.3 Alerting signals. Alerting signals shall meet the following:

a. General. Alerting signals shall be provided whenever there is a requirement for immediate response to a situation outside of the user's normal task sequence, or some system function needs attention on an irregular basis, or there may be a minor component failure.

b. Nature of alerting signals. The nature of alerting signals shall be in accordance with the following:

(1) Composition. Alerting signals shall be of a spectral composition and character more demanding of attention than either advisory or cueing signals.

(2) Periodicity. Alerting signals may be momentary or continuous in nature as appropriate, but if momentary, the alerting signals shall be repeated periodically until either proper action is taken or the signal is turned off.

Downloaded from http://www.everyspec.com

(3) Persistence. Similarly, continuously-presented alerting signals shall persist until initiation of proper action or signal turnoff.

(4) Reset. After the signal is terminated, it shall be automatically reset to respond to the next initiating condition.

(5) Volume. Alerting signals shall exceed the noise level in the critical band for all major signal components by a least 20 decibels.

c. Differentiation from routine signals. Alerting signals intended to bring the user's attention to a malfunction or failure shall be differentiated from routine signals such as bells, buzzers, and normal operation noises.

5.3.1.2.4 Advisory signals. Audio signals may be provided to transmit information of an advisory nature which does not require specific user response or acknowledgment.

a. Advisory signal in quiet areas. In quiet areas (below 45 dBA), advisory signals shall be presented at a level of 50 to 70 dBA.

b. Advisory signal in noise background. Where there is a noise background, they shall be at least 20 dB above the noise level in the critical band centered on each major component frequency of the advisory signal.

c. Cueing signals. Cueing signals may be used in combination with visually presented messages providing specific task-element instructions.

d. Nature of cueing signals. Cueing signals shall be short, tonal, and non-annoying but distinctive in character. As a general rule, cueing signals shall exceed the noise level in the critical band by at least 20 decibels.

e. Appropriate use of cueing signals. Audio cueing signals shall be provided for pacing user actions in situations requiring timely execution of task elements but where: (1) user attention may be diverted from the task at hand, or (2) the user depends on the cueing signal to know when to perform the task. Consideration shall be given to instrumenting the cueing signal system so as to generate a repetition of the signal if the user fails to perform the desired action.

5.3.1.2.5 Prioritization. When there is a possibility of simultaneous presentation of automatically initiated messages, a message priority system shall be provided, such that the most critical message overrides for initial presentation any messages occurring lower on the priority list. Following initial presentation of the top-priority message, other messages shall be presented in the priority order except that no caution messages shall be presented until all warning messages are terminated.

5.3.1.2.6 Relation to visual displays. When used in conjunction with visual displays, audio warning devices shall be supplementary or supportive and shall be used to alert and direct user attention to the appropriate visual display.

5.3.1.3 Characteristics of audio warning signals.

5.3.1.3.1 Warning recognition time. Warning signals shall be sufficiently distinctive so that they can be unambiguously recognized as warning signals within 0.5 second of initiation. Single-element signals shall, in addition, convey full meaning of the signal within that initial 0.5-second period. In the worst case, two-element signals shall convey full meaning of the signal within 2.5 seconds of initiation.

5.3.1.3.2 Control of warning signals. Warning signals may be either manually or automatically initiated, whichever is more appropriate to the circumstances. Manually initiated signals shall also be manually terminated. Automatically initiated signals shall be in accordance with the following:

a. Persistence. Automatically initiated signals shall persist until either automatically or manually terminated.

b. Automatic termination. Automatic termination shall not be on a time basis but rather on either initiation of action to restore normal conditions or upon restoration of normal conditions.

c. Manual termination. Provision for manual termination shall be provided.

d. Automatic reset. Automatic reset for the next initiating condition shall be provided for all signals which can be automatically initiated.

e. Volume control. Local area volume control (with volume reduction limited to ensure signal audibility) may be incorporated provided full volume is automatically restored upon initiation of the next warning signal.

Downloaded from http://www.everyspec.com

5.3.1.3.3 Frequency. Frequency shall meet the following:

a. Frequency range. The frequency range shall be between 250 and 8000 Hertz and, if possible, between 500 and 2000 Hertz.

(1) Difference from background. The selected frequency band shall differ from the most intense background frequencies and shall be in accordance with other criteria in this section.

(2) Signals traveling long distances. When signals must travel over 300 meters (985 feet), sounds with frequencies below 1000 Hertz shall be used.

(3) Signals traveling through obstacles. Frequencies below 500 Hertz shall be used when signals must bend around obstacles or pass through partitions.

b. Electric power frequency avoidance. The frequency of a warning tone shall be different from that of the electric power employed in the system.

5.3.1.3.4 Intensity. Intensity shall meet the following:

a. Compatibility with acoustical environment. The intensity, duration, and source location of audio alarms and signals shall be compatible with the acoustical environment of the intended receiver as well as the requirements of other personnel in the signal areas.

b. Compatibility with existing signal codes. Warning signal characteristics and meanings selected for a system or facility shall be compatible with signals already established for the particular warning situation.

c. Compatibility with other critical signals. No warning signal shall be of such a character as to preclude hearing any other warning signal or reception of vital voice communication.

d. Compatibility with clothing and equipment. Audio signals shall be loud enough to be heard through equipment or garments (e.g., parka hood, CBRNE protective hood, single or double hearing protective devices) covering the ears of the listener. Audio signals shall be loud enough to be understood through equipment or garments (e.g., parka hood, CBRNE protective hood, hearing protective devices) covering the ears of the listener.

e. Damage risk control. Audio warning signals shall not be of such intensity as to cause discomfort or "ringing" in the ears. Levels shall not exceed 115 decibels measured at the ear of the listener.

5.3.1.4 Signal characteristics in relation to operational conditions and objectives.

5.3.1.4.1 Audibility. A signal-to-noise ratio of at least 10 decibels shall be provided in at least one octave band between 200 and 5000 Hertz at the operating position of the intended receiver. Signal to noise ratios can be greater as long as the levels do not exceed 115 decibels at the ear of the listener.

5.3.1.4.2 Alerting capability. Alerting capabilities shall meet the following:

a. Attention and avoidance of startle reaction. Signals with high alerting capacity shall be provided when the system or equipment requires the user to concentrate attention. Such signals shall not be so startling as to preclude appropriate responses or interfere with other functions by holding attention away from other critical signals. To minimize startle reactions, the increase in sound level during any 0.5-second period shall be not greater than 30 decibels. In addition, the first 0.2 second of a signal shall not be presented at maximum intensity, use square topped waveforms, or present abruptly rising waveforms.

b. Onset and sound pressure level. The onset of critical alerting signals shall be sudden. A relatively high sound pressure level shall be provided as specified in 5.3.1.4.1.

c. Dichotic presentation. When earphones will be worn in the operational situation, a dichotic presentation shall be used whenever feasible, alternating the signal from one ear to the other by means of a dual-channel headset.

d. Headset. When the user is wearing earphones covering both ears during normal equipment operation, the audio alarm signal shall be directed to the user's headset as well as to the work area. Headset shall not block outside critical alarms. Binaural headsets shall not be used in any operational environment below 85 dBA where sounds that provide the user with useful information cannot be directed to the user's headset. Such sounds may include voices, machine noise that indicates wear or malfunction, and other audible indications of system performance/mission status.

5.3.1.4.3 Discriminability. Discriminability shall meet the following:

Downloaded from http://www.everyspec.com

a. Use of different characteristics. When several different audio signals are to be used to alert an user to different types of conditions, discriminable differences in intensity, pitch, beats and harmonics, or temporal patterns shall be provided. If absolute discrimination is required, the number of signals to be identified shall not exceed four. Signal intensity shall not be used alone as a means of discriminating between signals. Warnings shall differ on two or more parameters.

b. Audio signal coding. Where discrimination of warning signals from each other will be critical to personnel safety or system performance, audio signals shall be appropriately coded.

c. Perceptibly different alarms. Alarms that are perceptibly different shall correlate with different conditions requiring critically different user responses (e.g., maintenance, emergency conditions, and health hazards). Such signals shall be sufficiently different to minimize the user's search of visual displays. Harmonically related frequencies shall not be used to code different signals; they may, however, be used within a single signal.

d. Critical signals. Familiar signals with established names or associations shall be selected. The first 0.5 second of an audio signal requiring fast reaction shall be discriminable from the first 0.5 second of any other signal that may occur. Speech shall be used whenever feasible.

e. Action segment. The identifying or action segment of an audio warning signal shall specify the precise emergency or condition requiring action.

f. Differentiation from routine signals. Audio alarms intended to bring the user's attention to a malfunction or failure shall be differentiated from routine signals, such as bells, buzzers, and normal operation noises.

g. Prohibited types of signals. The following types of signals shall not be used as warnings where possible confusion might exist because of the operational environment:

(1) Modulated or interrupted tones that resemble navigation signals or coded radio transmissions.

(2) Steady signals that resemble hisses, static, or sporadic radio signals.

(3) Trains of impulses that resemble electrical interference, whether regularly or irregularly spaced in time.

(4) Simple warbles that may be confused with the type made by two carriers when one is being shifted in frequency (beat-frequency-oscillator effect).

(5) Scrambled speech effects that may be confused with cross modulation signals from adjacent channels.

(6) Signals that resemble random noise, periodic pulses, steady or frequency modulated simple tones, or any other signals generated by standard countermeasure devices (e.g., "bagpipes").

(7) Signals similar to random noise generated by air conditioning or any other equipment.

5.3.1.4.4 Compatibility. Compatibility designs shall meet the following:

a. Existing signals. The meaning of audio warning signals selected for a system shall be consistent with warning signal meanings already established for that function.

b. Existing signal compatibility. Established signals shall be used, provided they are compatible with the acoustic environment and the requirements specified herein for the voice communication system. Standard signals shall not be used to convey new meanings.

5.3.1.4.5 Masking. Audio warning signals shall not interfere with any other critical functions or warning signals, or mask any other critical audio signals. Where a warning signal delivered to a headset might mask another essential audio signal, separate channels may be provided to direct the warning signal to one ear and the other essential audio signal to the other ear. When required by operating conditions, this dichotic presentation may also alternate the two signals from ear to ear.

5.3.1.5 Verbal warning signals.

5.3.1.5.1 Nature of signals. Verbal warning signals shall have two components:

a. An initial alerting (non-speech) signal to attract attention and to designate the general problem.

b. A brief standardized verbal message to identify the specific condition and to suggest appropriate action.

5.3.1.5.2 Intensity. Verbal alarms for critical functions shall be not less than 20 decibels above the speech interference level at the operating position of the intended receiver.

Downloaded from http://www.everyspec.com

5.3.1.5.3 Vocal criteria. The voice shall be distinctive and mature. The messages shall be presented in a formal, impersonal manner.

5.3.1.5.4 Speech processing. Verbal warning signals shall be processed only when necessary to increase or preserve intelligibility, such as by increasing the strength of consonant sounds relative to vowel strength. Where a signal must be relatively intense because of high ambient noise, peak-clipping may be used to protect the listener against auditory overload.

5.3.1.5.5 Message content. Word selection priority shall be intelligibility, descriptiveness, and conciseness, in that order. To provide sufficient context for comprehension, not less than four syllables shall be used unless the resulting message would be inconsistent with standard practice.

5.3.1.5.6 Verbal critical warnings and priorities. Critical warning signals shall be repeated with not more than a 3.0-second pause between messages until the condition is corrected or overridden by the crew. Verbal critical warnings shall be in accordance with the following:

a. A priority system shall be established to ensure that higher criticality messages override the presentation of lesser priority messages.

b. If two or more incidents or malfunctions occur simultaneously, the message having the higher priority shall be given first.

c. The remaining messages shall follow in order of priority.

d. In the event of a complete subsystem failure, the system shall integrate previous messages via electronic gating and report the subsystem rather than the component failure.

5.3.1.5.7 Controls for audio warning devices. When an audio signal is designed to persist as long as it contributes useful information, a shutoff switch, controllable by the user, the sensing mechanism, or both, shall be provided, depending on the operational situation and safety factors. When a manual shutoff is used, a visual indication that the warning has been turned off shall be provided.

a. Automatic reset. Whether an audio warning signal is designed to be terminated automatically, manually, or both, an automatic reset function shall be provided. The automatic reset function shall be controlled by the sensing mechanism which shall recycle the signal system to a specified condition as a function of time or the state of the signaling system so that the warning device can sound again if the condition repeats.

b. Redundant visual warning. All nonverbal aural annunciations shall be accompanied by a visual annunciation which defines the condition. In a cockpit, this may be an illuminated display. In the case of a warning horn on a backing vehicle, the vehicle's backward motion provides adequate redundancy.

c. Volume control. Control movements shall be restricted to prevent reducing the volume to an inaudible level, or increasing it to an unacceptably high level. Volume control shall be in accordance with the following:

(1) Automatic or manual. The volume (loudness) of an audio warning signal shall be designed to be controlled by the user, the sensing mechanism, or both, depending on the operational situation and personnel safety factors.

(2) Audio signal level. When detection of an audio signal is essential (e.g., hand-held mine detectors), the signal level shall be adjustable by the user.

(3) Ganging to mode switches. Volume controls may be ganged to mode switches to provide maximum output during mission phases when intense noise may occur and to provide reduced volume at other times. Ganging shall not be used if intense noise may occur during an emergency in a mission phase when the volume would be decreased below an audible level.

(4) Caution signal controls. Audio caution signals shall be provided with manual reset and volume controls.

d. Duration. The duration of an audio warning signal shall be at least 0.5 second, and may continue until the appropriate response is made.

e. Signal termination. The completion of a corrective action by the user or by other means shall automatically terminate the signal.

Downloaded from http://www.everyspec.com

f. Duration limitations. Signals that persist or increase progressively in level shall not be used for emergency situations if manual shutoff may interfere with the corrective action required.

g. Frequency. The alerting signal shall fall within the range from 250 and 8000 Hertz.

5.3.1.6 Speech-transmission equipment. Speech-transmission equipment shall be in accordance with the following characteristics.

a. Frequency. Microphones and associated system-input devices shall respond optimally to that part of the speech spectrum most essential to intelligibility (i.e., 200 to 6300 Hertz).

b. Low-bandwidth frequency. Where system engineering necessitates speech-transmission bandwidths narrower than 200 to 6300 Hertz, the minimum acceptable frequency range shall be 250 to 4000 Hertz.

c. Dynamic range. The dynamic range of a microphone used with a selected amplifier shall be wide enough to admit variations in signal input of at least 50 decibels.

d. High-pass filtering. In an environment with predominantly low-frequency noise, 300 Hertz cutoff, high-pass filtering shall be used. In very loud, low-frequency noise environments (100 decibels overall), the following shall be applicable:

(1) Use of noise-canceling microphones. Noise canceling microphones shall be used.

(2) Characteristics of noise-canceling microphones. Noise canceling microphones shall be capable of achieving an improvement of not less than 10 decibels peak-speech to root-mean-square noise ratio as compared with non-noise-canceling microphones of equivalent transmission characteristics.

e. Pre-emphasis. If necessary, speech system input devices shall employ frequency pre-emphasis with a positive slope frequency characteristic no greater than 18 decibels per octave from 140 to 1500 Hertz to and no greater than 9 decibels per octave over the frequency range 1500 to 4800 Hertz, when no clipping is used.

f. Peak-clipping of speech signals. Where speech signals are to be transmitted over channels showing less than 15 decibels peak-speech to root-mean-square noise ratios, peak clipping of 12 to 20 decibels may be employed at system input and may be preceded by frequency pre-emphasis as specified in 5.3.1.5.7e.

g. Noise shields. When the talker is in an intense noise field, the microphone shall be put in a noise shield. Noise shields shall meet the following requirements:

(1) A volume of at least 250 cubic centimeters (cm^3) (15.25 cubic inches (in^3)) shall be provided to permit a pressure gradient microphone to function normally.

(2) A good seal shall be provided against the face with the pressure of the hand or the tension of straps.

(3) A hole or combination of holes covering a total area of 65 mm^2 (0.1 in^2) shall be provided in the shield to prevent pressure buildup.

(4) Standing wave patterns shall be prevented by shape, or by use of sound absorbing material.

(5) The shield shall present no impediment to voice effort, mouth, jaw movement, or breathing.

h. Automatic signal level control. Automatic signal level control may be used in situations with a consistent speech-to-noise differential not greater than 20 decibels.

i. Binaural asynchronous delay. Except for 3-D sound localization applications, critical voice communications systems shall not introduce a discernible binaural asynchronous delay (>1 millisecond).

j. Speaker/side tone. The speaker's verbal input shall be in phase with its reproduction as heard on the headset. This side tone shall not be filtered or modified before it is received in the headset. Feedback of the speaker's own voice (side tone) shall be provided via the earphones.

5.3.1.6.1 Speech reception equipment. Speech reception equipment shall meet the following:

a. Frequency range. Headphones and loudspeakers shall be subject to the same frequency response restrictions as microphones and transmission equipment except as described herein. Loudspeakers used in multi-speaker installations and headphones receiving feeds from multiple channels (e.g., where several speech channels are to be monitored simultaneously) shall respond uniformly (±5.0 decibels) from 100 to 4800 Hertz.

Downloaded from http://www.everyspec.com

b. Loudspeakers for multi-channel monitoring. If several channels are to be monitored simultaneously by means of loudspeakers, the speakers shall be mounted at least 10 degrees apart in the horizontal plane frontal quadrant, from 45 degrees left to 45 degrees right of the user's normal forward facing position. Filtering shall be in accordance with the following:

(1) When additional channel differentiation is required, apparent lateral separation shall be enhanced by applying low-pass filtering (frequency cutoff = 1800 Hertz) to signals fed to loudspeakers on one side of the central user position.

(2) If three channels are involved, the following conditions shall apply:

(a) One channel shall be left unfiltered.

(b) A high-pass filter with 1000 Hertz cutoff shall be provided in the second channel.

(c) A low-pass filter with 2500 Hertz cutoff shall be provided in the third channel.

(d) A visual signal shall be provided to show which channel is in use.

c. Use of de-emphasis. When transmission equipment employs pre-emphasis, and peak clipping is not used, reception equipment shall employ frequency de-emphasis of characteristics complementary to those of pre-emphasis only if it improves intelligibility, i.e., de-emphasis shall be a negative-slope frequency response not greater than 9 decibels per octave over the frequency range 140 to 4800 Hertz.

d. Headsets. If listeners will work in high ambient noise (85 dBA or above), binaural rather than monaural headsets shall be provided. Binaural headsets shall be in accordance with the following:

(1) Wiring. Unless operational requirements dictate otherwise, binaural headsets shall be wired so that the sound reaches the two ears in opposing phases.

(2) Attenuation. The attenuation qualities of binaural headsets shall be capable of reducing the ambient noise level to less than 85 dBA.

(3) Provision for eyeglasses wearers. Provisions shall be incorporated to furnish the same protection, regardless of whether or not users wear glasses.

e. Earphone/speaker-to-microphone feedback isolation. Sufficient electrical, mechanical, and acoustical isolation shall be provided to preclude feedback oscillations (squeal problems) or echo effects (no discernible unwanted voice echo to speaker).

f. Public address systems. The location, number, and loudness of speakers shall provide intelligible signals/messages to all personnel. Speaker range in reverberant spaces shall be not greater than 15 meters (50 feet) to avoid excessive echoing (also see 5.5.4.6.3). Speaker amplitude shall not mask audio warnings.

5.3.1.6.2 User comfort and convenience. User comfort and convenience shall meet the following:

a. Comfort. Communication equipment to be worn by a user (e.g., headphones and telephone headsets) shall be designed to prevent metal or any other rigid parts of headset from coming in contact with user's skin. Communication equipment shall preclude user discomfort. Materials selected shall be impervious to biological organisms such as molds and fungi and shall not deteriorate from humidity or perspiration within thermal environments specified by the procuring activity

b. Hands-free operation. User microphones, headphones, and telephone headsets shall be designed to permit hands-free operation under normal working conditions.

c. Accessibility of handsets. Where communication requirements necessitate the use of several telephone handsets, the accessibility of their standby locations shall be determined by operational priority, i.e., the most frequently or urgently needed handset shall be the most accessible. The handsets may also be color coded if they will be visible to operating personnel under the working conditions.

d. Operating controls for voice communication equipment. For situations in which users using microphones or headsets also have both hands occupied most of the time, consideration shall be given to providing hands-free operation of microphone and headset switching through use of foot switches, voice-actuated switches, or remotely controlled switches as appropriate to the circuits in use. If there may be any requirement to operate the microphone or headset switching from a standing position, then hand-operated switches shall also be provided.

e. Volume controls. Volume controls shall be in accordance with the following:

Downloaded from http://www.everyspec.com

(1) Accessible controls. Accessible volume or gain controls shall be provided for each communication receiving channel (e.g., loudspeakers or headphones).

(2) Provision of controls power. Volume or gain controls shall be provided with sufficient electrical power to drive sound pressure level to at least 100 decibels overall when using two earphones.

(3) Controls switch compensation for unpressurized compartments. Volume or gain controls shall have pressure operated gain control switches to compensate for altitude in unpressurized compartments.

(4) Minimum setting of volume controls. The minimum setting of the volume control shall be limited to an audible level, i.e., it shall not be possible to inadvertently disable the system with the volume control.

(5) Power controls. When power (ON/OFF) and volume adjustment are combined into the same control, a noticeable detent position shall be provided between the clearly labeled OFF position and the lower end of the continuous range of volume adjustment.

f. Squelch control. Where communication channels are to be continuously monitored, each channel shall be provided with a signal-activated switching device (squelch control) to suppress channel noise during no-signal periods. A manually operated ON/OFF switch shall be provided to deactivate the squelch when receiving weak signals.

g. Foot-operated controls. When normal working conditions will permit the user to remain seated at the working position and require access to "talk-listen" or "send-receive" control switches, or if console operation requires the use of both hands, foot-operated controls shall be provided. Hand-operated controls for the same functions shall be provided for emergency use and for use when the user may need to move from one position to another.

5.3.1.7 Audio displays as part of the user interface. Audio displays may be used as part of the user-computer interface, where (a) the common mode of visual display is restricted by overburdening or user mobility needs and it is desirable to cue, alert, or warn the user, or (b) the user shall be provided feedback after control actuation, data entry, or completion of timing cycles and sequences. For other requirements, see 5.3.1.1 and 5.3.1.2. For frequency, see 5.3.1.3.3. For audibility of audio displays, see 5.3.1.4.1.

a. Supportive function. Audio signals used in conjunction with visual displays shall be supplementary to the visual signals. Audio signals shall be used to alert and direct the user's attention to the appropriate visual display.

b. Signal characteristics. Signals may be one-time or intermittent. Intermittent signals shall be automatically terminated when no longer applicable, or by user control.

c. Alarm settings. When alarm signals are established on the basis of user-defined logic, users shall be permitted to obtain status information concerning current alarm settings, in terms of dimensions (variables) covered and values (categories) established as critical. Alarm status information shall be provided in monitoring situations where responsibility may be shifted from one user to another, as in changes of shift.

5.3.1.7.1 3-D audio displays. 3-D audio displays shall meet the following:

a. Use. 3-D audio displays or multiple voice communications may be used in an environment with numerous and important spatial cues or where an user is likely to be highly tasked visually (e.g., fighter cockpits) to enhance situation awareness, segregate multiple channels, or rapidly redirect the user's vision.

b. Presentation format. For most applications, 3-D audio displays shall present data as discrete sound sources located at a constant distance at various azimuths and elevations.

c. Angular separation. Angular separation between discrete sounds shall be not less than 15 degrees in the horizontal plane and not less than 30 degrees in the vertical plane.

d. Binaural versus monaural. 3-D audio cues shall be presented binaurally.

5.3.1.8 Speech displays. Speech displays shall meet the following:

a. When voice communication shall be used. Voice communication shall be considered for the following situations:

(1) The message content or format cannot be predicted in advance.

(2) Speech displays may be used where mobility is necessary or where the user's eyes are busy.

Downloaded from http://www.everyspec.com

(3) Extensive or rapid interaction between users will be required as where there must be joint solution of a war problem, or where it is necessary to "break into" concurrent information transmission.

(4) The voice signal itself offers assurance of essential psychological support not otherwise available.

(5) Users cannot conveniently look at a visual display to obtain information.

(6) Speech displays will be used in a "hands-busy" situation.

(7) Speech displays will announce discrete events.

b. When voice communication shall not be used. Voice communication shall not be used in the following situations:

(1) For continuous status information.

(2) If display use frequency is high.

(3) If simultaneous display of multiple messages is required.

(4) If messages are long.

(5) If messages include information that must be memorized.

(6) If messages include a series of instructions that must be remembered.

c. Output rate. All speech displays shall provide an output rate between 150 and 180 words per minute.

d. Digitized speech. Digitized speech shall be used in preference to synthesized speech.

e. Message priority control. Where simultaneous messages could occur, they shall be prioritized so that the initial presentation of the most critical message receives transmission priority and overrides lower priority messages.

f. Instructional display structure. Instructional prompt messages shall be structured with the desired goal first, followed by the desired action (e.g., "to delete, press enter" rather than "press enter to delete"). Prompts shall be repeated following a user command or 10 seconds of inactivity. If the user is required to take an action, a revised version of this message prompt shall be displayed that indicates to the user that the system is waiting for their response and gives users additional instructions on how to respond (if applicable).

g. Message cancel capability. A manual cancellation capability shall be provided for all speech displays after the initial presentation.

h. Repeat capability. User-commanded message repetition shall be provided.

5.3.1.8.1 Speech intelligibility. Speech intelligibility shall meet the following:

a. General. When information concerning the speech intelligibility of a system is required, two recommended methods are available, with the appropriate selection being dependent upon the requirements of the test.

(1) Modified rhyme test (MRT). The MRT described in ANSI 3.2 shall be used to measure the communication performance of most military communication systems.

(2) Articulation index (AI). The AI or the speech transmission index (STI) shall be used as predictive estimators of intelligibility.

b. Criteria. The intelligibility criteria shown in table XX shall be used for voice communication. The efficiency of communications needed and the type of material to be transmitted shall determine which of the three communication requirements of table XX is to be selected.

Downloaded from http://www.everyspec.com

TABLE XX. Intelligibility criteria for voice communication systems.

Communication requirement	Score	
	MRT	AI [1/]
Exceptionally high intelligibility	97%	0.7
Normal acceptable intelligibility	91%	0.5
Minimally acceptable intelligibility for mechanized equipment user(s)	80%	0.4
Minimally acceptable intelligibility	75%	0.3

NOTE:
[1/] The Articulation Index (AI) shall not be used to measure intelligibility of synthetic speech because some key acoustic features are not present in non-human "speech". Instead, intelligibility of synthetic speech shall be measured using representative panels of talkers and listeners (see MRT).

5.3.1.8.2 Communications. Communications shall meet the following:

a. General.

(1) Masking of speech by noise. Most of the energy required for near-perfect speech intelligibility shall be in the range of 200 to 6300 Hertz. This range may be narrowed to 250 to 4000 Hertz without significant loss in intelligibility. Consonants contain energy mainly at frequencies above 1500 Hertz, whereas vowels contain lower-frequency energy. Unfortunately, the consonants, which convey most of the information in English speech, contain very little energy. Thus, they are more subject to interference (masking) from noise than are vowels. Vowels contain more energy but transmit less information. Since masking of the audio signal is mainly the result of low frequency noise, the use of active noise reduction (ANR) shall be used to phase cancel low frequency noise. This is especially important in extremely noisy background environments when passive attenuation is normally used to reduce background noise.

(2) Power. The communication system shall be capable of power output at least 15 dB higher in sound intesity than the anticipated ambient noise. The user shall have a gain control for adjusting the output level.

(3) Sound pressure level. Output sound pressure level shall not exceed 115 decibels peak voice level at the ear, but where appropriate, average level may be increased by using compression or automatic volume control.

(4) Audible signals. When two or more items of communication equipment with audible signals (telephone, radio, and intercom) are in the same area, each shall have a distinct signal. If distinct signals are not possible, 3-D audio technology shall be used.

b. Receiver and headset. The receiver and headset shall have a frequency response of +3.0 decibels between 250 and 6000 Hertz to maximize intelligibility.

(1) Warning signals. Auditory warning signals shall be presented through the user's headset, as well as to the work area, when ambient noise level will exceed 85 dBA or when the user will ordinarily wear earphones covering both ears during normal equipment operation.

(2) Headsets. If listeners wear headsets while working in high ambient noise (85 dBA or above), headsets shall cover both ears, and their attenuation qualities shall be capable of reducing the ambient noise level to less than 85 dBA. Headsets shall not block outside critical alarms. Microphones on headsets used in high ambient noise conditions shall support noise reduction. Push-to-talk shall also be used where appropriate to minimize time on air with high ambient noise interference. Headset jacks or connectors shall be placed so the headset cord will not obstruct the work area or interfere with the user's normal functions.

c. Radio sets. Radio sets shall be in accordance with the following:

Downloaded from http://www.everyspec.com

(1) Location. The radio set shall be located where normal system operations and crew activities are not likely to damage it. Such locations shall also minimize interference with the crew's normal range of movement and eliminate hazards to them. Radio control panels shall be readily visible and accessible to users. The user shall also be able to reach control panel(s) to change frequency without having to open doors or remove covers. When protective devices such as fuses and circuit breakers are located inside the equipment, there shall be a visible status indicator where the user can see it. The user shall be able to manipulate and utilize all controls while wearing gloves (if required for operational use).

(2) Safety. All external metal parts which users ordinarily touch shall be at ground potential. There shall be a provision for discharging high-voltage circuits and capacitors to 30 volts within 2.0 seconds before maintenance personnel work on them. In addition, if components in a high-voltage circuit have exposed terminals, they shall be protected so that operating and maintenance personnel cannot short circuit, ground, or contact them accidentally.

d. Radio antenna. Locations for radio antennas shall be selected to minimize the possibility of radio frequency hazards to personnel. Antennas and waveguides shall be at ground potential except for the radio frequency energy meant to be radiated.

e. Control box. Control boxes shall be located in an area that provides users easy access to controls. The control boxes shall not interfere with the user's normal movements or present any hazard to them. The boxes shall not be placed where they are likely to be used as footrests or steps. Any cables connected to headsets or microphones shall be clear of rotating or moving linkages. Boxes shall be within easy reach of standard connecting cables (760 millimeters (30 inches)) from the crewman's nominal working area. If warning lights are mounted on the control box, they shall be located within the responsible crewman's field of vision.

f. Audio accessories. Stowage mechanisms (e.g., hooks, velcro straps) shall be provided in each crewmember's normal working area for storing audio accessories such as microphones, headsets, handsets, and cords when not in use. Stowage mechanisms shall be located where they will neither obstruct the user's normal movements nor be likely to cause injury when equipment is removed from stowed positions.

g. Cable routing. All interconnecting cables shall be routed neatly (clamped at approximately 300-millimeter (12-inch) intervals) to eliminate droop and unnecessary loops so that personnel are not apt to use them as handholds or steps. If neat routing is not feasible, cables shall be covered by protective guards.

5.3.2 Speech recognition.

5.3.2.1 Use. Speech recognition devices may be used as controls when the user's hands are occupied, when regular or frequent mobility is required, or when the user's visual attention is fully occupied. Speech recognition devices are used when:

a. The consequences of recognition errors are low.

b. Identifying and correcting errors would be easy.

c. Use is expected to be infrequent.

d. The device can be readily inhibited when speech recognition is not desired.

5.3.2.2 Nonuse. Speech recognition devices shall not be used for tasks that involve describing the position or manipulation of objects. Speech recognition devices shall be used only where satisfactory performance can be obtained. This may preclude environments that produce stress in the user, are noisy, or have high G-loading.

5.3.2.3 General. Speech recognition devices shall adapt to the user, not vice versa. Speech recognition devices shall require minimal training. Speech recognition devices shall provide feedback to the user so the user knows the system has understood them.

5.3.2.4 Input vocabulary. Input vocabulary shall be minimized, consistent with system needs, and selected to provide phonetically distinct elements to eliminate misinterpretation.

5.3.2.5 Interword delays. Speech recognition devices shall not require interword delays or exaggeration in speech.

5.3.2.6 Prompting. Voice prompting from the computer shall be provided where there is an advantage to freeing the user from reading a display. Lack of user response to the prompt shall result in a repetition of the prompt.

Downloaded from http://www.everyspec.com

5.3.2.7 Correction capability. A capability shall be provided to reject unintended and involuntary sounds such as sneezes, coughs, throat clearing, or non-command words.

5.3.3 Alternative input device. Speech recognition devices shall not be used as the sole control device. An alternative control device shall be provided in case of speech recognition device degradation or failure.

5.4 Labeling. While the focus of this section is labels that appear on controls, instruments, gauges, consoles, panels, equipment, signs, and placards, it is possible that some of the requirements and design criteria herein will also apply to labels on electronic displays. The reader is cautioned to ensure the appropriateness of the requirements and design criteria herein to labels on electronic displays before application.

5.4.1 General. Any marking used to identify items such as, but not limited to, labels, legends, signs, and placards, shall follow the guidance in this section. Warning labels are covered separately by 5.7.2.1.

5.4.1.1 Use of labels. Labels, legends, placards, signs, markings, or a combination of these shall be provided whenever personnel must identify items (except where it is obvious to observers what an item is and what they are to do with it), interpret or follow procedures, or avoid hazards.

5.4.1.2 Label characteristics. Label characteristics shall be consistent with required accuracy of identification, time available for recognition or other responses, distance at which the labels must be read, illuminant level and color, criticality of the function labeled, and label design practices within and between systems.

5.4.2 Orientation. Labels and information thereon (i.e., words and symbols) shall be oriented horizontally to read from left to right. Vertical orientation, reading from top to bottom, may be used only when labels are not critical for personnel safety or performance and where space is limited. Where vertical orientation is necessary, the characters shall be readable in an upright orientation as depicted on figure 31. Sideways text and text read from bottom to top are unacceptable.

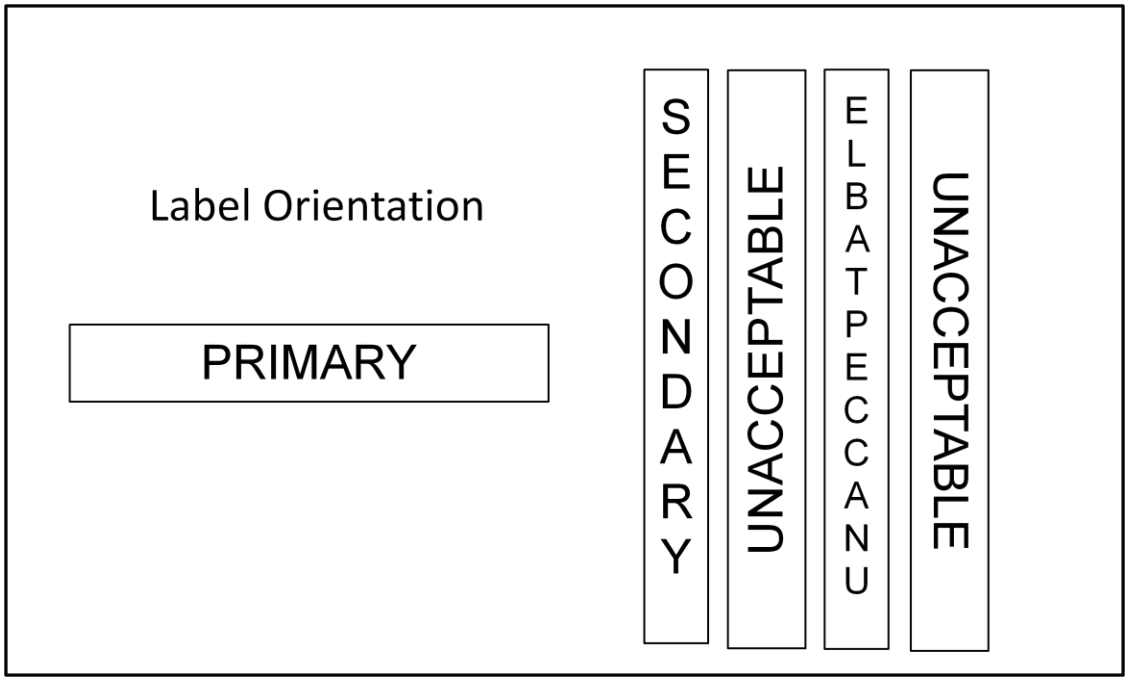

FIGURE 31. Orientation of labels.

5.4.3 Location.

Downloaded from http://www.everyspec.com

5.4.3.1 Proximity. Labels shall be placed on or very near the items which they identify to eliminate confusion with other items and labels.

5.4.3.2 Obscuration. Labels shall not be located where a control or an user's normal hand, arm position, portable repair equipment, or any other item will obscure the label or where the label obscures any other information.

5.4.3.3 Moveable controls. Labels shall not be placed on movable controls that allow the label to rotate to an upside-down position.

5.4.3.4 Adjacent label. Adjacent labels shall be sufficiently separated so as to not be read as one continuous label.

5.4.3.5 Placement.

5.4.3.5.1 Viewing. Labels shall not be placed near the floor or other positions that preclude the observer from easily viewing the label from work posture appropriate to the equipment.

5.4.3.5.2 At or below eye level. When controls are placed at or below eye level, the corresponding label shall be placed above the controls or display that they describe.

5.4.3.5.3 Above eye level. When controls are placed above eye level, the corresponding label shall be placed below the controls or display that they describe.

5.4.3.6 Redundant labeling. Redundant labeling shall be used for installations such as pipes that take several runs and can be viewed from several planes or motors that can be viewed from two sides.

5.4.3.7 Standardization. Labels shall be located consistently throughout the system.

5.4.3.8 Overhead items. Items that are located overhead and out of view shall be identified with labels on walls with an arrow pointing in the direction of the item or by a label on the floor directly below the item.

5.4.4 Contents.

5.4.4.1 Equipment functions. Labels shall primarily describe the functions of equipment items. Engineering characteristics or nomenclature may be described as a secondary consideration.

5.4.4.2 Abbreviations. Abbreviations shall conform to applicable standards. If a new abbreviation is required, its meaning shall be obvious to the target user. Periods shall be omitted except when needed to preclude misinterpretation. The same abbreviation shall be used for all tenses and for singular and plural forms of a word.

5.4.4.3 Irrelevant information. Trade names and other irrelevant information shall not appear on labels.

5.4.5 Readability qualities.

5.4.5.1 Brevity. Labels shall be unambiguous and as concise as possible without distorting the intended meaning or information. Short, direct sentences in active voice shall be used and redundancy shall be minimized.

5.4.5.2 Familiarity. Words shall be familiar to the target user.

5.4.5.2.1 Considerations. For specific users (e.g., maintainers), common technical terms may be used even though they may be unfamiliar to non-users. Abstract symbols (e.g., squares and Greek letters) shall be used only when they have an accepted meaning to all intended readers. Common, meaningful symbols (e.g., % and +) may be used.

5.4.5.2.2 Special markings and symbols. Special markings and symbols (pictorials and arrows) shall be considered when they unambiguously convey meaning in a more direct manner than words.

5.4.5.3 Comprehension. Extended instructional or procedural information for placards and signs shall be concise but understandable to the intended user. Placards and signs shall be in accordance with the following:

a. Omit words that are unnecessary to convey the meaning of the message.

Downloaded from http://www.everyspec.com

b. Place each procedural step on a separate line and include numbers, dots, or other techniques to emphasize the beginning of each step.

c. Use acronyms sparingly and only when they are familiar to the intended user.

d. Avoid use of instructions that require reference to another, perhaps unavailable, resource.

5.4.5.4 Consistency. When function and application are identical, words or abbreviations used shall be identical. Conversely, the same words shall not be used to identify two or more controls or displays when these are not functionally identical.

5.4.5.5 Visibility and legibility.

5.4.5.5.1 Accurate reading. Labels shall be easy to read accurately from the operational reading distances and in the anticipated vibration, motion, and illumination environments.

5.4.5.5.2 Considerations. The following factors shall be taken into consideration:

a. Contrast between the lettering and its immediate background.

b. Height, width, stroke width, spacing, and style of letters and numerals, and size of detail for other abstract or pictorial symbols.

c. Method of application (etching, engraving, decal, silk screen).

d. Relative legibility of alternate words that might be used to convey the same meaning.

e. Specular reflection.

5.4.5.6 Access. Labels shall be placed on the outside of equipment covers to identify control, display, or other functions located within a covered compartment.

5.4.5.7 Cables. Labels attached to lines or cables for the purpose of identification shall be positioned so the label is visible and properly oriented with respect to the nominal viewing position of the field technician rather than the factory assembler. Both ends of a cable or line shall be labeled. Cable connection elements shall contain appropriate, matching labels.

5.4.5.8 Label mounting.

5.4.5.8.1 Attachment. Labels that are not part of the equipment or unit shall be securely attached to prevent their loss, damage, slippage, or accidental or unauthorized removal.

5.4.5.8.2 Non-removable. Labels shall be attached to a structural member that is not removed during equipment servicing or routine maintenance.

5.4.5.8.3 Wear and dirt. Labels shall be mounted so as to minimize wear or obscuration by grease, grime, or dirt. Labels shall remain legible for the overhaul interval of the labeled equipment.

5.4.5.8.4 Mounting alternatives. An alternative to mounting a label is etching directly on the equipment.

5.4.5.9 Label surface. Whenever practicable, labels shall be placed on a flat surface. Curved labels (e.g., a label that is wrapped around a pipe or cable) shall be avoided.

5.4.5.9.1 Maintaining visibility. If a label must be placed on a curved surface, lettering or symbols shall be completely visible to an observer from the nominal vantage point.

5.4.5.9.2 Dual labeling. When the curvature of the surface is such that the lettering becomes too small to be read, another mode of labeling, such as an attached tag, shall be used.

5.4.5.10 Label contrast. Label color shall contrast with the equipment background.

5.4.5.11 Label background. Unless approved by the procuring activity, labels that include their own independent background shall provide sufficient contrast between lettering and immediate background. Shiny metallic backgrounds shall not be used for labels.

Downloaded from http://www.everyspec.com

5.4.6 Design of label characters.

5.4.6.1 Black characters. Where the ambient illuminance will be above 10 lux (0.9 footcandle), black characters shall be provided on a light background.

5.4.6.2 Dark adaptation. Where dark adaptation is required, the displayed letters or numerals shall be visible without impairing night vision (e.g., white on a dark background).

5.4.6.3 Character font and style.

5.4.6.3.1 Style of characters. Style of label characters shall be in accordance with SAE-AS18012, where consistent with 5.4.6.3.3, 5.4.6.3.4, 5.4.6.3.6, and 5.4.6.3.7 herein.

5.4.6.3.2 Plain style. Letters and numerals shall be of a plain style without serifs (i.e., sans serif fonts) except as may be necessary to distinguish between characters which would otherwise be confused (e.g., “L”, “I”, “1”, “0”, “O”).

5.4.6.3.3 Capital versus lower case. Capital letters shall be used for abbreviations. All capital letters shall be used for identification labels, headings and subheadings, signal words such as danger, caution, attention, notice, legends, and short message labels. Capital and lowercase letters shall be used for extended sentence messages, such as multi-sentence signs and instructional placards, or when it is necessary to use punctuation.

5.4.6.3.4 Letter width. Alphanumeric characters shall have a width of 0.6 to 0.8 of the height except for single stroke characters (e.g., I, 1) which shall be between 0.1 and 0.2 of the height.

5.4.6.3.5 Numeral width. The width of numerals shall preferably be 0.6 of the height, except for “4”, which shall be 0.8 of the height, and “1” which shall be 0.2 of the height.

5.4.6.3.6 Wide characters. Where wide characters are required, for items such as curved surfaces, or for column alignment of numbers, the basic height-to-width ratio may be increased to as much as 1:1.

5.4.6.3.7 Stroke width. Stroke width shall meet the following:

a. Normal. For black characters on a white (or light) background, the stroke width shall be 0.1667 to 0.1429 of the height. The stroke width shall be the same for all letters and numerals of equal height.

b. Dark adaptation. Where dark adaptation is required or legibility at night is a critical factor, and white characters are specified on a dark background, the stroke width of the characters shall be from 0.1429 to 0.125 of the height. The stroke width shall be the same for all letters and numerals of equal height.

c. Transilluminated characters. For transilluminated characters, the stroke width shall be 0.1 of the height.

d. Maintain ratio. The stroke width ratios shall apply regardless of how high characters are made for distance viewing. However, for certain applications, characters with different stroke widths may be used on the same sign for emphasis. In this case, the thinnest character stroke shall be no less than 0.125 nor the thickest character stroke greater than 0.2 of the respective character heights.

5.4.6.3.8 Stroke continuity. Continuous stroke characters shall be used where applicable and practical for all equipment labels, legends, placards, and signs. Stencil characters may be used for shipping containers. Stencil characters shall not have stroke breaks greater than 0.5 the character stroke width.

5.4.6.3.9 Character spacing. The minimum space between characters shall be one stroke width.

5.4.6.3.10 Word spacing. The minimum space between words shall be not less than the width of one character (except for “I” or “1”).

5.4.6.3.11 Line spacing. The minimum space between lines shall be one-half character height (e.g., line spacing in points equals ½ font size in points).

5.4.6.3.12 Character height versus luminance. The height of letters and numerals shall conform to table XXI.

Downloaded from http://www.everyspec.com

TABLE XXI. Character height versus luminance and viewing distance.

Markings	Height [1/]	
	Low lighting, 3.5 cd/m^2 (1 fL) or below	**Normal lighting, above 3.5 cd/m^2 (1 fL)**
Critical markings with position variable (e.g., numerals on counters)	5.0 – 8.0 mm (0.20 – 0.31 in)	3.0 – 5.0 mm (0.12 – 0.20 in)
Critical markings with position fixed (e.g., numerals on fixed scales, controls and switch markings, or emergency instructions)	4.0 – 8.0 mm (0.16 – 0.31 in)	2.5 – 5.0 mm (0.10 – 0.20 in)
Noncritical markings (e.g., identification labels, routine instructions, or markings required only for familiarization)	2.5 – 5.0 mm (0.10 – 0.20 in)	2.5 – 5.0 mm (0.10 – 0.20 in)

NOTE:
[1/] Values assume a 710 mm (28 in) viewing distance (D). For other distances, multiply the above values by D/710 mm (D/28 in).

5.4.6.3.13 Character height versus viewing distance. Character height shall conform to the values in table XXI.

5.4.6.4 Pictorials and symbols.

5.4.6.4.1 Faster user response time. Pictorial symbols may be used in place of word labels or in addition to a word label when the pictorial provides faster user response.

5.4.6.4.2 Avoiding ambiguity. Pictorial symbols shall be completely unambiguous in the expected visual operating environments.

5.4.6.4.3 Rotating controls. Pictorial symbols shall not be used on a control that may rotate and thus position the symbol so that it may be confusing.

5.4.6.4.4 Vehicle symbols. See 5.6.4.6.

5.4.6.5 Borders. There shall be sufficient clear space between characters and words used for labeling or signing to prevent the label from appearing crowded or difficult to read. The minimum clearance around a character or word and the border shall be 0.5 character height or more. Clearance around a character, or word, or set of words shall not make the label appear “lost” within a large expanse of background.

5.4.6.6 Use of color. If color-coding is used, the number of different colors shall not exceed nine. If color-coding is used, the colors shall be distinguishable by both color-normal and color-deficient persons.

5.4.7 Equipment labeling.

5.4.7.1 Units, assemblies, subassemblies, and parts.

5.4.7.1.1 General requirements. Each unit, assembly, subassembly, and part shall be labeled with a clearly visible, legible, and meaningful name, number, code, mark, or symbol, as applicable.

5.4.7.1.2 Location. The gross identifying label on a unit, assembly, or major subassembly shall be located externally in such a position that it is not obscured by adjacent items; on the flattest, most uncluttered surface available; or on a main chassis of the equipment.

5.4.7.1.3 Terms. Equipment shall be labeled with terms descriptive of the test or measurement applicable to their test points (e.g., “demodulator” rather than “crystal detector” or “power amplifier” rather than “bootstrap amplifier”).

Downloaded from http://www.everyspec.com

5.4.7.1.4 Panels. If the panel must be identified from others, each panel within a given equipment or console shall be labeled. When a given panel integrates a specific operating function distinct from another panel, a general system or subsystem identification label shall be provided.

5.4.7.1.5 Subfunctions. When subfunction areas on a single panel must be easily and quickly differentiated from other areas on the panel, the subfunction area shall have a label approximately centered above the subfunction area. When the shape of the components within the subfunction area is not uniform, consideration shall be given to surrounding the area with a suitable border to define the limits of the subfunction area.

5.4.7.1.6 Cabinets. When several equipment cabinets are located in a single work area, each cabinet shall be labeled to aid the users and other personnel in quickly identifying what is located in each equipment cabinet. Cabinets shall be labeled in accordance with the following:

a. Conspicuity. Cabinet identification labels shall be located in a conspicuous position considering the typical observation points from which each piece of equipment must be identifiable.

b. Consistency. Primary cabinet labels shall be located in as consistent a manner as practicable so that target users do not have to hunt for the label.

c. Storage cabinets. Storage cabinets shall be labeled in accordance with the following:

(1) The contents of storage cabinets shall be labeled on the outside of the cabinet door.

(2) For large storage cabinets, labels shall be placed at standing eye height, i.e., between 127 to 165 centimeters (50 to 65 inches) above the standing surface.

(3) A prominent redundant label that identifies the contents of the cabinet shall be visible when the door is open.

d. Text size. The size of the material on each label shall be consistent with viewing distance criteria (see table XXI).

e. Cabinet, panel, subfunction, and component label differentiation. Cabinet, panel, subfunction, and component label differentiation shall be in accordance with the following:

(1) Label size differentiation. Labels for identifying a prime equipment cabinet versus panels, subfunctions on a panel, and individual panel components shall be capable of being differentiated in terms of the label size (letter height).

(2) Progression by priority. The size encoding shall progress according to the priority listing indicated below:

(a) Largest label size for the prime equipment.

(b) Second largest label for individual panels.

(c) Third largest label for subpanel.

(d) Fourth largest for function label within a panel.

(e) Smallest label for individual components, such as displays or controls.

(3) Compatibility with viewing distance. Label sizes shall be compatible with expected viewing distances.

(4) Character height. To provide discriminable differences among label sizes, each label character height shall be at least 25 percent less than, or greater than, the next function label (see figure 32).

Downloaded from http://www.everyspec.com

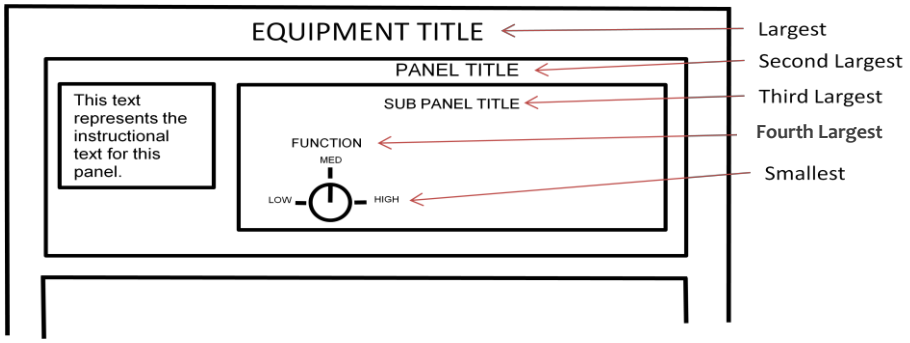

FIGURE 32. Label-size hierarchy.

5.4.7.2 Controls and displays.

5.4.7.2.1 General requirements. Controls and displays shall be appropriately and clearly labeled with the basic information needed for proper identification, utilization, actuation, or manipulation of the element.

5.4.7.2.2 Simplicity. Control and display labels shall convey verbal meaning in the most direct manner (e.g., using simple words and direct phrases).

5.4.7.2.3 Functional labeling. Each control and display shall be labeled according to function. Functional labeling shall be in accordance with the following:

a. Naming. Similar names for different controls and displays shall be avoided.

b. Control labeling. Control labeling shall indicate the functional result of control movement (e.g., increase, ON, OFF) and may include calibration data where applicable. Such information shall be visible during normal operation of the control.

c. Functional relationship. When controls and displays must be used together to make adjustments, appropriate labels shall indicate their functional relationship.

d. Terminology. Terminology shall be consistent.

5.4.7.2.4 Hierarchical labeling. Hierarchical labeling shall meet the following:

a. A hierarchical labeling scheme shall be used on control and display panels to reduce confusion and search time.

b. Major labels shall be used to identify major systems or user work stations.

c. Component labels shall identify each panel or console element.

d. Labels shall not repeat information contained in higher-level labels.

5.4.7.2.5 Size graduation. Labels shall be graduated in size to reduce confusion and user search time. The characters in group labels shall be larger than those used to identify individual controls and displays. The characters identifying controls and displays shall be larger than the characters identifying control positions. The dimensions of each character shall be at least approximately 25 percent larger than those of the next smaller label, with the smallest characters determined by viewing conditions.

5.4.8 Labeling for identification.

5.4.8.1 Assemblies. Assemblies shall be labeled with clearly visible, readable, and meaningful names or signs.

5.4.8.2 Characteristics. Assembly labels shall specify the overall system of which the assembly is a part. Assembly labels shall include the popular name and function of the assembly. Assembly labels shall include a stock number for requisition purposes.

Downloaded from http://www.everyspec.com

5.4.8.3 Instruction plate. Instructions shall be as brief as clarity allows and placed where the user can see them easily. Instructions shall read from left to right and listed in a step-by-step format rather than in a continuous paragraph. Diagrams shall contain only the information the user needs and shall be oriented to relate directly to the objects to which they pertain. Diagrams shall be located in conspicuous places on or near controls.

5.4.8.4 Lift points. Lift and hoist points shall be clearly marked indicating weight and stress limitations. Lift or hoist joints shall be labeled at the point of lift, not on removable parts of the body member that may be separated from the lift point.

5.4.8.5 Caution and warning labels for safety and hazards. Wherever possible, equipment shall be designed so it does not present hazards to personnel or equipment. If hazards are unavoidable, warning signs or labels shall be displayed prominently. See 5.7 for design of these labels.

5.5 Environment.

5.5.1 Environmental range. To maximize the effectiveness of the designed system, the designer shall accommodate the full range of environmental extremes to which the system will be subjected and meet all specified performance over that range.

5.5.1.1 Specification of environmental conditions. All environmental conditions and extremes and their impact upon human performance and design shall be specified in the design documentation.

5.5.1.2 Variation of performance standards across environmental conditions. Where performance standards vary over the range of environmental conditions and extremes, the system shall meet performance standards for each environmental condition.

5.5.1.3 Sustained operations across all environmental conditions. Military materiel shall be capable of sustained operations within the climatic extremes specified in the materiel requirements documents or system specification.

5.5.1.4 Mitigation of adverse effects of environmental conditions. When deviations from the stated tolerable conditions are necessary, consequences shall be mitigated in design to prevent adverse effects.

5.5.1.5 Government approval of mitigating actions. Mitigating actions taken to prevent adverse effects of environmental conditions shall be approved by the cognizant Government technical authority.

5.5.2 General workplace considerations.

5.5.2.1 Heating, ventilating, and air conditioning.

5.5.2.1.1 General. Indoor climate requirements shall be provided for “manned spaces”. A space is considered “manned” if it is occupied continuously for more than 20 minutes. Each manned space shall have its own individual thermostat for temperature regulation and dehumidification purposes.

5.5.2.1.2 Heating. Within work environments used for detail work or occupied during extended periods of time (including, but not limited to mobile personnel enclosures), heating shall be provided to maintain interior dry bulb temperature above 10 °C (50 °F).

a. Minimum effective temperature for manned spaces. Within permanent, semi-permanent facilities, and ships, provisions shall be made to maintain an effective temperature (ET) or corrected effective temperature (CET) not less than 18 °C (65 °F) (see figure 33), unless dictated otherwise by workload or extremely heavy clothing. For vehicle heating provisions, see 5.6.6.

b. Heated air discharge. Heating systems shall be designed such that hot air discharge is not directed on personnel.

Downloaded from http://www.everyspec.com

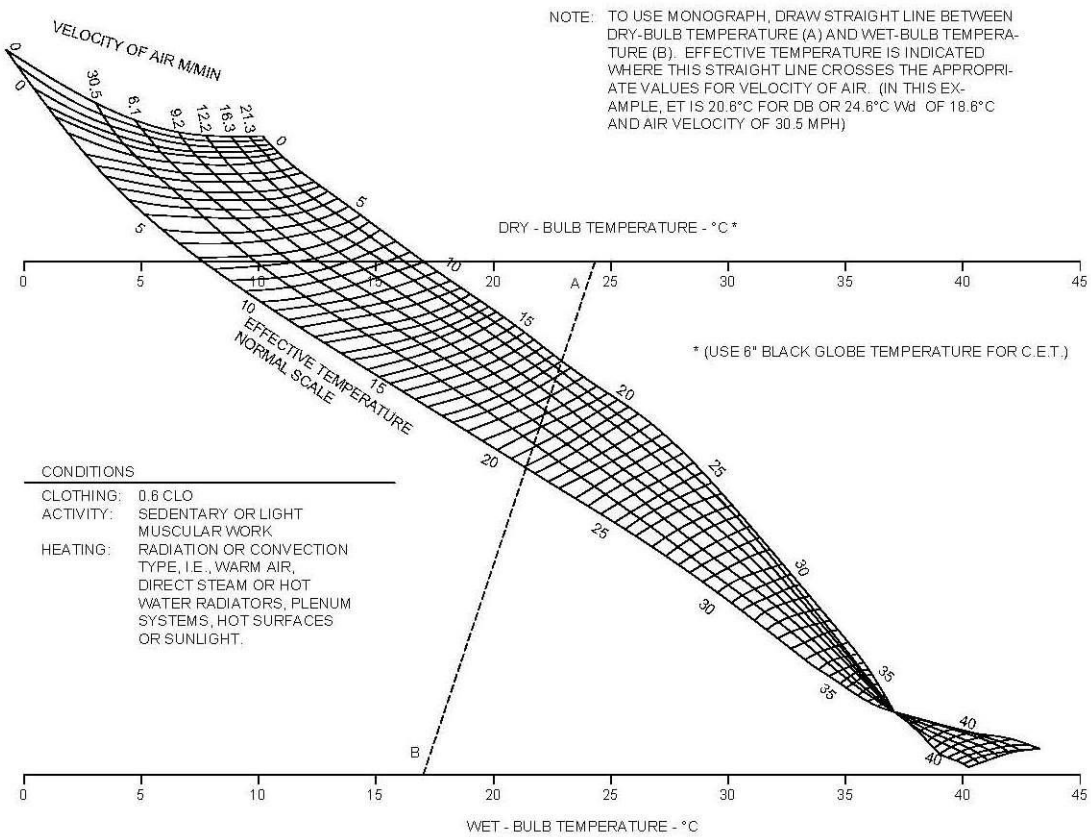

FIGURE 33. Effective temperature or corrected effective temperature.

5.5.2.1.3 Ventilation. Ventilation design shall meet the following requirements:

a. Fresh air supply for manned spaces. Adequate ventilation shall be assured by introducing fresh air into any personnel enclosure.

b. Minimum fresh air supply for crowded manned spaces. If the enclosure volume is 4.25 m³ (150 ft³) or less per person, a minimum of 0.85 m³ (30 ft³) of ventilation air per minute per person shall be introduced into the enclosure; approximately two-thirds shall be outdoor air.

c. Minimum fresh air supply for other manned spaces. For larger enclosures, the air supply per person shall be in accordance with both curves on figure 34.

d. Air velocities. Air velocities shall be in accordance with the following:

(1) Maximum air velocities. Air velocities shall not exceed 30 meters (100 feet) per minute (0.5 m/s or 1.7 ft/s) at any measured position in the space.

(2) Exception to maximum air velocities. An exception would be in work locations where spot cooling of personnel is provided. In these cases, air shall be moved past personnel at a velocity not more than 60 meters (200 feet) per minute.

(3) Maximum air velocities in workspaces with paper. Where manuals or loose papers are used, airspeed past these items shall be not more than 20 meters (65 feet) per minute, to preclude pages in manuals from being turned by the air or papers from being blown off work surfaces.

Downloaded from http://www.everyspec.com

e. CBRNE ventilation requirements. Under CBRNE conditions, ventilation requirements shall be modified as required. Consultation shall be made with habitability or medical experts to make this determination based upon size of the space, number of personnel, and level of physical exertion.

f. Ventilation requirements for harmful substances. Ventilation or other protective measures shall be provided to keep gases, vapors, dust, and fumes within the permissible exposure limits specified by 29 CFR 1910, the limits specified in the American Conference of Governmental Industrial Hygienists Threshold Limit Values, or applicable military-unique exposure limits specified in DODI 6055.1.

g. Prevention of fresh air contamination. Intakes for ventilation systems shall be located to minimize the introduction of contaminated air from such sources as exhaust pipes. For vehicle ventilation, see 5.6.6.2.

h. Full air exchanges. The rate of air exchange for enclosed spaces shall be at least six complete changes per hour.

i. Engine room ventilation. Engine room ventilation shall be in accordance with ISO 8861 and ISO 8862.

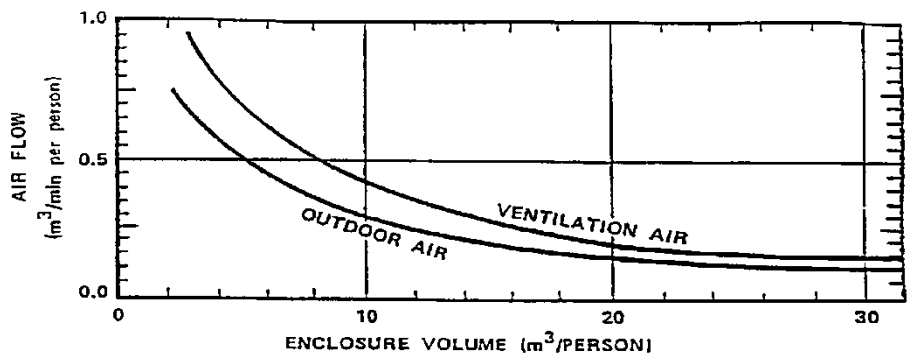

FIGURE 34. Minimum ventilation requirements.

5.5.2.1.4 Air conditioning. Air conditioning design shall meet the following requirements:

a. Maximum effective temperature for manned spaces. The effective temperature or corrected effective temperature within personnel enclosures used for detail work during extended periods shall be not greater than 29.5 °C (85 °F), preferably not greater than 25.5 °C (80 °F) (see figure 33).

b. Cold air discharge. Cold air shall not be directly discharged on personnel.

c. Relative humidity and temperature. The heating, ventilation, and air conditioning (HVAC) system shall be capable of providing and maintaining a relative humidity within a range from 30 percent minimum to 70 percent maximum with 40 percent to 45 percent preferred. The temperature/humidity design goal shall be between 21 °C and 25 °C (70 °F and 77 °F) and 45 percent humidity (see figure 35).

d. Temperature uniformity. The temperature of the air at floor level and at head level at any personnel position shall not differ by more than 5.5 °C (10 °F). A temperature difference of less than 3.0 °C (6 °F) is preferred. Side walls of the compartment shall be kept at equal temperatures insofar as possible; however, temperature differences of 11 °C (20 °F) or less do not significantly degrade comfort. In berthing areas, the difference between the inside bulkhead/wall surface adjacent to the berthing and the average air temperature within the space shall be less than 10 °C (18 °F).

e. Personal equipment thermal control. When special protective clothing or personal equipment, including full and partial pressure suits, fuel handler suits, body armor, arctic clothing, and temperature regulated clothing are required and worn, a comfort micro-climate between 20 °C (68 °F), l4 mm Hg ambient water vapor pressure and 35 °C (95 °F), 3.0 mm Hg ambient water vapor pressure is desirable and, where possible, shall be maintained by heat transfer systems.

f. Thermal tolerance and comfort zones. Temperature and humidity exposure shall not exceed the effective temperature limits given on figure 33 when corrected for air velocity (figure 34).

Downloaded from http://www.everyspec.com

g. Limited thermal tolerance zones. Where hard physical work is to be required for more than two hours, an environment not exceeding a wet bulb globe temperature or wet-dry index of 25 °C (77 °F) shall be provided. Where wearing protective clothing systems (which reduce evaporation of sweat from the skin) is required, the wet bulb globe temperature or wet-dry index requirements shall be decreased 5.0 °C (9.0 °F) for complete chemical protective uniforms, 4.0 °C (7.0 °F) for intermediate clothing systems, and 3.0 °C (5.0 °F) for body armor.

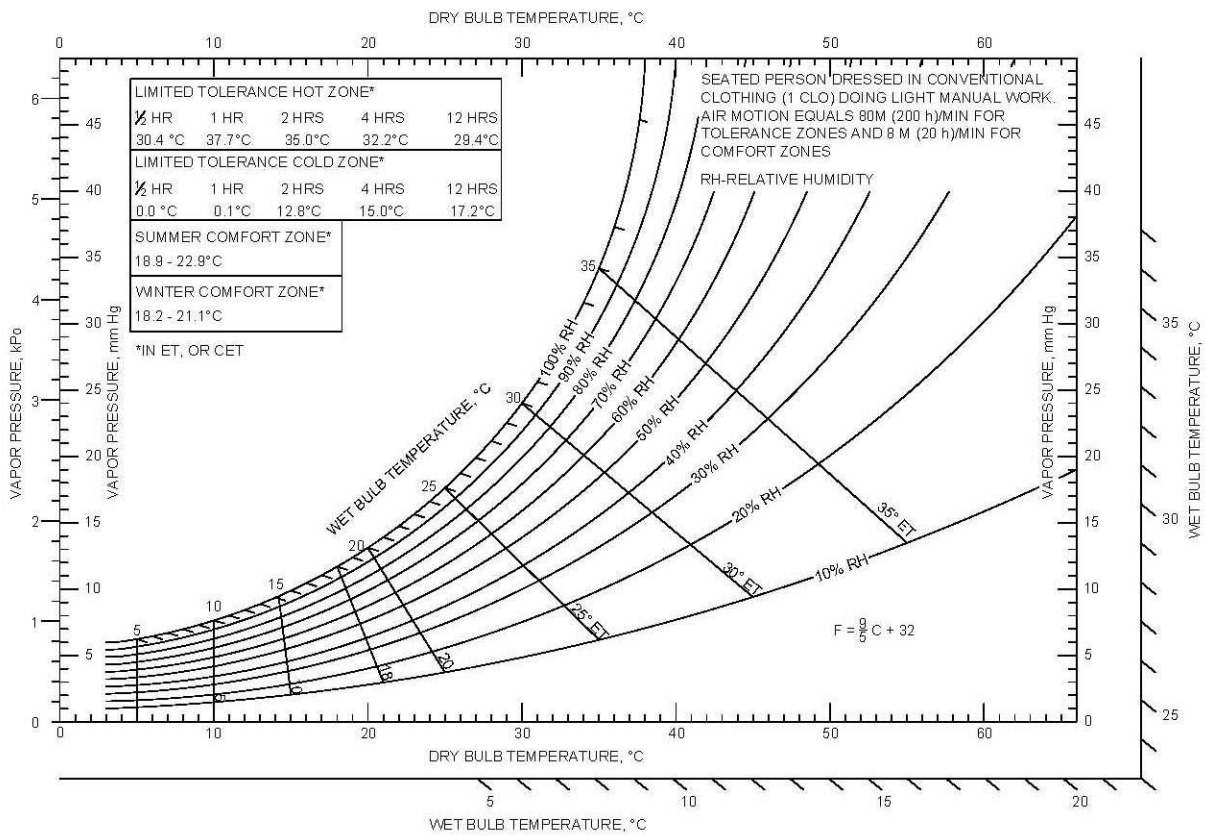

FIGURE 35. Summer and winter comfort zones and thermal tolerance for inhabited compartments.

5.5.2.2 Climate and other outdoor environmental considerations.

5.5.2.2.1 General usability and maintainability considerations under all anticipated outdoor conditions. Usability and maintainability of the designed system under all anticipated outdoor environments are critical design criteria. Design shall consider the effect of the maintenance and working environment on human performance.

5.5.2.2.2 Consideration of environmental effects on human performance. Consideration shall be given to adverse, as well as normal environmental factors of temperature, precipitation, humidity, sunlight, illumination, and dust, which could affect the ability of personnel to perform as required.

5.5.2.2.3 Adverse climate effects identification. Where the system will be used in or otherwise be exposed to precipitation, direct sunlight (solar loading), dusty conditions, or other climatic effects during normal operations and maintenance activities, the designer shall identify all adverse effects upon personnel and equipment.

5.5.2.2.4 Adverse climate effects mitigation. The design shall mitigate all identified adverse climate effects identified.

Downloaded from http://www.everyspec.com

5.5.2.2.5 Specific climatic considerations. The following specific climatic factors shall be taken into consideration.

a. Air conditioning for maintenance areas. Air conditioning shall be provided, when feasible, if temperatures exceed 29.5 °C (85.1 °F).

b. Ventilation for maintenance areas. Adequate ventilation shall be provided in equipment trailers or other locations where personnel are performing monitoring, servicing, or other maintenance tasks.

c. Ventilation and air conditioning for maintenance areas with solar loading. When maintenance technicians must work for long periods of time inside equipment exposed to the sun, air conditioning or a large volume of air shall be provided in the enclosure in compliance with established ventilation criteria.

d. Heat protection for maintenance areas with solar loading. Where feasible, appropriate heat reflector and absorbent surfaces on equipment which must be maintained shall be employed while personnel and equipment are exposed to the sun.

e. Frequent maintenance areas. Where frequent maintenance, such as checking or adjusting a component, is impossible or delayed because of excessively high temperatures, the equipment shall be redesigned so the component is in a cooler area. If redesign of equipment to move frequent maintenance components to a cooler area is impossible, provision shall be made to cool the component to permit the required maintenance.

f. Design for maintenance wearing protective equipment. Under extremely cold conditions or where there is significant wind-chill (below –12 °C (10.4 °F)), design for operations and maintenance shall accommodate the special requirements of special gloves or other protective equipment.

g. Shelter for above organizational level maintenance under cold conditions. In cold environments, heated working areas for maintenance personnel above the organizational level shall be provided.

h. Design for organizational level maintenance under cold conditions. Maintenance shall be able to be performed without shelter at the organizational level when the temperature is as low as -29 °C (-20.2 °F) or an equivalent wind chill factor exists. For organizational maintenance activities, the equipment shall be designed (use quick-disconnect servicing equipment) to require a minimum sustained working time. Procedures for organizational level maintenance under cold conditions shall be clear and specific.

i. Heating for maintenance activities. When monitoring, servicing, repairing, or other similar maintenance tasks are to be performed in areas in which the temperature will drop below 18 °C (65 °F), air heating shall be provided if maintenance tasks are conducted in a shirtsleeve environment.

j. Maintenance accessibility under cold conditions. The following shall be considered in design of maintenance accessibility for winterized equipment.

(1) Winterization equipment, such as preheaters, shall be positioned where they do not interfere with accessibility to perform maintenance tasks.

(2) The location of access doors and panels shall consider the effects of rain, snow, and ice formation.

(3) Where feasible, workspace access openings shall be provided to accommodate personnel wearing cold-weather clothing.

(4) Drains shall be provided that can be adequately accessed by personnel wearing cold-weather clothing to drain liquids to prevent freeze damage.

(5) In areas where technicians may suffer freezing if bare hands are used when maintaining equipment such as liquid oxygen lines, sufficient access and internal workspace shall be provided to permit them to wear the appropriate protective gloves.

(6) A means shall be provided for drying of equipment which is to be returned to out-of-door arctic temperatures after shop maintenance has been performed on it.

Downloaded from http://www.everyspec.com

5.5.3 Illuminance.

5.5.3.1 Workspace lighting.

5.5.3.1.1 General. General and supplementary lighting shall be used as appropriate to ensure that illumination is compatible with each operator and maintainer task situation.

a. Lighting controls at entrances and exits. Lighting controls for illumination shall be provided at entrances and exits of enclosed workplace areas.

b. Illumination of lighting controls. Lighting controls shall be illuminated in areas that are frequently darkened.

c. Equipment lighting illumination levels. Where equipment is to be used in enclosures and is not subject to blackout or special low-level lighting requirements, illumination levels shall be as specified by table XXII.

d. Illumination source distribution to reduce glare. Illumination shall be distributed so as to reduce glare and specular reflection. Some unusual inspection tasks may require point-source illumination in which glare cannot be avoided.

e. Flicker. Light sources shall not have a perceptible flicker.

f. Dimming. Where there is natural outdoor light or other variable ambient lighting conditions or requirements, a capability for variable equipment illumination control shall be provided. Variable equipment illumination control shall be commensurate with the range of ambient conditions, including dark adaptation requirements. Dimming for all displays, backlit keyboards, panel indicators, egress, and tasking lighting shall allow for fine grained control by the user.

Downloaded from http://www.everyspec.com

TABLE XXII. Specific task illumination requirements.

Work area for type of task	Illumination level 1/		Work area or type of task	Illumination level	
	Preferred lux (fc)	Minimum lux (fc)		Preferred lux (fc)	Minimum lux (fc)
Assembly, bench, & inspection			Mess room (cafeteria)	540 (50)	300 (28)
Coarse work detail	540 (50)	325 (30)	Muster station	540 (50)	200 (18)
Medium work detail	810 (75)	540 (50)	Medical space		
Fine work detail	1075 (100)	810 (75)	Waiting area	755 (70)	540 (50)
Precise work detail	3230 (300)	2155 (200)	Exam/treatment room	1075 (100)	810 (75)
Assembly (missile component)	1075 (100)	540 (50)	Missile facilities		
Bakery	540 (50)	325 (30)	General inspection	540 (50)	325 (30)
Battery room	300 (28)	200 (18)	Repair and service	1075 (100)	540 (50)
Bomb shelters & mobile shelters	20 (2.0)	10 (1.0)	Storage areas	215 (20)	215 (20)
Bridge	540 (50)	325 30)	Offices		
Business machine operation	1075 (100)	540 (50)	General	755 (70)	540 (50)
Cargo handling (weather decks)	215 (20)	150 (14)	Computer workstation	540 (50)	300 (28)
Chart room			Ordinary visual tasks	540 (50)	325 (30)
General lighting	540 (50)	150 (14)	Paint room		
On chart table	1075 (100)	810 (75)	General	540 (50)	325 (30)
Circuit diagram	1075 (100)	540 (50)	Color matching	2155 (200)	2155 (200)
Control rooms			Passageways (walkways, hallways)	215 (20)	150 (14)
General lighting	540 (50)	325 (30)	Pump room	340 (32)	225 (20)
Computer work	300 (28)	300 (28)	Pump rows, valves	200 (18)	150 (14)
Computer work station	540 (50)	300 (28)	Purifier room (water or oil)	500 (46)	215 (20)
Consoles (front)	540 (50)	325 (30)	Radar room	540 (50)	200 (18)
Consoles (rear)	325 (30)	110 (10)	Radio room	540 (50)	540 (50)
Compressor/pump/generator	300 (28)	200 (18)	Reading		
Crane cab	540 (50)	400 (37)	Large print	325 (30)	110 (10)
Dials/gauges	540 (50)	325 (30)	News print	540 (50)	325 (30)
Electrical equipment testing	540 (50)	325 (30)	Small type/prolonged reading	755 (70)	540 (50)
Elevators	325 (30)	215 (20)	Recording	755 (70)	540 (50)
Emergency lighting	55 (5.0)	30 (3.0)	Recreation rooms	540 (50)	300 (28)
Emergency generator room	340 (32)	225 (20)	Repair rooms		
Escape trunks	55 (5.0)	30 (3.0)	General lighting	540 (50)	325 (30)
Fan room	200 (18)	150 (14)	Instrument repair	2155 (200)	1075 (100)

Downloaded from http://www.everyspec.com

TABLE XXII. Specific task illumination requirements – Continued.

Work area for type of task	Illumination level [1/]		Work area or type of task	Illumination level	
	Preferred lux (fc)	Minimum lux (fc)		Preferred lux (fc)	Minimum lux (fc)
Fire pump room	300 (28)	200 (18)	Sanitary spaces		
Food storage			General	540 (50)	325 (30)
Non-refrigerated	540 (50)	200 (18)	Sinks and mirrors	540 (50)	540 (50)
Refrigerated	215 (20)	100 (9.0)	Toilets	540 (50)	150 (14)
Galley	755 (70)	540 (50)	Scales	540 (50)	325 (30)
Gyro room	300 (28)	200 (18)	Screw fastening	540 (50)	325 (30)
HVAC room	300 (28)	200 (18)	Service areas (general)	215 (20)	110 (10)
Instrument shop	540 (50)	325 (30)	Shaft alley	215 (20)	110 (10)
Laundry			Snack and coffee bar	540 (50)	500 (46)
General	540 (50)	540 (50)	Stairs and ladders	215 (20)	110 (10)
Hand pressing	1395 (150)	1395 (150)	Storage areas		
Lay down areas	540 (50)	200 (18)	General warehouse	110 (10)	55 (5.0)
Laboratory	540 (50)	360 (33)	Large parts	110 (10)	55 (5.0)
Library	755 (70)	540 (50)	Small parts	300 (28)	300 (28)
Loading/off-loading area	340 (32)	150 (14)	Fine parts	540 (50)	540 (50)
Lounges	540 (50)	300 (28)	Steering gear room	540 (50)	300 (28)
Manifold area	215 (20)	100 (9.0)	Switchboards	540 (50)	325 (30)
Machine operation (automatic)	540 (50)	325 (30)	Tanks	215 (20)	215 (20)
Machine shop			Testing (see assembly)		
General lighting	540 (50)	325 (30)	Welding/mechanical shop	500 (46)	500 (46)
Fine bench work	1075 (100)	745 (80)	Windlass room	215 (20)	100 (9.0)
Maintenance platform	540 (50)	200 (18)	Work and repair areas	700 (65)	540 (50)
Machinery room	540 (50)	200 (18)			

FOOTNOTE:

[1/] As measured at the task object or 76 cm (30 in) above the floor.

NOTE:

1. Task lighting inside vehicles shall be designed to accommodate the specific tasks to be performed within the vehicle while still ensuring that the lighting will not distract or impair the driver's performance, nor create an unacceptable visual signature. This may include continuously variable intensity controls.

5.5.3.1.2 Location. Lights shall not be placed where persons climbing stairs or ladders would look directly into the light.

5.5.3.1.3 Reach. Light fixtures shall not be placed in locations that are difficult to reach for bulb replacement or other maintenance.

5.5.3.1.4 Mounting. Light fixtures mounted on exposed sides of ships or structures shall be located so as not to shine into the eyes of users of ship or structure-mounted cranes or approaching aircraft or helicopters.

5.5.3.1.5 Fall protection. Stanchions or poles supporting light fixtures that are located at the edge of ships or structures shall have anchor points on each side of the stanchion or pole so a person wearing a safety harness can be secured to at least one of the anchor points on the stanchion or pole at all times when climbing to and from the fixture.

5.5.3.1.6 Dark adaptation and night vision.

Downloaded from http://www.everyspec.com

a. Night vision. When night vision is required, low-level white lighting (with the capability to dim to zero) shall be used. Where night vision imaging devices are anticipated to be used in the proximity, night vision imaging system (NVIS) green shall be used.

b. Point-source-detection. When point-source detection is a concern, NVIS green LEDs or low level bulbs shall be used to mask point-source-detection from task lighting. Where possible, all light sources and displays shall be mounted below the lowest window frame. Where required, NVIS green is preferred to red due to increased readability of black and white text under low level luminance conditions.

c. Red lighting. Red lighting shall not be used in areas where color recognition, readability of maps and color symbology, or dark adaptation is required.

d. Dimming. Where dark adaptation is required (e.g., vehicular cabs or ship bridge), all displays and light-emitting sources shall be variably dimmable to at least a low luminance level of 0.000035 cd/m² (0.00001 fL), and shall be variably dimmable to at least a low luminance level of 0.00035 cd/m² (0.0001 fL). (See 5.5.3.1.1.f for more detail.)

e. Night vision device (NVD) compatibility. Where compatibility with night vision devices is required, the spectral output of all light emitting from or illuminating a display shall be in accordance with MIL-STD-3009 so as to not interfere with or cause "blooming" in the NVDs to be used. The lighting shall be continuously variable to the full OFF position.

5.5.3.1.7 Portable lighting. Portable lighting shall be provided for personnel performing visual tasks in areas where fixed illumination is not provided.

5.5.3.1.8 Colored ambient illumination. Except where required for dark adaptation or night vision device compatibility, colored ambient illumination shall not be used.

5.5.3.1.9 Lighting fixtures. Factors which shall be considered in selecting the number and location of fixtures are accessibility of lights, convenient operation of switches and other controls, and the absence of glare from the fixture itself or indirectly in the form of reflection from windows or other reflecting surfaces.

5.5.3.1.10 Emergency lighting. Emergency lighting shall be provided for use when the power supply to the normal lighting is not available or fails. Emergency lighting shall be powered from a source independent of that supplying the normal lighting. Duration of emergency lighting shall be commensurate with the duration of time that personnel are expected to maintain mission performance within that space (for the conditions under which the lighting was lost).

5.5.3.1.11 Display lighting. Display luminance shall be in accordance with the values in table XXIII.

Downloaded from http://www.everyspec.com

TABLE XXIII. Recommendations for display luminance.

Condition of use	Lighting technique [1/]	Brightness of markings cd/m^2 (fL)	Brightness adjustment
Indicator reading, dark adaptation necessary	White flood, indirect, or both with operator choice	0.07 – 0.35 (0.02 – 0.1)	Continuous throughout range
Indicator reading, dark adaptation not necessary but desirable	White flood, indirect, or both with operator choice	0.07 – 3.5 (0.02 – 0.1)	Continuous throughout range
Indicator reading, dark adaptation not necessary	White flood	3.5 – 70 (1.0 – 20)	Fixed or continuous
Panel monitoring, dark adaptation necessary	White flood, indirect, or both with operator choice	0.07 – 0.35 (0.02 – 0.1)	Continuous throughout range
Panel monitoring, dark adaptation not necessary	White flood	35 – 70 (10 – 20)	Fixed or continuous
Possible exposure to bright flashes, restricted daylight	White flood	35 – 70 (10 – 20)	Fixed
Chart reading, dark adaptation necessary	White flood	0.35 – 3.5 (0.1 – 1.0)	Continuous throughout range
Chart reading, dark adaptation not necessary	White flood	17 – 70 (5.0 – 20)	Fixed or continuous

FOOTNOTE:

[1/] Where detection of ground vehicles or other protected assets by image intensifier night vision devices must be minimized, NVIS green shall be used in lieu of low-level cool temperature white light.

NOTE:

1. Under scotopic conditions, character contrast, stroke width, and character size must be assessed for readability under the expected operational conditions.

5.5.3.2 Contrast ratios. The contrast ratios between lightest and darkest areas and between tasks and surroundings shall meet the criteria presented in table XXIV.

Downloaded from http://www.everyspec.com

TABLE XXIV. Contrast ratios.

Comparison	Environmental Classification 1/		
	A	B	C
Between lighter surfaces and darker surfaces within the task.	5:1	5:1	5:1
Between tasks and adjacent surroundings.	3:1	3:1	5:1
Between tasks and more remote surfaces.	10:1	20:1	2/
Between luminaries and adjacent surfaces.	20:1	2/	2/
Between the immediate work area and the rest of the environment.	40:1	2/	2/

NOTES:

1/ A: Interior areas where reflection off entire space can be controlled for optimum visual conditions.

B: Areas where reflection off immediate work area can be controlled, but there is only limited control over remote surroundings.

C: Areas (indoor and outdoor) where it is impractical to control reflection and difficult to alter environmental conditions.

2/ Contrast ratio control not practical.

5.5.3.3 Glare.

5.5.3.3.1 General. General glare designs shall meet the following:

a. Glare avoidance. Lighting shall be designed and located to avoid glare from working and display surfaces as viewed from the normal working position.

b. Maximum luminance ratio. The maximum luminance ratio between any two different sources of luminance light within an operator or maintainer's field of view shall not exceed 5:1.

c. Nonreflective work surfaces. To reduce glare, nonreflective or matte finished surfaces shall be provided on consoles, panels, and other work surfaces.

d. Nonreflective surfaces within field of view. Placement of smooth, highly polished surfaces within 60 degrees of a person's normal visual field shall be avoided.

5.5.3.3.2 Direct.

a. Bright light sources within the field of view. Direct glare arises from a light source within the visual work field. Direct glare shall be controlled by avoiding placing bright light sources within 60 degrees of the center of the visual field.

b. Indirect lighting. Since most visual work is at or below the eye's horizontal position, placing luminaries high above the work area minimizes direct glare. The following techniques may also be used to reduce glare: (1) using indirect lighting; (2) using a greater number of relatively dim light sources; and (3) using polarized light, shields, hoods, or visors to block the glare in confined areas.

5.5.3.3.3 Eyeglasses. The glare-control methods in 5.5.3.3.2a and 5.5.3.3.2b assume the user is using unaided vision. Eyeglasses reflect glare into the eyes if a bright light behind the viewer is between 30 degrees above and 45 degrees below the line of sight, or if it is within 20 degrees left or right of the line of sight, and shall therefore be avoided.

5.5.3.4 Reflected.

5.5.3.4.1 General. Large surface areas shall be covered with non-saturated colors such as tints, pastels, and warm grays that are non-glossy. Some noncritical small areas such as door frames and molding may be glossy if ease of cleaning is essential.

Downloaded from http://www.everyspec.com

5.5.3.4.2 Reflectance. Reflectance designs shall meet the following:

a. Specular reflection from task background. Luminance of specular reflection from the task background shall be not greater than three times the average luminance of the immediate background.

b. Specular reflection from remote task. Luminance of specular reflection from a remote task shall be not greater than 10 times the average luminance from the remote background.

c. Specular reflection from work surface. Work surface reflection shall be diffused and shall not exceed 20 percent specularity.

d. Specular reflection from surfaces within field of view. Smooth, highly polished surfaces shall not be placed within 60 degrees of the user's normal line of sight.

e. Placement of bright lights. To avoid reflecting glare of display faces or eyeglasses into the user's eyes, bright light sources shall not be placed behind users.

5.5.3.4.3 Wall reflectance. Wall surface areas in working and living areas shall be covered with non-saturated light colors such as tints, pastels, whites, and light shades of gray to increase the reflectance of space lights. Preferred surface reflectance values for spaces such as offices, control rooms, and maintenance areas are shown on figure 36.

5.5.3.4.4 Dark adapted workspaces. In vehicles, ships, observation structures, and other spaces where users may need to be dark adapted (e.g., cockpit, ship bridge, vehicle cabs) the interior walls or bulkheads shall be a matte black. This will minimize specular reflection from interior light sources.

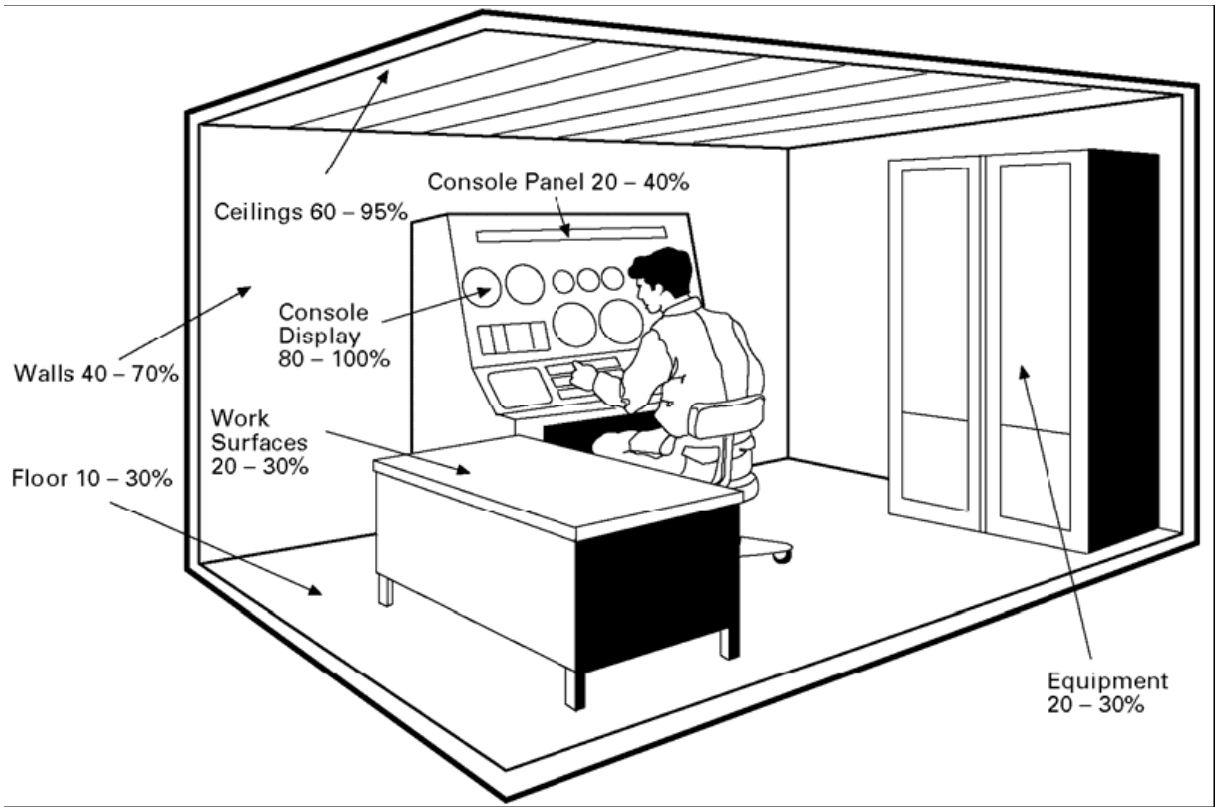

FIGURE 36. Surface reflectance values.

Downloaded from http://www.everyspec.com

5.5.4 Acoustical energy and noise.

5.5.4.1 General. Personnel shall be provided an acoustical environment that will not cause personnel injury, interfere with voice or any other communications, cause fatigue, or in any other way degrade system effectiveness. Noise affects human health and performance in a number of ways. Apart from environmental considerations (such as annoyance to the community at large which lie outside the scope of this document), the most critical effects include noise-induced hearing injury and the impact of signal comprehension on communications, survivability, and mission effectiveness (lethality). For hearing conservation purposes, continuous noise (such as from machinery, vehicles, aircraft) is measured either in terms of the A-weighted sound level expressed in dBA, or in terms of the equivalent continuous sound level (8.0 hours), usually written as Leq (8.0 hours) and also expressed in dBA.

5.5.4.2 Equipment and system design. Equipment and total system designs shall be in accordance with MIL-STD-1474. If any conflict is identified in interpretation or applicability between this document and MIL-STD-1474, it shall be resolved by the Government.

5.5.4.3 Total system compliance. The fact that a component which contributes to the overall noise may be Government furnished equipment shall not eliminate the requirement that the total system conform to the criteria herein.

5.5.4.4 Hazardous noise.

5.5.4.4.1 Allowable limits. Equipment shall not generate noise in excess of maximum allowable levels in accordance with MIL-STD-1474.

5.5.4.4.3 Mitigation. Where sustained noise levels cannot be maintained below 75 dBA (continuous), and below 85 dBA (8.0-hour exposure), and below 140 dB peak SPL (impulse or impact), the procuring activity will require personnel to use personal hearing protection devices.

a. Hearing protection device compatibility with mission activities. If personal hearing protection devices are authorized for the design, the system design shall accommodate the wearing of personal hearing protection devices (ear plugs or ear muffs) within the context of mission activities.

b. Specific accommodations for hearing protection device compatibility. Accommodations for hearing protection devices shall include communications activities, listening (auditory surveillance) tasks, visual tasks, physical comfort in the operational environment, and any other considerations impacting the likelihood that the user would wear the personal hearing protection devices.

c. Hearing protection device performance. Personnal hearing protection devices shall be provided in accordance with figure 37.

Downloaded from http://www.everyspec.com

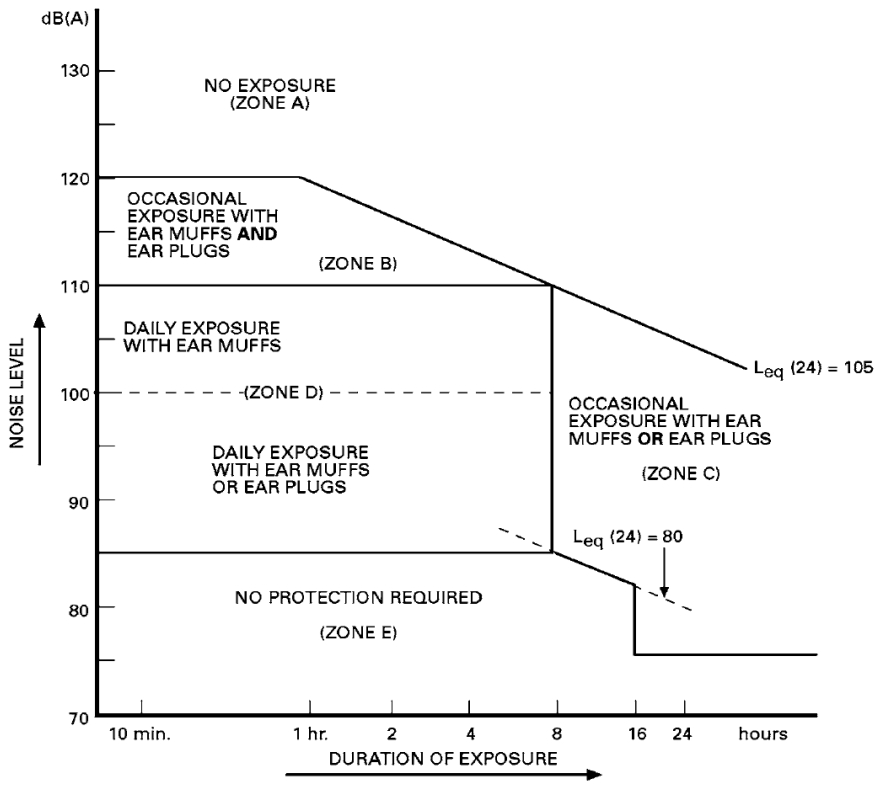

NOTES:

1. Figure and description adapted from IMO Assembly Resolution A.468 (XII).
2. Zone A, Maximum exposure with protection: No personnel, even those wearing hearing protectors, shall be exposed to levels exceeding 120 dBA or to an Leq(24) (24-hour equivalent continuous sound level) exceeding 105 dBA.
3. Zone B, Occasional exposure: Only occasional exposure shall be allowed and both ear muffs and ear plugs shall be used unless the exposure duration is restricted to not more than 10 minutes when only ear muffs or plugs are required.
4. Zone C, Occasional exposure: Only occasional exposures shall be allowed and ear muffs or plugs shall be required.
5. Zone D, Daily exposure: If personnel routinely work with daily exposure in spaces with noise levels within Zone D, hearing protectors shall be worn.
6. Zone E, Maximum exposure without protection: For exposures of less than 8 hours, personnel without hearing protection shall not be exposed to noise levels exceeding 84 dBA. When personnel remain for more than 8 hours in spaces with a high noise level, an Leq(24) of 80 dBA shall not to be exceeded. Consequently, for at least a third of each 24 hours, the personnel shall be subject to an environment with a noise level not exceeding 75 dBA.

FIGURE 37. Permissible noise exposure limits.

Downloaded from http://www.everyspec.com

5.5.4.4.4 Exposure limits and protection. Maximum permissible daily and occasional noise exposure limits are shown on figure 37.

a. Alternative noise exposure limits. As an alternative to figure 37, the personal exposure to a 24-hour equivalent continuous sound level shall be no greater than 80 dBA.

b. Hearing protection duration. Each individual's daily exposure duration in spaces requiring the use of hearing protectors shall not exceed 4.0 hours continuously or 8.0 hours total.

c. High noise area. Any area where noise levels exceed 84 dBA shall be classified as a "High Noise Area". Consideration shall be made to reduce personnel exposure to high noise by relocating controls, displays, and workstations from "High Noise Areas" by implementing remote monitoring of equipment in separate, acoustically isolated spaces.

d. Hazard signage. A DANGER hazard sign shall be posted at each entrance into every "High Noise Area." The sign shall be in accordance with the requirements for hazard warning signs (see 5.7.2.1) and shall describe the level of protection required based on figure 37.

e. Hearing protection. The use of earplugs, earmuffs, or both is based on the noise level and length of exposure. Hearing protectors selected for use shall provide at least the noise attenuation at the ear as shown in table XXV. So long as the hearing protection levels in table XXV can be met, noise cancelling headsets may also be used.

f. Portable equipment. If hand tools or other portable or localized equipment produce noise levels that exceed 84 dBA, a warning sign shall be posted at the work site or on the equipment identifying the hazard and requiring the use of hearing protectors at that site or with that equipment. The warning sign shall comply with the DANGER label requirements for hazard warnings (see 5.7.2.1).

TABLE XXV. Recommended noise attenuation from hearing protectors.

Hearing protection	Minimum attenuation
Ear plugs	20 dBA
Ear muffs	30 dBA
Ear plugs and ear muffs	35 dBA

5.5.4.5 Nonhazardous noise.

5.5.4.5.1 Noise reduction to support verbal communication. Workspace noise shall be reduced to levels that permit necessary direct (person-to-person) and telephone communication and establish an acceptable acoustical work environment.

5.5.4.5.2 Noise level criteria definition. Criteria for workspaces are defined by the A-weighted sound level (dBA) (see 5.5.4.5.5 through 5.5.4.5.10).

5.5.4.5.3 Precedence of A-weighted sound levels. The A-weighted sound level is the desired requirement (see figure 38).

5.5.4.5.4 Permissible distance guidance. Permissible distance between a speaker and listeners for specified voice levels and ambient noise levels provides guidance on the relationship between required vocal effort, speaker-to-listener distance, and noise level. Procedures for determining speech intelligibility are provided in 5.3.1.8.1.

5.5.4.5.5 General workspaces. Areas requiring occasional telephone use or occasional direct communication at distances up to 1.5 meters (5 feet) shall not exceed 75 dBA (e.g., maintenance shops and shelters, garages, keypunch areas, shipboard engineering areas).

Downloaded from http://www.everyspec.com

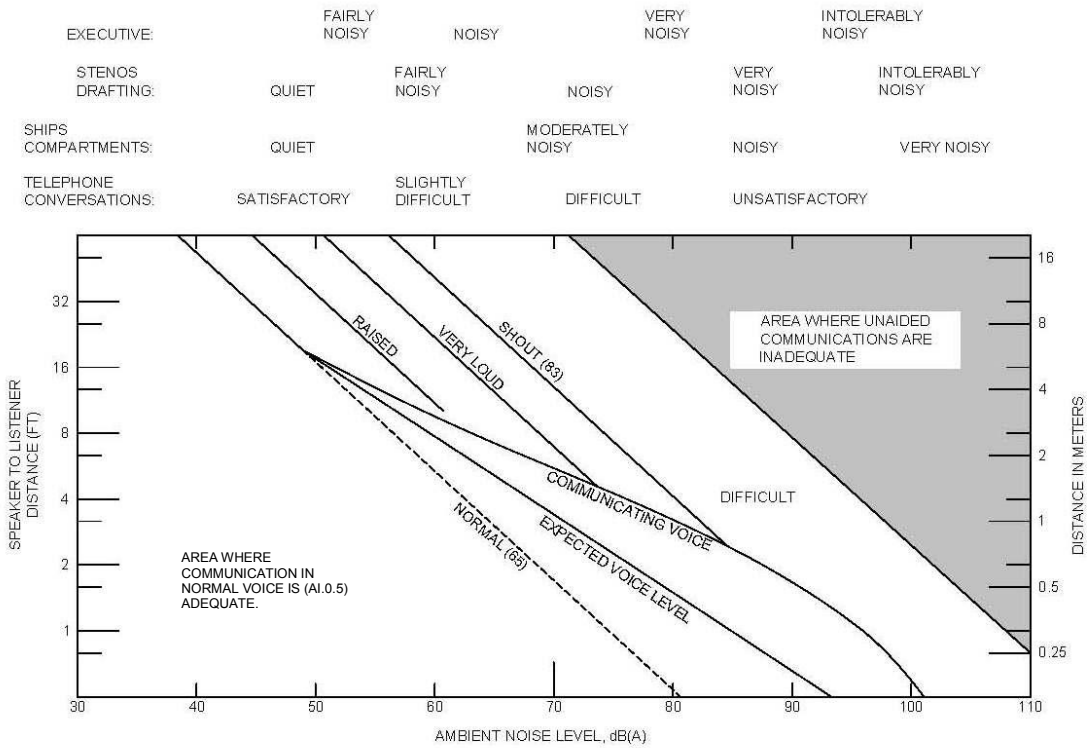

FIGURE 38. Permissible distance between a speaker and listeners for specified voice levels and ambient noise levels.

5.5.4.5.6 Operational areas. Areas requiring frequent telephone use or occasional direct communication at distances up to 1.5 meters (5 feet) shall not exceed 65 dBA (e.g., operation centers, mobile command and communication shelters, combat information centers, word processing centers).

5.5.4.5.7 Large workspaces. Areas requiring no difficulty with telephone use or requiring occasional direct communication at distances up to 4.6 meters (15 feet) shall not exceed 55 dBA (e.g., drafting rooms, shop offices, laboratories).

5.5.4.5.8 Small office spaces/special areas. Areas requiring no difficulty with direct communication shall not exceed 45 dBA (e.g., conference rooms, libraries, offices, command and control centers).

5.5.4.5.9 Extreme quiet areas. Areas requiring extreme quiet shall not exceed 35 dBA (e.g., recording studios).

5.5.4.5.10 Shipboard areas. The maximum permissible noise levels for specific shipboard spaces or maritime installation shall not exceed those indicated in table XXVI. Levels for spaces and categories not covered in table XXVI shall be as given in the detailed shipbuilding specification (e.g., sonar control rooms, ward rooms). Equipment noise acceptance criteria to achieve specified space levels shall be in accordance with shipboard equipment noise requirements of MIL-STD-1474.

Downloaded from http://www.everyspec.com

TABLE XXVI. Maximum permissible noise levels for ships and maritime structures.

Space	Noise limit dBA (maximum)	Noise limit dBA (preferred)
Work spaces:		
Machinery space (continuously manned)	90	84
Machinery space (not continuously manned)	110	95
Machinery control rooms	75	65
Workshops	84	75
Non-specified spaces	95	84
Control rooms and offices	70	65
Open deck areas (cargo handling)	95	80
Fan Rooms	100	84
Navigation spaces:		
Navigation bridge and chartroom	65	55
Listening post, including bridge wings and windows	70	60
Radio rooms	60	55
Radar room/areas	65	55
Ship's offices	75	60
Accommodation spaces:		
Cabins	60	50
Hospitals, dental, first aid centers	60	45
Mess rooms	65	55
Indoor recreation rooms	65	50
Open deck recreation areas	84	75
Offices	65	55
Service areas:		
Galleys	75	65
Serving lines, pantries, storerooms	84	70
Laundries	84	75
Normally unoccupied spaces:		
Spaces not specified	90	84

NOTE:

1. All spaces with noise in excess of 84 dBA require the use of hearing protection as shown on figure 37. Measurement techniques shall be in accordance with IMO Assembly Resolution A.468(XII).

5.5.4.6 Facility design.

5.5.4.6.1 General. The workspace or facility design shall minimize the ambient noise level to the extent feasible through effective sound reduction or attenuation to meet the criteria herein.

Downloaded from http://www.everyspec.com

5.5.4.6.2 Attenuation by materials and layout.

a. Use of acoustic materials. Acoustic materials with high sound-absorption coefficients shall be provided as necessary in the construction of floors, walls, and ceiling to provide the required sound control.

b. Minimization of noise transmission. Transmission of excessive noise into rooms and work stations shall be attenuated by such means as high-density materials, multilayer materials (e.g., concrete, gypsum board, and sound attenuating (STC rated) ceiling tiles (high density)), and construction techniques (e.g., staggered seams in walls, acoustic caulking of walls to the hard structure of the floor and ceiling (not suspended ceiling), attenuators in heating, ventilation and air conditioning (HVAC) supply and return ducts, STC-rated doors, and at least double-paned windows).

c. Floor, wall, and ceiling treatments to mitigate reverberation. Excessive reverberation in rooms and work stations may be controlled by applying sound absorbing materials on floor, ceiling tiles, and wall treatments.

d. Construction techniques to mitigate noise. Excessive noise in rooms and work stations shall be attenuated by such means as staggered construction of walls, staggering of doors in corridors or between rooms, and use of thick-paned or double-paned windows.

5.5.4.6.3 Reduction of reverberation time. Where speech communication is a consideration, the acoustical treatment of facilities shall be sufficient to reduce reverberation time below the applicable limits of figure 39.

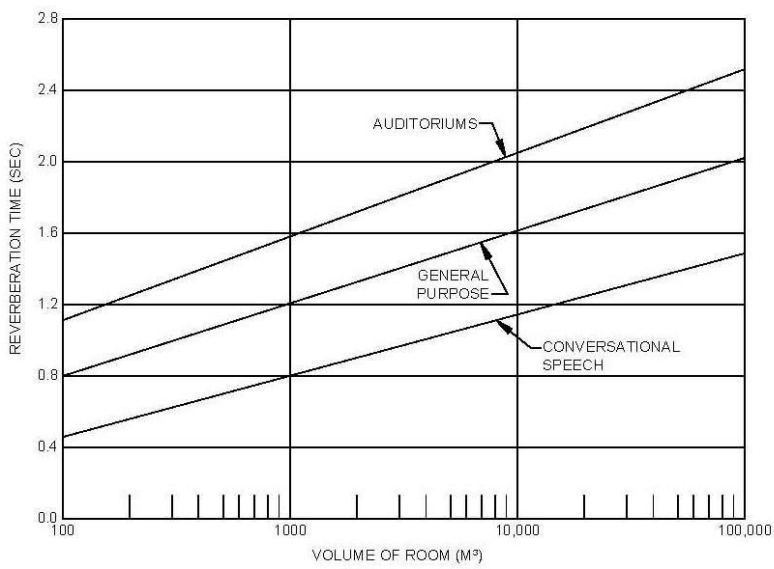

FIGURE 39. Range of acceptable reverberation time.

5.5.5 Vibration and shock.

5.5.5.1 Vehicular whole-body vibration. The following provisions apply to whole-body vibration, in accordance with ISO 2041 and ISO 5805, where the vibratory motions are limited to those transmitted to the human body as a whole through supporting surfaces. This includes the feet for the standing occupant, the buttocks, back, and feet for the seated occupant, and the supporting surface of the occupant lying on his or her back. The applicable frequency range is defined as:

a. 0.1 to 0.5 Hertz for motion sickness.

b. 0.5 to 80 Hertz for health, performance, comfort, and perception.

Downloaded from http://www.everyspec.com

5.5.5.1.2 Operational environments. The anticipated operational dynamic environment and exposure duration is required to determine the analysis method and threshold for whole-body vibration or shock. Table XXVII defines environment categories expected to occur during operation of military vehicles. For each category, the exposure duration determines the exposure threshold. These environments are associated with vibration occurring primarily in the frequency range of 0.5 Hertz and above.

a. Mitigation of whole-body vibration by design. Vehicles for use on land, sea, or air shall be designed to control the transmission of whole-body vibration to levels that will permit safe and effective operation and maintenance. These vehicles include, but are not limited to, heavy ground vehicles, ATVs, trucks, aircraft, high speed boats, and ships.

b. ISO 2631 and evaluation of whole-body vibration and shock. Evaluation of military vehicle vibration and its possible effects on health, performance, comfort, perception, and motion sickness shall be in accordance with ISO 2631 and associated amendments. The basic evaluation method shall be applied for all environment categories listed in table XXVII. Criteria are provided in ISO 2631-1, including the calculation of the crest factor, to determine if additional evaluation methods should be considered for assessing health, particularly with regard to vibration exposures with high crest factors, occasional or substantial shocks, or transient vibration (Categories B and C).

c. Measurement of whole-body vibration and shock. For Categories A and B, triaxial accelerations shall be measured at the interface between the human and the predominant vibration source. For standing occupants this is the floor or deck. For seated occupants, measurements shall be taken at the interface between the buttocks and seat support, usually a seat cushion (seat pan). Triaxial accelerations shall also be measured at the interfaces between the occupant and the seat back and foot support, particularly for assessing comfort and perception in accordance with ISO 2631. For Categories A and B, the acceleration time histories need to be sufficiently long so that a minimum of 5 to 10 complete cycles for the minimum frequency are obtained. For Category C, triaxial accelerations shall be measured on the occupant at the lower lumbar (L4) or as close as possible to the interface of the human and predominant impact source (e.g., seat cushion). If instrumentation locations other than at the lower lumbar are used, mathematical transfer functions shall be applied to appropriately translate between the impact force at the source and the human back. For statistical significance a minimum of 300 impact encounters is required. (For most high speed craft and seaway conditions, this equates to approximately 30 minutes for a heading relative to a particular seaway.) For additional detail on instrumentation, see ISO 2631-1 and ISO 5348.

TABLE XXVII. Operational environment types.

Category	Description of environment
A	The environment is classified as strictly vibration and can be characterized as oscillatory in nature (periodic).
B	The environment is classified as predominately vibration and can be characterized as oscillatory in nature (periodic) but also contains occasional shocks or transient vibration (aperiodic).
C	The environment may contain some underlying vibration, but is dominated by repeated or multiple shocks or transient vibration.

5.5.5.1.3 Health. In an effort to minimize or prevent adverse health effects or injury, the vehicle design shall be in accordance with the following requirements for each of the operational environment categories:

a. Category A: vibration. Triaxial acceleration data shall be processed in accordance with ISO 2631-1 using the basic evaluation method and the frequency weightings and multiplying factors for health. For exposures lasting 8.0 hours or less, the seat pan frequency weighted triaxial RMS accelerations in any orthogonal direction for any occupied space shall not fall within the zone labeled “Health Risks are LIKELY” as shown on figure 40. Preferably the weighted accelerations shall fall within the “Minimal Risk to Health” zone. For exposures lasting greater than 8.0 hours, the seat pan frequency weighted triaxial RMS accelerations shall not exceed 0.315 m/s^2 (see figure 40). If the weighted accelerations fall within the “Caution Zone”, a warning to occupants shall be provided indicating the potential health risk (see 5.7 for design of these labels).

Downloaded from http://www.everyspec.com

b. Category B: vibration with occasional shock or transient vibration. Triaxial acceleration data shall be processed in accordance with ISO 2631-1 using the basic evaluation method and the frequency weightings and multiplying factors for health. If the crest factor for the dominant vibration source is less than or equal to 9.0, or the criteria referenced in 5.5.5.1.2b do not suggest that additional evaluation methods should be considered, the limits shall follow the guidelines provided for Category A.

If the crest factor exceeds 9.0, or the criteria described in 5.5.5.1.2b suggest that additional evaluation methods be considered, the fourth power vibration dose method described in ISO 2631-1, or the multiple shocks method described in ISO 2631-5, or both shall be applied in addition to the basic method. The daily vibration exposure or equivalent continuous 8.0-hour exposure in any orthogonal direction shall not exceed an exposure limit value of 1.15 m/s^2. The seat pan vibration dose value in any orthogonal direction shall not exceed an exposure limit value of 21 $m/s^{1.75}$. The limits using the multiple shocks method shall follow the guidelines provided in Category C.

c. Category C: repeated/multiple shocks or transient vibration. The primary evaluation methodology and limits for this environment shall be in accordance with ISO 2631-5. For operational environments where impacts are less than or equal to 4.0 G, and for a general population (military or civilian), the resulting Equivalent Daily Static Compressive Stress (S_{ed}) or Spinal Stress Dose shall not exceed 0.5 Megapascals (MPa) for a low probability of adverse health effects at a lifetime exposure. If the resulting S_{ed} exceeds 0.8 MPa, there is a high probability of adverse health effects. For operational environments where impacts routinely exceed 4.0 G, and given a military-only population, the S_{ed} value shall be normalized over an 8.0-hour period and shall not exceed an $S_{ed}(8)$ value of 4.7 MPa, with a 3.9 MPa limit preferred, for a low probability of adverse health effects at a lifetime exposure.

Downloaded from http://www.everyspec.com

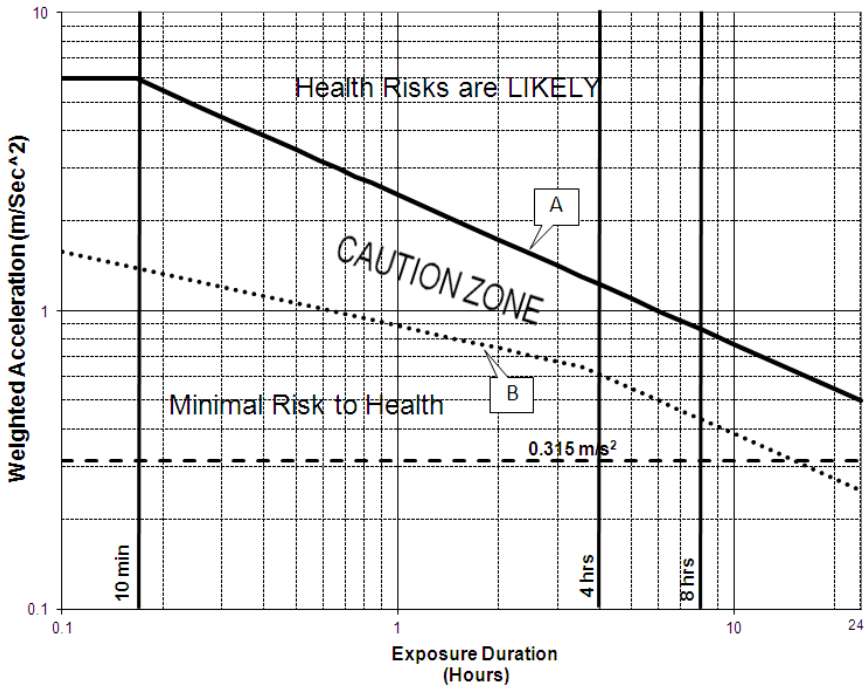

Exposure duration (hrs)	Weighted Acceleration (m/sec^2)	
	Curve A	Curve B
0.1667 (10 min)	6.00	1.39
1.0	2.449	0.89
3.5	1.309	0.65
4	1.225	0.63
6	1.0	0.5
8	0.866	0.433
15	0.632	0.316
24	0.5	0.25

NOTE:

1. Curve A represents the upper zone associated with Equation B.1 in ISO 2631-1, Annex B, Amendment 1. Curve B represents the lower zone associated with Equation B.2 in ISO 2631-1, Annex B, Amendment 1 up to 3.5 hours exposure duration, and represents the lower zone associated with Equation B.1 in ISO 2631-1, Annex B, Amendment 1 beyond 3.5 hours exposure duration.

FIGURE 40. Health guidance zones for limited exposures.

5.5.5.1.4 Performance. Triaxial acceleration data shall be processed in accordance with ISO 2631-1 using the basic method and the frequency weightings and multiplying factors for health. To minimize the degradation in task performance during vibration exposure, the vehicle design shall meet the following requirements:

a. Acceleration limits. The seat pan frequency weighted triaxial RMS accelerations in any orthogonal direction shall be limited to the zone labeled "Minimum Risk to Health" on figure 40.

Downloaded from http://www.everyspec.com

b. Frequency limits. Whole-body vibration shall be minimized in the frequency range below 20 Hertz where major body resonances occur. To preclude impairment of visual tasks, vibration between 20 and 70 Hertz shall be minimized. The transmission of higher frequency vibration through a seating system shall be minimized, especially where transmission of vehicle vibration to the occupant's head can occur.

5.5.5.1.5 Comfort. Triaxial acceleration data shall be processed in accordance with ISO 2631-1 using the basic method and the frequency weightings and multiplying factors for comfort. When considering the overall comfort of the occupant during exposure to vibration, the vehicle design shall meet the following requirements:

a. Acceleration limits. For environment Categories A and B, the vector sum of the seat pan frequency weighted RMS accelerations in the three orthogonal directions shall not exceed 0.315 m/s^2. Comfort levels have not been defined for Category C. Additional guidelines are given in ISO 2631-1 for including accelerations measured at other locations (seat back, foot support) in the assessment, particularly when significant levels of vibration are present.

b. Frequency limits. See 5.5.5.1.3b.

5.5.5.1.6 Sensation. Triaxial acceleration data shall be processed in accordance with ISO 2631-1 using the basic method and the frequency weightings and multiplying factors for sensation. In order to minimize the perception that the occupant is being exposed to vibration, the vehicle design shall meet the following requirements:

a. Acceleration limits. To minimize the human sensation of vibration, the vector sum of the frequency weighted RMS accelerations combined for all three orthogonal axes shall be below 0.015 m/s^2.

b. Frequency limits. See 5.5.5.1.3b.

5.5.5.1.7 Motion sickness. In order to minimize the potential for motion sickness, the vehicle design shall meet the following requirements:

a. Acceleration limits. To maintain a motion sickness rate of less than 10 percent sick, the motion sickness dose value (MSDV) shall be less than 0.3 $m/s^{1.5}$ determined by the method in accordance with ISO 2631-1, Annex D. This method only applies to limited duration exposures and does not account for adaptation that occurs for longer duration exposures.

b. Frequency limits. The method applies primarily when vibration conditions exist in the 0.1 to 0.5 Hertz frequency range for accelerations and angular velocities. These frequencies shall be avoided if possible.

5.5.5.1.8 Vehicle seating systems. Vehicle seating systems shall be designed to minimize the transmission of vehicle vibration and shock to the occupant. System resonances below 20 Hertz shall be avoided, but may be necessary to properly mitigate shocks in Category C environments. Seating systems shall also minimize vibration in the operational frequency range of the vehicle. Where visual performance is critical, higher frequencies at the seatback and headrest shall be avoided.

5.5.5.2 Building vibration. Buildings intended for occupation by personnel shall be designed/located to control the transmission of whole-body vibration. Guidance is given in ISO 2631-2.

5.5.5.3 Equipment vibration. Where whole-body vibration of the human occupant or parts of the body are not a factor, equipment oscillations shall not impair required manual control or visual performance.

5.5.5.4 Hand-arm (segmental) vibration.

5.5.5.4.1 Tool and equipment design. Tool and equipment design shall meet the following:

a. Segmental vibration limits. Tools, equipment, and process shall reduce human hand-arm exposures of segmental/hand-arm vibration to below 5.0 m/s as evaluated in accordance with ANSI S2.70.

b. Segmental vibration reduction through design. The design process shall consider segmental/hand-arm vibration and seek to minimize the creation of equipment vibration in order to do so.

c. Selection of low-vibration tools. Procurement guidelines shall specify low-vibration tools for all products used in support of DoD facilities and equipment.

Downloaded from http://www.everyspec.com

5.5.5.4.2 Health considerations. Design shall meet the following requirements:

a. Limits for segmental vibration. To minimize the effects of hand-arm vibration on health, the RMS value of the frequency-weighted translational accelerations shall not exceed the health guidance caution zones for the expected daily exposures defined by ANSI S2.70.

b. Minimization of segmental vibration. If possible, exposure within the health guidance caution zone (>2.5 m/s) shall be avoided.

c. Multiple shock vibration assessment. Vibration involving multiple shocks shall be assessed and minimized in accordance with ISO 5349-2.

5.5.5.4.3 Performance. The RMS value of the frequency-weighted translational acceleration shall fall below the health guidance caution zone for the expected daily exposures in accordance with ANSI S2.70. Measurements will be made in accordance with ISO 5349-2 and ANSI S2.70.

5.5.5.4.4 Protective equipment and work practice. Where protective equipment is used to reduce personnel exposures, only full finger gloves, certified by a third party as meeting anti-vibration criteria in accordance with ANSI S2.73/ISO 10819, may be used.

5.5.6 Stealth and covert operations. Systems and equipment for use in combat may require stealth for covert operations. The need for low-observable exterior and camouflage may preclude the use of brightly colored warning signs, warning lights, or auditory warnings. For such systems and equipment, techniques, such as barriers and interlocks, shall be used to ensure safe and effective operations.

5.5.7 G-loading. This section addresses the design considerations for ensuring crew health and performance during linear and rotational accelerations. The acceleration environments experienced during flight or other potential high-G environments have the potential to cause illness and injury, as well as affect crew performance. The effect of acceleration on crewmembers depends on the type (linear, rotational), duration (sustained, transient (see NOTE)), and direction with respect to the crewmember (through the head, chest, or shoulders) of the acceleration (see table XXVIII).

NOTE: Sustained accelerations, linear or rotational, are events with duration of greater than or equal to 0.5 seconds. Transient accelerations, linear or rotational, are events with duration of less than 0.5 seconds.

5.5.7.1 Terminology. The capital letter G is used to express inertial resultant to whole-body acceleration in multiples of the magnitude of the acceleration of gravity, $g = 9.80665\ m/s^2$.

TABLE XXVIII. Inertial resultant of body acceleration.

Linear motion	Physiologic descriptive	Physiologic standard	Vernacular descriptive
Forward	Transverse G, chest to back	+Gx	Eyeballs-in
Backward	Transverse G, back to chest	-Gx	Eyeballs-out
To the right	Lateral G	+Gy	Eyeballs-left
To the left	Lateral G	-Gy	Eyeballs-right
Upward	Positive G	+Gz	Eyeballs-down
Downward	Negative G	-Gz	Eyeballs-up

5.5.7.2 G-loading description. Table XXIX is a summary description of the combined human responses to specific sustained linear acceleration vectors in a relaxed, unprotected individual adapted to Earth's gravity. It shall be noted that the physiological effects described below depend on the onset rate (e.g., gradual onset <1.0 G/s; rapid onset 1.0 to 2.0 G/s; very high onset >6.0 G/s). The following are primarily derived from studies involving gradual onset exposures.

Downloaded from http://www.everyspec.com

TABLE XXIX. Physiological effects of sustained linear acceleration.

Effects of sustained +Gx acceleration (eyeballs-in)	
1.0 Gx	Slight increase in abdominal pressure; respiratory rate increases.
+2.0 to +3.0 Gx	Difficulty in spatial orientation; +2.0 G tolerable for at least 24 hours.
+3.0 to +6.0 Gx	Progressive tightness in chest and abdomen; cardiac rhythm disturbances; loss of peripheral vision; difficulty in breathing and speaking; blurring of vision, effort required to maintain focus; +4.0 G tolerable up to at least 60 minutes.
+6.0 to +9.0 Gx	Chest pain and pressure; shallow respiration from position of nearly full inspiration; decreased oxygen uptake during acceleration; pulmonary vascular pressures increase towards the dorsal part of chest and fall in alveolar pressure on the ventral part; arterial oxygen saturation falls below 85%, which can lead to cognitive impairment; further reductions in visual acuity and depth perception, increased blurring, occasional tunneling, great concentration required to maintain focus; occasional lacrimation (tears); body, legs, and arms cannot be lifted at +8.0 G; head cannot be lifted at +9.0 G; precise manual control compromised.
+9.0 to +12 Gx	Increased severity of symptoms; severe breathing difficulty, increased chest pain, marked fatigue, loss of peripheral vision, diminution of central acuity, lacrimation.
>+12 Gx	Extreme difficulty in breathing and speaking, severe viselike chest pain; loss of tactile sensation; total loss of vision possible.
Effects of sustained –Gx acceleration (eyeballs-out)	
All levels	Similar to those of forward acceleration with modifications produced by reversal of the force vector. Chest pressure reversed. Total body restraint system is critical and has a direct relationship with the ability to tolerate rearward acceleration exposures.
Effects of sustained ±Gy acceleration (eyeballs left/right) *little information available	
±1.0 to 2.0 Gy	Difficulty maintaining head and shoulders upright without restraints; difficulty of precise manual control.
±3.0 Gy	Discomfort after 10 seconds; pressure on restraint system; feeling of supporting entire weight on clavicle; inertial movement of hips and legs; yawing and rotation of head toward shoulder; petechiae and bruising; engorgement of dependent elbow with pain; total body restraint system is critical.
±5.0 Gy	Conjunctival hemorrhage has been reported; severe headache after exposure.
Effects of sustained +Gz acceleration (eyeballs down)	
+1.0 Gz	Equivalent to the erect or seated terrestrial posture.
+2.0 to +2.5 Gz	Increased weight; increased pressure on buttocks; drooping of face and body tissues.
+3.0 to +4.0 Gz	Heaviness in arms and legs intensify; dimming of vision; movement of the extremities becomes difficult.
+5.0 to +6.0 Gz	Legs swell, muscle cramps, labored breathing, along with a complete loss of vision. Total G-induced loss of consciousness (GLOC) typically occurs at +6.0 Gz or beyond. Following unconsciousness, cognitive and psychomotor function may take 55 seconds to recover.
>+6.0 Gz	Protection needed to preserve health.
Effects of sustained -Gz acceleration (eyeballs up)	
-1.0 Gz	Tolerable; sense of pressure and fullness in the head; congestion of eyes.
-2.0 to -3.0 Gz	Severe facial congestion; bradycardia; dysrhythmia; throbbing headache; blurring, graying, or occasional reddening of vision after 5.0 seconds; congestion disappears slowly; may leave petechial hemorrhages, swollen eyelids.
>-3.0 Gz	Red-out; mental confusion and unconsciousness.

5.6 Ground vehicles.

5.6.1 General. Handles, levers, pedals, knobs, and workspace dimensions shall be designed to enhance effective vehicle operation by suitably clothed and equipped users with relevant body dimensions varying between 5th and 95th percentiles (see 5.8.1).

5.6.2 Vehicle seating.

5.6.2.1 Dimensions and clearances. Vehicle operator seating dimensions and clearances shall be in accordance with figure 41, figure 42, and table XXX, as applicable.

5.6.2.2 Vertical adjustment. Vertical adjustment of a seat to a higher position shall also increase leg room and footrest angle.

5.6.2.3 Horizontal adjustment. Seats shall adjust at least 15 centimeters (6.0 inches) in the fore-aft direction.

Downloaded from http://www.everyspec.com

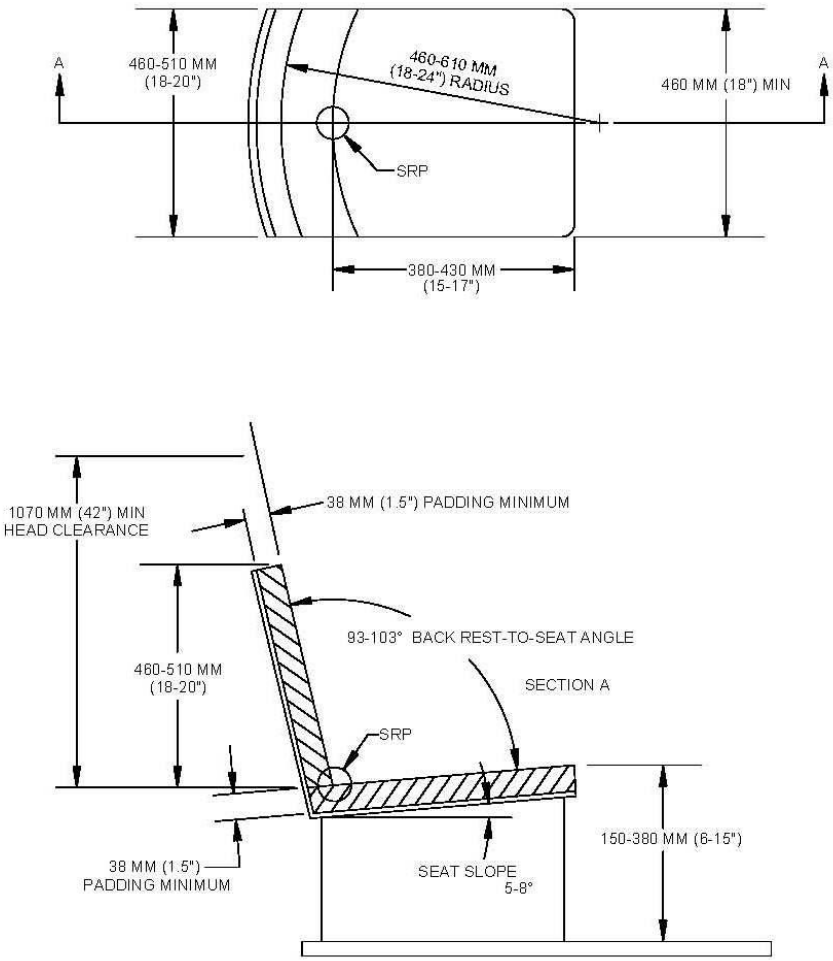

NOTE:

1. SRP = Seat Reference Point.

FIGURE 41. Dimensions for vehicle operator's seat.

Downloaded from http://www.everyspec.com

TABLE XXX. Recommended clearances around vehicle operator's station to accommodate a soldier dressed in arctic clothing.

A. Elbow (dynamic)	91 cm (36 in)
B. Elbow (static)	71 cm (28 in)
C. Shoulder	58 cm (23 in)
D. Knee width (minimum)	46 cm (18 in)
E. Knee width (optimum)	61 cm (24 in)
F. Boot (provide adequate clearance to operate brake pedal without inadvertent accelerator operation)	15 cm (6.0 in)
G. Pedals (minimum)	5.0 cm (2.0 in)
H. Boot (provide adequate clearance to operate accelerator without interference by brake pedal)	15 cm (6.0 in)
1. Head (seat reference point (SRP) to roof line)	107 cm (42 in)
2. Abdominal (seat back to steering wheel)	41 cm (16 in)
3. Front of knee (seat back to manual controls on dash)	74 cm (29 in)
4. Seat depth (SRP to front edge of seat pan)	41 cm (16 in)
5. Thigh (underside of steering wheel to seat pan)	24 cm (9.5 in)
6. Seat pan height	38 cm (15 in)
7. Boot (front of seat pan to heel point of accelerator)	36 cm (14 in)
8. Minimum mitten clearance around steering wheel	8.0 cm (3.0 in)
9. Knee-leg-thigh (brake/clutch pedals to lower edge of steering wheel)	66 cm (26 in)
NOTE: 1. See figure 42.	

Downloaded from http://www.everyspec.com

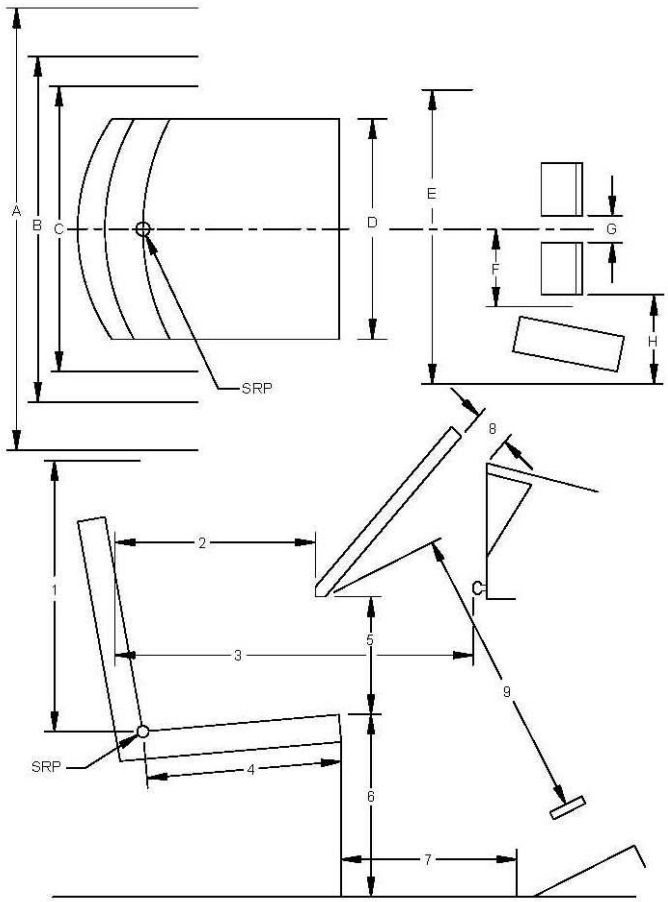

FIGURE 42. Measurements for clearances around equipment.

5.6.2.4 Back-rest angle. Back-rest angle shall not be more than 110 degrees from horizontal. If only the lumbar area is supported, the back-rest angle of tilt shall be 95 to 100 degrees for erect operators.

5.6.2.5 Seat padding. Seat padding shall be designed to support adequate blood flow to and from the legs. Seat padding shall be designed to preclude "pinching off" (by weight or pressure) of nerves. Seat padding shall be designed to provide protection from bruising. Seat padding shall be resilient enough to keep the operator's body from contacting the seat bottom during the loading environments predicted for the vehicle. Crashworthy seating requires crashworthy compliant cushions. Padding shall maintain effectiveness when subjected to environmental conditions (i.e., temperature, humidity, sand/dust, etc.).

5.6.2.6 Safety restraints. All administrative type vehicles shall have safety restraints. Safety restraints shall be installed on other type vehicles in accordance with operational requirements.

5.6.2.7 Head restraints. For occupant vehicles, the headrest shall be attached to the seat bucket so that it moves with the seat bucket during stroking of the energy absorption mechanism so as to support and protect the head. The headrest shall be contoured to provide energy absorption qualities to minimize whiplash injuries for the desired range of the expected, clothed, occupant population. The headrest cushioning material shall also be resilient, durable, comfortable, and will not lump during use. The headrest shall not interfere with the ingress or egress of an occupant wearing a back-type parachute.

Downloaded from http://www.everyspec.com

5.6.3 Vehicle controls.

5.6.3.1 Dynamic effects. Control use shall not be adversely affected by distortion, shock, or vibration of the vehicle.

5.6.3.2 Steering. In case of power steering assist failure, the steering gear shall afford the operator sufficient mechanical advantage to guide the vehicle during an emergency stop or during low-speed operation (see table IX).

5.6.3.3 Pedals. Foot pedals shall accept the weight of the operator's foot without initiating control action (see figure 21).

5.6.3.4 Control of hazardous operations. The operation of switches or controls which initiate hazardous operations shall require the prior operation of a locking control.

5.6.4 Vehicle operating instructions.

5.6.4.1 Provision of operating instruction. Operating instructions shall be provided for all vehicles and vehicle equipment, except where the operation will be obvious to all potential operators.

5.6.4.2 Format. Information shall be presented in the form of diagrams whenever possible.

5.6.4.3 Speed notice. Maximum permissible road speeds in each range shall be indicated. On vehicles for which all road speeds are limited by engine speed, a red line at the maximum engine RPM on the tachometer (if so equipped) may be used in lieu of a speed placard.

5.6.4.4 Shift handle positions. Operating positions of shift handles (such as those on transmission, power takeoff, winch-control, and transfer case mechanisms) shall be illustrated.

5.6.4.5 Control movements. Control movements shall be shown in planes parallel to the movement of the actual controls.

5.6.4.6 General labeling criteria. Symbols for automotive equipment shall be in accordance with 49 CFR 571.101.

5.6.5 Vehicle visibility.

5.6.5.1 Lateral visual field. The operator shall have forward visibility through a lateral visual field of at least 180 degrees and preferably 220 degrees.

5.6.5.2 Ground view.

5.6.5.2.1 Forward visibility. Truck design shall enable the operator, in the normal operating position, to view the ground starting at a minimum of 3.0 meters (10 feet) in front of the vehicle and continuing to all distances beyond. Mirrors or driver's vision enhancers (DVE) may be used to meet this requirement, if tactical requirements permit.

5.6.5.2.2 Upward visibility. Upward visibility shall extend to not less than 15 degrees above the horizontal.

5.6.5.2.3 Field restriction. The visual field restriction shall not exceed 20 degrees of subtends with one eye.

5.6.5.3 Rear view and mirrors.

5.6.5.3.1 Rear (vehicle). Side and rear enclosures shall be designed to permit the operator to view the rear of the vehicle (directly or by use of mirrors or DVE) in order to observe the load and to facilitate trailer attachment and backing maneuvers.

5.6.5.3.2 Rear view (road). A glare-proof, flat, elongated mirror and convex spotter-rearview mirror shall be provided on each side of the cab, located in such a manner as to afford the operator rearward vision from the normal operating position.

5.6.5.3.3 Adjustability. Mirrors shall be adjustable to afford the operators maximal rearward vision.

Downloaded from http://www.everyspec.com

5.6.5.3.4 Bracing. Mirrors shall be braced and clamped so that vibration will not blur the view.

5.6.5.3.5 Mirrors as handholds. If the mirror structure may be used as a handhold for entering the vehicle, or for maintenance operations, it shall be securely braced to prevent misalignment of the rearward view.

5.6.5.4 Glare.

5.6.5.4.1 Visors. Visors or other means shall be used to preclude performance degradation due to glare from external sources such as sunlight or headlights. Windshields or other transparent areas through which high acuity vision is required shall not be tinted or colored.

5.6.5.4.2 Interior surfaces. Interior surfaces shall be designed to reduce reflected glare into the driver's eyes or onto the windshield.

5.6.5.4.3 Interior displays. Interior displays shall be designed to reduce reflected glare into the driver's eyes or onto the windshield.

5.6.5.5 Windshields and windows.

5.6.5.5.1 Materials. Transparent materials selected for windshields and windows shall be shatterproof. Materials shall neither distort nor obscure vision.

5.6.5.5.2 Windshields. The critical visual area extends to, and often beyond, the vehicle's left corner post. It is better to use a narrow corner post (not over 50 millimeters (1.9 inches) wide) than to use a wraparound windshield, which may distort important visual areas. Door posts, windshield wiper motors, and other devices shall not obstruct vision.

5.6.5.5.3 Windows. Window designs shall meet the following:

a. General. In addition to the windshield area, closed-cab vehicles shall have at least one easily opened and closed glass or curtained aperture on each side of the driver's compartment. When possible, there shall be a rear window so that the driver can see out over the cargo bed.

b. Buses. Every bus that seats eight or more passengers shall have provisions for passengers to escape through the windows. Each push-out or other type of escape window shall be clearly identified by prominent, legible instructions, which include the simple steps to open the escape exit.

5.6.5.6 Windshield wipers and washers. Windshield wipers and washers shall be provided. Blades shall return to the stowed position when turned off. Stowed position of wipers shall not obstruct the driver's visual capabilities. Provision shall be made for manual operation in event of power failure. Wipers shall provide speed selection (intermittent setting) capability.

5.6.5.7 Lighting systems.

5.6.5.7.1 Headlights. Headlights shall provide choice of either upper (bright) or lower (dim) distribution of light. Headlights shall provide illumination to at least 150 meters (492 feet) of roadway in front of the vehicle or equipment under clear atmospheric conditions when the upper headlight beam is in use. Headlights shall provide measures to ensure that regular (bright or dim) headlights cannot be turned on when the blackout system is on.

5.6.5.7.2 Parking and side lights. Lighting systems in military vehicles and equipment shall include parking and side lights to indicate the location of the vehicle or equipment.

5.6.5.7.3 Tail lights. Lighting systems in military vehicles and equipment shall include tail lights to indicate the rear of the vehicle or equipment.

5.6.5.7.4 Brake lights. Lighting systems in military vehicles and equipment shall include brake lights to indicate the vehicle is stopping.

5.6.5.7.5 Turn signals. Lighting systems in military vehicles and equipment shall include turn signals to indicate the vehicle is turning.

Downloaded from http://www.everyspec.com

5.6.5.7.6 Instrument panel illumination. Lighting systems in military vehicles and equipment shall include instrument panel lights to illuminate the instruments.

5.6.5.7.7 Exterior lights. Lighting systems in military vehicles and equipment shall include exterior lights, such as spot lights, signal lights, blackout lights, stop lights and, in some cases, backup lights.

5.6.5.7.8 Reflectors. Side and rear reflectors shall be mounted between 0.6 meter (2.0 feet) and 1.5 meters (5.0 feet) above the ground. When reflectors are used on vehicles or equipment which have extending pods, arms, or other devices, the reflector shall remain visible when they are extended or in the stowed position.

5.6.5.8 Night operation.

5.6.5.8.1 General night operation. Indicators required by the vehicle operator during night operation shall be illuminated. The display luminance shall be adjustable from 0.1 to 3.5 cd/m² (0.03 to 1.0 footlamberts).

5.6.5.8.2 Blackout lighting systems. Blackout lighting systems shall meet the following:

a. Master switch. Blackout lighting systems, if required, shall be designed to preclude accidental operation of external lights and signals. To change the blackout switch to the normal modes, the operator shall have to perform some preliminary action (such as pushing a release button) so that activating the normal mode becomes a deliberate action. This is necessary to prevent enemy detection of military vehicles under blackout conditions.

b. Location of light source for operator visibility. If only one blackout light source is provided, it shall be mounted on the left-hand side of the vehicle, as far forward and aimed as near the driver's line of sight as practicable.

c. Beam criteria for operator visibility. On a level road, the blackout beam shall be 9.0 meters (30 feet) wide at a point 6.0 meters (20 feet) in front of the vehicle (decreasing in intensity from 6.0 meters (20 feet) to a point 30.5 meters (100 feet) in front of the vehicle) with the top of the beam directed at least one degree below the horizontal.

d. Marker lights. Blackout marker lights shall be in accordance with MIL-DTL-3976.

e. Concealment. Reflectors shall be readily concealable during blackout conditions.

5.6.5.9 Lighting for dark adaptation. When light security or NVD is not a consideration and dark adaptation is required, low level white lighting shall be used.

5.6.6 Vehicle heating and ventilation.

5.6.6.1 Heating.

5.6.6.1.1 General. The crew compartment shall be provided with a heating system capable of maintaining temperatures above 20 °C (68 °F) during occupancy when personnel are not wearing arctic clothing and exposure exceeds 3 hours. The heater shall achieve these requirements within one hour after the heater is turned on.

5.6.6.1.2 Controls. Cab heater controls shall be physically accessible to the operator and assistant operator.

5.6.6.1.3 Arctic conditions. When arctic clothing is worn, cab heaters shall be capable of maintaining a reference temperature of not less than 5.0 °C (41 °F) at the minimum ambient design temperature with the vehicle moving at two-thirds maximum speed and the defrosters operating at maximum capacity. The reference temperature is measured 61 centimeters (24 inches) above the seat reference point of each operator/passenger position.

5.6.6.1.4 Air temperature. Air temperatures around any part of the operator/passenger's body shall not vary more than ±5.0 °C (±9.0 °F).

5.6.6.1.5 Heater functionality. Heater functionality designs shall meet the following:

a. Exhausts. Any heater that uses oil, gas, liquefied petroleum gas, or any other combustible fuel for its operation shall discharge its exhaust products outside of the vehicle.

b. Location. Heaters shall be located or protected so that personnel cannot touch parts that are hot enough to cause burns (46 °C (114.8 °F)). The heater air inlet shall be positioned so it cannot ingest either engine or heater exhaust gases.

Downloaded from http://www.everyspec.com

c. Van heaters. Van heaters shall be designed so that they will not come apart, exposing parts (exhaust stacks, pipes, or conduits) if the vehicle overturns. Van heaters shall be fastened securely so they will stay in place during normal use or in case the vehicle overturns. It shall be possible to replace igniters, resistors, and other "high-mortality" items without having to remove the heater from the vehicle.

5.6.6.2 Ventilation.

5.6.6.2.1 General. Outside fresh air shall be supplied at minimum rate of 0.57 m^3 (20 ft^3)/min/person.

5.6.6.2.2 Hot climate operation. Air flow rates for hot climate operation (temperatures above 32 °C (90 °F)) shall be maintained between 4.2 and 5.7 m^3 (150 and 200 ft^3)/min/person unless air conditioning or individual (microclimate) cooling is provided.

5.6.6.2.3 Air velocity. Air velocity at each person's head location shall be adjustable either continuously or with not less than three settings (OFF, LOW, and HIGH) from near zero to at least 120 meters (400 feet)/minute.

5.6.6.3 Visibility. The heating-ventilating system shall be designed to minimize degradation of visibility due to frosting or misting of the windshield.

5.6.6.4 Air conditioning. If a vehicle mission profile requires personnel to occupy a vehicle cabin for a period exceeding 30 minutes in climatic (ambient) conditions greater than +24 °C (75 °F), then the provisions of 5.5.2.1.4 shall apply.

5.6.7 Automotive subsystems.

5.6.7.1 General.

5.6.7.1.1 Automotive drain valves. Automotive drain valves shall meet the following:

a. Vehicles shall be designed to require a minimum number of drain valves, drain sizes and drain plug sizes.

b. Vehicles that swim shall be equipped with bilge pumps.

c. Drain valves shall be readily accessible, dependable, and hand-operable by the full range of user personnel wearing either arctic or CBRNE garments.

d. Drains shall be located where crewmembers can clear and check them easily. Drains shall be easy to identify and to close and check before fording or swimming operations.

5.6.7.1.2 Mounting. Drains in the vehicle shall remain flush to the surface in which they are mounted, in both the ON and OFF position, so they do not interfere with the loading, stowage, or unloading of cargo.

5.6.7.1.3 Labeling. Instruction plates, giving drain and vent locations and procedures for operating them, shall be provided.

5.6.7.1.4 Operation. Drain valve handles shall be in line with the corresponding pipe when ON and perpendicular to the pipe when OFF.

5.6.7.1.5 Fluids. Drains shall be designed so as to empty lubricants and hydraulic fluids completely onto the ground or into a suitable container. Fluids shall drain to the outside of the vehicle, without falling on obstructions or splashing onto vehicle components.

5.6.7.1.6 Filters. Fuel and oil filters shall be located in accessible positions for inspection and replacement. Fuel and oil filters shall not require the removal of other parts.

5.6.7.1.7 Filling, draining, and checking procedures. Filling, draining, and checking procedures shall meet the following:

a. Dipsticks. Items such as the engine, transmission, and hydraulic reservoir sumps shall be equipped with dipsticks to determine fluid levels. Dipsticks shall be etched, sandblasted, knurled, or phosphate-coated to facilitate determination of the fluid level. Other items such as gear cases, differentials, and reservoirs which contain oil shall be equipped with either dipsticks, check plugs, or sight glasses, as appropriate. Each pump enclosure shall be fastened within the housing.

Downloaded from http://www.everyspec.com

b. Adjustment and access. Components requiring adjustment or replacement, such as distributors, fuel injectors, and fan belts, shall be as accessible as possible. Timing marks and other adjustment indicators shall be designed to minimize parallax and shall be readily accessible for visual inspection. Drive belt tensioning devices shall permit access for tensioning without removal of other components and, if needed, furnished with pry points.

5.6.7.2 Batteries.

5.6.7.2.1 Battery compartments. Batteries shall be located away from sources of heat and be environmentally protected to ensure satisfactory functioning within all ambient temperature ranges. Adequate compartment space shall be provided around the batteries for the placement of insulation or heating pads when winterizing the equipment.

5.6.7.2.2 Holders. Battery holders shall be rugged and have easily operated (without tools) clamping devices to firmly hold the battery in position against all vibration, vehicle motions, and gunfire shocks.

5.6.7.2.3 Mounting racks. Under-the-hood mounting racks for batteries shall be placed within the 5th percentile functional reach (see Appendix B), with the hood open. If such access by reach is not feasible, corrosion resistant roll-out racks (or similar devices) shall be provided.

5.6.7.2.4 Partitions. Whenever both the battery and the fuel tank are under the driver's seat, they shall be partitioned from each other. Both compartments shall have separate covers, ventilation, and drainage to the outside.

5.6.7.2.5 Receptacles. When a slave receptacle is required, the following conditions shall be applicable:

a. Installation on the exterior of the vehicle (or equipment) as near as possible to the battery enclosure.

b. Accessibility from ground level to all personnel.

c. Location away from areas where fuel or other explosive vapors are present.

5.6.7.2.6 Access. Complete freedom of access for replenishing the electrolyte, seeing into the filler opening, and testing the specific gravity and voltage shall be provided. Use of loose filler caps shall be avoided whenever possible. If the cover is hinged, there shall be enough clearance to open the cover.

5.6.7.2.7 Maintenance. Battery access covers shall be fastened with quick-release fasteners and insulated on the inside of the cover to prevent cable shorting if accidentally loosened. Batteries and their compartments shall be designed so they can be cleaned and serviced without removing any other components. Batteries shall be capable of rapid and easy removal by one person for servicing or replacement without removing other items of equipment or without requiring special tools.

5.6.7.2.8 Battery acid. Battery supports, hold-downs, and areas around the installation which could possibly be affected by dripping or seepage of acids shall be protected with acid-proof paints or coatings. Battery cases shall be drained overboard with acid-proof piping when required. Environmentally approved containers shall be used to capture the drained fluid.

5.6.7.2.9 Cables. Wherever the starter cable passes through a metal part, it shall be insulated with an acid-proof and waterproof bushing to prevent grounding.

5.6.7.2.10 Battery terminals. Dust caps shall be provided so that terminals cannot contact metal surfaces during handling, removal, or replacement. Positive and negative battery terminals shall be of different sizes to prevent incorrect cable attachment. Terminals shall be appropriately labeled "+" or "-".

5.6.8 Trailers, vans, and intravehicular connections.

5.6.8.1 Intravehicular coupling device.

5.6.8.1.1 General. Coupling devices shall be long enough so that they do not restrict the maneuverability of towing vehicles during towing operations. Coupling devices shall be designed to preclude mismating and damage under normal use.

5.6.8.1.2 Intravehicular safety. Suitable measures shall be employed to protect intravehicular couplings from accidental disconnection, kinking, entanglement, dragging, abrasion, or pinching during operation.

Downloaded from http://www.everyspec.com

5.6.8.1.3 Air and hydraulic brakes. Vehicles with air-over-hydraulic brakes or air brakes shall have provisions at the front and rear for connecting to another vehicle's brake system and controlling it during towing operations.

5.6.8.2 Trailers.

5.6.8.2.1 Brake controls. Brake controls shall not be located on the side of the trailer exposed to road traffic. Trailer brake controls shall be located so that an operator can reach them while restraining or positioning the trailer manually.

5.6.8.2.2 Positioning controls. Component trailers shall contain precise positioning controls when the trailer will be used to mate parts.

5.6.8.2.3 Tie downs. Munitions tie-down facilities on trailers for stores shall be easily installed and removed.

5.6.8.3 Brakes.

5.6.8.3.1 Use. Brake use shall meet the following:

a. Dual braking systems. There shall be two independent means available to the operator for applying vehicle brakes.

b. Parking brake. One such means shall be an auxiliary parking brake.

c. Operational independence. If the two brake systems are not completely independent, the design of the system shall be such as not to degrade one braking system should the other system fail.

d. Air brakes. The design of air or vacuum braking systems for any surface vehicle shall provide full braking capability with or without the engine operating.

e. Towed vehicles. Every vehicle used to tow another vehicle with full air brakes shall have a means of activating the towed vehicle's brakes.

5.6.8.3.2 Parking brakes. Manual parking brake controls for trailers shall be located so that an operator can reach them easily after positioning or parking the trailer. The controls shall not be located on the side of the vehicle normally exposed to road traffic.

5.6.8.3.3 Brake warning. Brake warnings shall meet the following.

a. Air brakes. Vehicles with compressed air brakes shall have warning signals that operate continuously as long as pressure is below a fixed threshold level (not less than one-half the cut-out pressure of the compressor governor). These warnings shall be designed so they are audible or visible to the operator. In addition, each vehicle shall have a pressure gauge which indicates the braking pressure.

b. Vacuum brakes. Vehicles with vacuum brakes shall have an audible or visible warning signal which gives a continuous warning as long as the vacuum in the supply reservoir is less than 200 millimeters (7.87 inches) of mercury. In addition, each vehicle shall have a vacuum gauge indicating the braking vacuum.

5.6.8.3.4 Brake maintenance. All brake system components requiring maintenance action shall be both visible and accessible to maintenance personnel and operators. All parts of the brake assembly, drums, discs, shoes, cylinders, support plates, and housing mechanisms shall be quickly and easily removable, renewable, and repairable. Appropriate inspection ports, protected by a window or removable cover, shall be provided to permit examination of brake linings.

5.6.8.3.5 Glad hands. Glad hands shall meet the following:

a. Mounting of glad hands. Where service and emergency air brake components are installed on the front or rear of equipment, the glad hands shall be rigidly mounted with service glad hand on the curb side and emergency glad hand on the road side.

b. Identification tags. Each glad hand shall be equipped with permanent and clear identification tags.

c. Dust covers. A spring-type, metal dust cover shall be installed on each glad hand to prevent contaminants from entering the opening.

Downloaded from http://www.everyspec.com

d. Color-coding. Color-coding for glad hands, when specified by the procuring activity, shall be blue for service/control, and red for emergency/supply.

e. Check valves. Every air or vacuum reservoir shall have a check valve so that leakage from the air or vacuum supply lines will not deplete the reservoir. Means shall be provided to determine that the check valve is in working order.

5.6.8.3.6 Brake adjustment. Brakes shall be adjustable without using special tools (including wheel pullers) or removal of any part. Adjustments required to tighten brakes shall be clearly marked as to proper rotation or action when operation is not obvious. Self-adjusting brakes are both a desirable and acceptable design feature provided that brake adjustment cannot be changed inadvertently and that actual brake system data prove the self-adjustment system to be effective.

5.6.8.4 Tires.

5.6.8.4.1 Spare tires. The spare tire shall be capable of being inflated and checked when mounted in the stowed position. The spare tire and the tools for servicing it shall be readily accessible and simple to operate. A 5th percentile woman in size and strength (see 5.8) shall be able to jack up the vehicle, remove the spare tire/wheel assembly from its stowed location, remove the damaged tire/wheel assembly, install the spare tire/wheel assembly onto the vehicle, tighten the nuts to the required torque to secure the spare, and stow and secure the damaged tire using on-equipment material (OEM) tools and equipment. It shall be possible to remove and replace the spare tire with the vehicle fully loaded. When there is no spare tire, the vehicle shall have a “limp home” device (to temporarily take on the function of the damaged tire) that will permit it to continue traveling for 80 kilometers (50 miles) after the failure.

5.6.8.4.2 Tires for air-over-hydraulic brake systems. Vehicles with air-over-hydraulic brake systems shall have a pneumatic outlet and pressure gauge for adjusting tire pressures. The air hose for pneumatic outlet shall be long enough to reach all the tires, including the spare, from the air compressor on the same vehicle or another vehicle. It shall be possible to inflate and check the spare tire with a standard air gauge without removing the spare from its mount.

5.6.8.4.3 Dual tires. The design of dual wheel arrangement shall allow both the inner and outer tires to be inflated and checked for air. The location of valves shall permit tires to be inflated and checked when the tires are interchanged.

5.6.8.5 Fuel system.

5.6.8.5.1 General fuel system design. General fuel system designs shall be in accordance with the following:

a. Markings. The capacity of the fuel tank shall be clearly marked on the tank.

b. Fill time. Tactical and combat vehicle fuel tanks that hold 190 liters (50 gallons) or more shall be able to accept fuel at 190 liters per minute (50 gallons per minute). Tanks that hold less than 190 liters (50 gallons) shall accept fuel fast enough to be filled in one minute.

c. Drains. The fuel tank drain plug shall be located so that the fuel tank can be drained completely. Personnel shall be able to remove the drain plug with OEM.

d. Filters. Fuel filters that are accessible and easy to clean shall be provided.

e. Replacement of fuel pump. The replacement of fuel feed pumps shall be accomplished as simply as any other roadside repair. If this is not possible, an alternate fuel supply system shall be considered.

f. Fuel feed lines. The fuel system shall be constructed so gravity or siphoning cannot feed fuel directly to the carburetor or injectors.

g. Maintainability. The operator shall be able to remove the air intake pipe on the carburetor easily.

5.6.8.5.2 Safety features of liquid fuel tanks. Safety features of liquid fuel tanks shall be in accordance with the following:

a. Tank location relative to front axle. As a precaution, in case of collision, the vehicle’s fuel tank shall not be forward of the front axle.

Downloaded from http://www.everyspec.com

b. Tank location relative to passengers. The fuel tank and fuel filler pipe shall not be inside or over parts of the vehicle that carry the crew or passengers.

c. Tank location relative to width (a) and width (b). The tank, its intake pipe, or its supports shall be located slightly inward of the overall width and not project beyond the vehicle's overall width.

d. Tank spillage in roll-over. The tank shall be designed so that if the vehicle turns over, fuel will not spill out faster than 30 milliliters (1.0 fluid ounce) per minute.

e. Fuel flow restrictor. When fuel is forced from the tank with pressure devices, there shall be a safeguard (excess-flow valve) to stop the flow of fuel if the fuel feed line breaks.

f. Tank air vent. Every fuel tank shall have a non-spill air vent. It may be mounted separately, or combined with the filler cap. The non-spill air vent shall be above water during vehicle swimming operations.

g. Fill pipe. The nozzle opening in the fuel fill pipe shall be located to minimize the likelihood of spilling fuel on the exhaust system, the battery, or inside the vehicle. The nozzle opening in the fuel fill pipe shall never be more than 1.2 meters (4.0 feet) above the ground or the base of the work platform used for refueling.

5.6.8.6 Engine. Engine designs shall provide easy access for maintenance.

5.6.8.6.1 Engine accessories. Engine accessories shall meet the following:

a. Fuel and coolant pumps, starter motors, generators, filters, and other engine accessories shall be accessible without removing the engine from the vehicle.

b. It shall be possible to replace any engine accessory without removing more than one other engine accessory.

c. Fuel and oil filters shall be located where they can be cleaned and replaced without disassembling the engine from the chassis and without first removing engine accessories such as starters, generators, pumps, or manifolds.

d. Air cleaners shall be located where they are easy to remove, service, and install using OEM tools and equipment.

e. Crankcase sumps shall be easy to remove.

f. Fan belts and other drives that require adjustment shall be designed to be handled while wearing arctic mittens and located to provide easy, safe access away from heat sources such as hot manifolds.

g. Spark plugs shall be accessible. They shall be removable with OEM tools and equipment. Ignition system wiring shall be mounted and routed so vehicle vibration or personnel movements cannot break connections accidentally.

h. Engine timing marks shall be located so as to be easily cleaned and viewed by a technician. Engine timing marks shall have a visible reference point on the engine so that the timing can be checked when the engine is installed in the vehicle.

5.6.8.6.2 Fuel system drains. Engines that use diesel or multi-fuels shall be designed so that it is easy to drain the primary fuel filter daily. Drains shall be located to direct their flow onto the ground, rather than on equipment.

5.6.8.6.3 Oil-drain plugs. Removing oil-drain plugs shall allow the pan to drain completely if the vehicle is on a level surface.

5.6.8.6.4 Throttles. Engines used as electric or pneumatic power sources and vehicular engines on radio-carrying vehicles shall have a tachometer and throttles which can be locked at selected part throttle positions. Vehicles shall be equipped with over-speed governors that are tamper proof.

5.6.8.6.5 Air restriction gauge. Air restriction gauges, if required, shall be placed where they are visible to the operator of the vehicle.

Downloaded from http://www.everyspec.com

5.6.8.7 Radiators.

5.6.8.7.1 General. The radiator filler neck shall be large enough to accept existing filler nozzles. The radiator filler neck shall be positioned so that the operator can see the fluid level inside the radiator. An accessible drain shall be in the lower tank of the radiator to drain it completely onto the ground or into a suitable container without splashing on vehicle parts. It shall be possible to remove the radiator without removing the engine. A guard shall be provided to protect the radiator during travel through brush and during actions.

5.6.8.7.2 Tubes and hoses. Radiator coolant tubing and hoses shall be designed, constructed, and installed to ensure continued functioning in all environments. Radiator coolant tubing and hoses shall be sufficiently long and flexible to accommodate all normal motions of the parts to which they are attached without damage. Radiator coolant tubing and hoses shall be secure from chafing, kinking, or other damage. Radiator coolant tubing and hoses shall be mounted with airplane-type clamps which are accessible to the operator.

5.6.8.8 Exhaust systems.

5.6.8.8.1 General. The design shall keep fumes from entering crew and other personnel compartments. Exhaust gases shall be deflected away from tires, roadways, and the ground so as not to damage vehicle components, disturb roadway dust, or cause brush or grass fires.

5.6.8.8.2 Location. The exhaust system shall be located or protected so that personnel will not come into contact with hot surfaces.

5.6.8.8.3 Environmental considerations. The exhaust system shall not be capable of being clogged or its function degraded when the vehicle is either operating on a muddy surface or engaged in swimming operations.

5.6.8.8.4 Exhaust system drains. Gravity draining of the exhaust system shall be provided so that it will drain completely when the vehicle is on level ground.

5.6.8.8.5 Mounting. The exhaust system shall be mounted to the chassis securely, yet loosely enough so that flexing between components will not cause damage.

5.6.8.8.6 Safety. The exhaust system shall not cause burning, charring, or other damage to the vehicles electrical wiring, the fuel supply, or any other equipment.

5.6.8.8.7 Mufflers. The exhaust system shall include mufflers (silencers) to limit the noise to which any occupant is exposed to in accordance with noise levels in MIL-STD-1474.

5.6.8.9 Chassis.

5.6.8.9.1 General chassis design. Cabs and bodies shall be easy to remove. Heavy cabs shall be provided with lifting points, which are properly marked (LIFT HERE).

5.6.8.9.2 Chassis components. The skirting plates, track guards, and mud flaps shall be easy to remove and be capable of preventing rocks and other debris from being thrown against the crew, passengers, or other personnel in the immediate vicinity. Suspension units and final drives shall be removable under field conditions. Replacement parts shall be bolted, not riveted or welded, to the frame.

5.6.8.9.3 Chassis alignment. Standard devices for checking chassis alignment shall be provided at accessible positions and shall be suitably marked.

5.6.8.9.4 Track installation and adjustment. The installation and adjustment of tracks shall not require the use of special jacks or tensioners to pull out slack in the track.

5.6.8.9.5 Bumpers. Bumpers shall be of standard proportions, located at standard height within the vehicle class, and be rugged and sufficiently strong for towing with the vehicle loaded. Appropriate towing attachments shall be provided on the bumper.

Downloaded from http://www.everyspec.com

5.6.8.9.6 Accessibility. Hoods and other access panels which must be opened for daily checks shall be accessible and operable by a single operator (see 5.8). Cab tops, tarpaulins, and curtains shall be protected from chafing and flapping. Tarpaulins and end curtains shall be fire resistant. The cab of a vehicle shall be designed so that one member of the crew can convert it from open to closed configuration and vice versa in 10 minutes or less (times do not apply to arctic enclosures).

5.6.8.9.7 Cargo vehicle. Tarpaulins, end curtains, and bows shall be designed so that two crewmembers can remove or install them in 10 minutes or less (times do not apply to arctic enclosures). When cargo vehicles are used for troop transport or workspace, there shall be between 1.5 and 1.9 meters (5 to 6.3 feet) of clearance between the tarpaulins and bows covering the bed and cargo floor. One crewmember shall be able to gain access to the cargo compartment within three minutes, from front or rear, with the tarpaulin and curtains in place.

5.6.8.9.8 Removal of tarpaulin. Tarpaulin removal shall meet the following:

a. Tarpaulin bows and ropes shall be easy to unfasten.

b. Pins and other retaining devices shall be designed so two crewmembers, wearing trigger finger mittens, can remove and replace the pins and other retaining devices.

c. Bows shall be designed so that personnel wearing gloves can remove them from sockets under wet, muddy, or freezing conditions.

d. Tarpaulin and cab-top bow sockets shall have adequate drain apertures.

e. There shall be a provision for rolling up the sides of cargo area tarpaulins to ventilate the area occupied by personnel.

5.6.8.9.9 Safety. Vehicles that transport troops shall have safety straps at the rear of the vehicle.

5.6.8.9.10 Stowage. There shall be space to stow stakes and bows on the vehicle.

5.6.8.9.11 Retaining pins and devices. Pins and other retaining devices shall have the maximum working clearances that still assure they will be retained properly. Chains shall be used with retaining pins and other similar devices to prevent loss of these items.

5.6.9 Vans and transportable enclosures. The following criteria applies to trailer vans and transportable enclosures that serve as shelters for personnel or equipment, and which require occupancy by personnel for operational or maintenance tasks in excess of one hour, on a recurring basis where mission requirements permit.

5.6.9.1 Ceiling height. The ceiling height (distance from the floor to the bottom of any light, cable run, or other protuberance over the aisle or standing work space) shall be not less than 198 centimeters (78 inches) for vans and shelters, except as follows: when the occupants seldom stand to perform normal operations, the ceiling height can be reduced to 189 centimeters (74.5 inches) unless otherwise specified by the procuring activity (see 6.2).

5.6.9.2 Access openings. Personnel access openings shall be not less than 193 centimeters (76 inches) high and 76 centimeters (30 inches) wide. Equipment access openings shall accommodate the specific equipment to be transported, including suitable clearances for handling.

5.6.9.3 Access doors. Access doors shall have provisions for being locked in open positions as well as closed positions. All access doors shall have inner quick-opening releases.

5.6.9.4 Steps, stairs, ladders. Steps, stairs, or ladders shall be provided when van floors are more than 46 centimeters (18 inches) above ground level (see 5.11.1).

5.6.9.5 Inclinometers. On work spaces, such as large personnel-occupied vans or shelters, intended for use as mobile work spaces, inclinometers shall be provided to permit readout of front-rear and side-side tilt within ±2.0 degrees.

Downloaded from http://www.everyspec.com

5.6.10 Ladders for trailers and vans.

5.6.10.1 General. Ladders shall be used whenever personnel have to change elevation abruptly (more than 400 millimeters (16 inches)) during operation or maintenance of the vehicle. The designer shall take into consideration spatial limitations and clearances, weather conditions affecting the use of a ladder (rain, ice, snow), and traffic flow. When operational vans will remain in one place for an extended period of time, stair ladders shall be used. Ladder selection shall be based on the required structural strength of the ladder relative to the required slope of the ladder.

5.6.10.2 Accommodation. Ladders shall be of sufficient width to accommodate arctic boots. Ladders shall be designed to support the weight of a 95th percentile male dressed in arctic clothing plus the weight of any additional equipment that he may be wearing or carrying.

5.6.10.3 Safety measures. Ladders shall have no obstructions, edges, notches, or burrs which could injure personnel or damage hoses or cables. Surfaces upon which personnel step or walk shall be nonskid (expanded metal). Ladders shall lock in place during use. Markings shall be provided indicating any dangers associated with using the ladder.

5.6.10.4 Lifting and positioning. Wherever possible, ladders shall be capable of being carried, handled, and positioned by one person. However, ladders shall never require more than two people to carry. If one person must lift and stow a ladder manually, the ladder's weight and lift distance from ground level shall not exceed 11.3 kilograms (25 pounds) for 1.52 meters (5.0 feet), or 9.0 kilograms (20 pounds) for 1.83 meters (6.0 feet).

5.6.11 Cranes, materials handling, and construction.

5.6.11.1 General. The positioning of equipment and loads shall be facilitated through the use of center-of-gravity identification, matching guidelines, identification of attaching points, detachable probes, and similar measures.

5.6.11.2 Control lever latches. Latches on control levers shall not cause delay in operation.

5.6.11.3 Control labels. All controls used with lifting equipment shall be labeled as to function and direction of movement.

5.6.11.4 Control placement. Controls shall be within easy reach of the operator and shall afford optimum visibility of the load at all times.

5.6.11.5 Foot-operated controls. Foot-operated controls shall not be selected for precise adjustments or movements. Foot-operated brake pedals that require locking shall lock by foot action alone. The pedals shall rise from the depressed position in a backward as well as vertical movement.

5.6.11.6 Load capacity. The load capacity shall be indicated on the equipment. Audible warning devices shall be provided where necessary to indicate that the allowable load has been exceeded.

5.6.11.7 Visibility. Maximum, unobstructed view of the work, including the point sheaves of the basic boom of a revolving crane at a 3.0-meter (10-feet) radius shall be visible to suitably clothed and equipped users with relevant body dimensions varying between 5th and 95th percentiles.

5.6.11.8 Access. Where not otherwise specified herein, access dimensions for construction machinery shall be in accordance with SAE-J925, as applicable.

5.6.11.9 Handholds and footholds. Suitable handholds and footholds shall be provided to facilitate personnel access and movement.

5.6.11.10 Handling equipment.

5.6.11.10.1 Forklifts. The configuration of forklift mechanisms and forklift truck cabs shall permit the operator to have direct view of the tips of the forks in all typical modes of material loading and in all likely operator positions.

Downloaded from http://www.everyspec.com

5.6.11.10.2 Jacks. Jacks shall be designed so they can be transported, handled, and stored easily. Small jacks, that one person must lift and carry, shall not weigh more than 18 kilograms (40 pounds). Jack handles shall be designed so they can be removed or folded when the jack is not in use. Jacks shall be labeled to indicate the direction to turn the jack handle for raising and lowering, and the load they are designed to carry. Jacking points shall be conspicuously labeled on equipment. On hydraulic jacks, there shall be mechanical safety-locking devices to keep the load from falling if the hydraulic system fails. Only nonflammable hydraulic fluid shall be used in jacks.

5.6.11.10.3 Winches. Instruction plates describing winch operation shall be mounted in a conspicuous location for operator use. Winch and vehicle power trains shall be capable of being operated simultaneously. The vehicle forward speed due to straight winch-line or snatch-block operation shall match one of the vehicle power train speeds to facilitate simultaneous operation. Winch cables shall be capable of being easily paid out by one crewmember. Winches shall be capable of being operated from both cab and winch locations and being observed by the operator during operation. Winch controls at the winch shall be capable of being operated by personnel wearing arctic mittens.

5.6.11.11 Hoists. Hoists shall have an automatic cutoff of power to stop lifting when a bind occurs. Moving parts such as belts, chains, and gears shall be covered to prevent personnel from accidentally coming in contact with them. The hoist control box shall be lightweight and designed to be hand-held so the operator may reach the "up" and "down" control while holding the box securely and comfortably. Where a push button control is used, it shall be spring-loaded to the "off" or "stop" position and recessed. The "up" and "down" hoist controls shall be clearly labeled, preferably on the control.

5.6.11.12 Hydraulics. Hydraulic systems are used in tractor and earth-moving equipment. Where practical, valves and cylinders, hose assemblies, couplings, fittings, and filters shall be standardized. Hydraulic systems are used to provide power for braking and for other applications in which an intermittent high amplitude impulse of power is needed. The advantage of the hydraulic system is that effective power may be stored by a small pump over a long duty cycle and expended in a short duty cycle impulse of high power. For safety purposes, only nonflammable fluid shall be used.

5.6.11.12.1 Standardization. Connectors in hydraulic systems shall be of standard design and able to be handled with standard tools. Where practical, valves and cylinders, hose assemblies, couplings, fittings, and filters shall be standardized. Standard hardware shall be used for mounting hydraulic components. All connectors shall be standardized by content of lines. The number of different sizes shall be held to a minimum. If there is danger of mismating connectors for adjacent lines carrying different fluids, physically incompatible connectors for the two lines shall be specified.

5.6.11.12.2 Identification. Color-coding shall be used for hydraulic lines and valves at each end of the line. Permanent identification, instruction markings, periodic inspection dates, and drain schedules shall be provided. Inlets, outlets, and connecting lines in hydraulic systems shall be identified at least every 460 millimeters (18 inches), and at both ends, to facilitate maintenance.

5.6.11.12.3 Hydraulic system drain cocks. Drain cocks with high draining rates shall be fitted to all air receivers and oil reservoirs. All drain cocks shall be readily accessible and hand operable without spillage onto gloves by the full range of user personnel wearing arctic and chemical protective garments. Drain cock handles shall be in line with the corresponding pipe when ON and perpendicular to the pipe when OFF. On vehicular equipment vertical drain cocks shall be operable only by upward movement of the handle. On horizontal lines, the handle shall be on top or bottom of the line. If a horizontal line must have a handle on the side of the line, it shall be operable only by upward movement.

5.6.11.12.4 Seals for hydraulic system drain cocks. Seals shall be externally visible after they are installed (see figure 43). Seals shall not protrude or extrude beyond the coupling since protruding seals are chipped and shredded by vibration or contact, and the damage spreads internally to destroy sealing power and deposit pieces in the line. For low-temperature operation, special low-temperature materials shall be used. Couplings which utilize permanent seals rather than those which are replaceable shall be specified.

Downloaded from http://www.everyspec.com

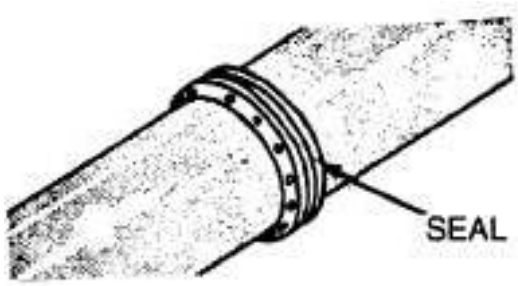

FIGURE 43. Visible seals.

5.6.11.12.5 Design considerations for hydraulic systems. Hydraulic systems design shall make use of the following considerations:

a. All lines for hydraulic systems shall be secured and free from accidental damage.

b. Mechanical stops shall be provided for valve handles to prevent the valves from opening because of vibration.

c. Positive locking A-end pumps shall be provided when in the traveling position.

d. Self-sealing couplings shall be provided on complex hydraulic and pneumatic systems.

e. Hydraulic pumps, valves, and lines, as well as other parts of hydraulic systems, shall be designed in accordance with SAE-J1689.

f. The use of armor-covered flexible hose shall be considered for hydraulic lines to facilitate replacement in the field from bulk stock.

g. Aircraft-type safety fittings with built-in check valves shall be used in hydraulic lines to limit fluid loss in the event of a line rupture.

h. Automatic bleeding of hydraulic systems shall be utilized whenever possible.

i. Relief valves shall be used in hydraulic lines to prevent their bursting and injuring personnel.

j. Quick-release fastening devices shall be used on connections that require frequent disconnection.

k. Self-sealing features shall be provided to prevent leakage of fluid when disconnect is made.

l. Shock-proof pressure gauges shall be used on all mobile equipment.

m. Gauges shall be selected that have an external pointer adjustment for ease of adjustment and calibration.

n. Meters, gauges, and control valves shall be placed in a centralized position.

o. Valves with integral limit switches shall be used where practicable.

p. Permanent or cartridge-type filters shall be used.

q. In case of electrical failure, a means for manually operating hydraulic systems shall be provided.

r. The connector arrangements shown on figure 44 shall be used.

s. To prevent fluid spraying or draining onto the technician or nearby objects when fluid lines are disconnected during maintenance, the following design recommendations shall be used:

(1) Provide line drains to ground or container at low level access points.

(2) Reposition line disconnects from sensitive components or shield the component.

(3) Provide a high visibility warning light at disconnect areas which are especially critical.

Downloaded from http://www.everyspec.com

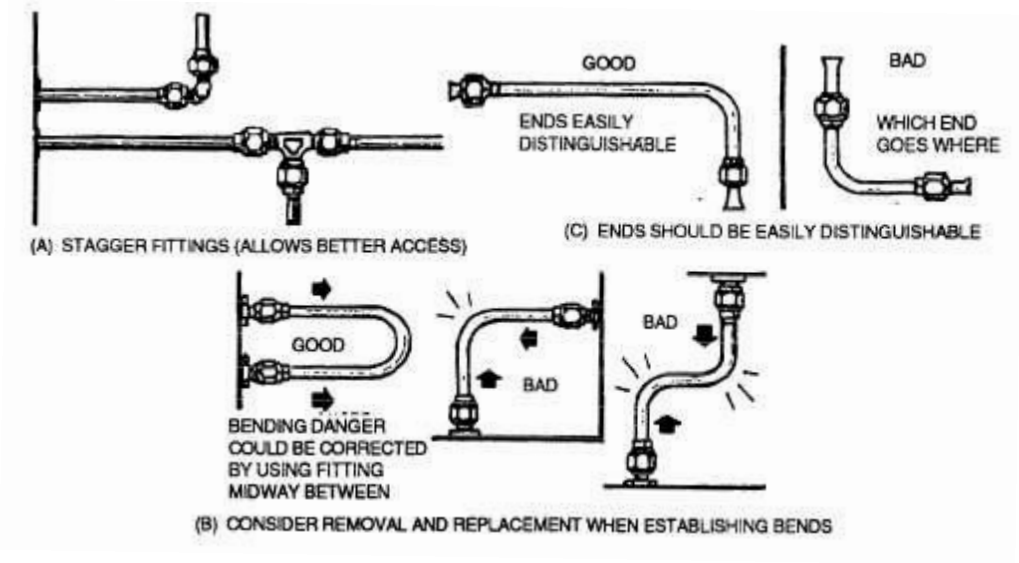

FIGURE 44. Connectors for fluid lines.

5.7 Warnings, hazards, and safety.

5.7.1 General. Design shall reflect the safety related human engineering criteria specified herein.

5.7.1.1 Order of precedence. The order of precedence (in descending order) for satisfying system safety requirements shall be as follows:

a. Design for minimum risk.

b. Incorporate safety devices.

c. Provide warning devices.

d. Provide procedures and training.

5.7.1.2 Provision to ensure accessible safety equipment. All vehicle and workspace designs shall include provisions to ensure that required safety equipment (first aid kits, fire extinguishers, breakout knives) are accessible to the operators and crew in locations described by the appropriate operator's manual or other appropriate operating instruction. Medical supplies shall be updated, deleted, and extended in accordance with accepted maintenance procedures.

5.7.2 Display of warnings and hazards.

5.7.2.1 Warning labels and placards.

5.7.2.1.1 General. Warning labels or placards (signs) shall be attached or adjacent to any equipment that presents a hazard to personnel (e.g., high voltage, heat, toxic vapors, explosion, radiation, or other bodily hazards). Facility placards and warning labels on equipment not covered under 5.7.2.1 shall be in accordance with ANSI Z535.2. For Navy shipboard applications, the use of black letters on a yellow background is permissible for warning placards.

5.7.2.1.2 Warning content. Warning labels and placards shall explicitly describe all of the following: the hazard, how to avoid the hazard, and the consequences of not avoiding the hazard.

5.7.2.1.3 NO-STEP. NO-STEP markings shall be placed at locations where personnel would likely step but in so doing could damage equipment or injure themselves. These markings shall be in all capital letters with black characters on a yellow background.

Downloaded from http://www.everyspec.com

5.7.2.1.4 Hand grasp. Areas of items capable of being used as a hand grasp by a person during completion of operation or maintenance tasks (e.g., piece of pipe, cable tray, or structure) shall be conspicuously and unambiguously marked.

5.7.2.1.5 Line identification. Pipe, hose, and tube lines for gas, steam, liquids, and high pressure air shall be clearly and unambiguously labeled and coded as to contents, pressure, identification, heat, cold, or other specific hazards.

5.7.2.2 Readability. Messages on warning labels and placards shall be based on the literacy and reading skills of the target population. Messages shall be written so that the target population can read, understand, and comply with the message. Sentences shall be short, direct, and in active voice to generally increase readability.

5.7.2.3 Visibility. Warning placards and labels shall be legible from a safe distance. For guidance on minimum text size for placards and labels, see ANSI Z535.2 and ANSI Z535.4, respectively. Warning labels and placards shall be unobstructed, conspicuous relative to their surroundings, and located so as to be obvious to operators, maintainers, and transient personnel before being exposed to the hazard.

5.7.2.4 Hazards. Warning labels and placards shall not create hazards or be hazardous themselves.

5.7.2.5 Signal word. Warning placards or labels shall display the appropriate signal word (DANGER, WARNING, CAUTION, or NOTICE) formatted in accordance with ANSI Z535.2 or ANSI Z535.4, respectively.

5.7.2.5.1 DANGER. DANGER shall be used when failure to avoid the hazard will almost certainly result in serious injury or death. Danger is reserved for the most serious hazards only.

5.7.2.5.2 WARNING. WARNING shall be used when failure to avoid the hazard may result in serious injury or death.

5.7.2.5.3 CAUTION. CAUTION shall be used when failure to avoid the hazard may result in minor or moderate injury.

5.7.2.5.4 NOTICE. NOTICE may be used when failure to obey precautions may result in system damage or to indicate important information not directly associated with a hazard or hazardous situation.

5.7.2.6 Other equipment labels. The following labels are well-known and understood across DoD; thus, they need not be in accordance with ANSI Z535.2 or ANSI Z535.4.

5.7.2.6.1 Center of gravity and weight. When equipment must be transported by person or machinery, the center of gravity and the weight of equipment shall be distinctly marked.

5.7.2.6.2 Weight capacity. The weight capacity shall be indicated on stands, hoists, lifts, jacks, vehicles, and similar weight-bearing equipment to prevent overloading.

5.7.2.6.3 Lift requirement markings. When equipment must be transported by more than one person, the lifting requirement (2-man, 3-man, machinery, etc.) shall be distinctly marked.

5.7.2.6.4 "NO-STEP" markings. "NO STEP" markings shall be provided when necessary to prevent injury to personnel or damage to equipment.

5.7.2.6.5 Electrical labels. Each receptacle shall be marked with its voltage, phase, and frequency characteristics, as appropriate. For other electrical labeling and warning requirements, see MIL-HDBK-454.

5.7.2.6.6 Hand grasp areas. Hand grasp areas shall be conspicuously and unambiguously identified on the equipment.

5.7.2.7 Visibility and illumination. Warning labels and placards shall be visible under all lighting conditions anticipated in the concept of operations. If required, special illumination may be used to meet this criterion.

Downloaded from http://www.everyspec.com

5.7.3 Visual displays. For user computer interface (UCI) and visual display terminal (VDT) displays, see 5.2.3.1.

5.7.3.1 General. Visual displays shall be used to provide the user with a clear indication of warning for off-normal equipment or system conditions.

5.7.3.2 Warning/caution. A warning/caution display shall indicate the triggering condition and provide the user with a greater probability of detection of the off-normal event than normal observation would provide in the absence of the display.

5.7.3.2.1 Use. Visual danger signals (i.e., warnings and cautions) shall be used to alert the user that a specific condition exists and to inform the user about the nature and priority of the condition.

5.7.3.2.2 Characteristics. Danger signal displays shall be clearly noticeable under all anticipated lighting conditions. Displays shall be conspicuously different from general area lighting. Displays shall have specific meaning within the operational area in which they are used. Visual warnings, cautions, and advisories shall be in accordance with MIL-STD-411.

5.7.3.2.3 Signal integration. Visual warnings, cautions, and advisories shall be integrated with those presented in other sensory modalities (e.g., auditory, tactile).

5.7.3.2.4 Priority coding. To establish the priority of visual signals, discriminatory characteristics such as flashing, color, shape, symbols, color contrast, size, luminance contrast, and location shall be used.

a. Warning signals. Visual warning signals shall be presented using flashing red with flash frequency between 3.0 and 5.0 Hertz with a 50 percent duty cycle. The flash rate for all such warning signals shall be synchronized. If used in conjunction with caution signals, warning signals shall be coded to be easily distinguished from caution signals.

b. Caution signals. If cautions take the form of flashing text, the text shall flash at a rate not greater than 2.0 Hertz with ON/OFF interval of about 70 percent on. Visual caution signals shall be yellow. A minimum of two discriminatory characteristics shall be employed to ensure rapid identification and interpretation of caution signals. If used in conjunction with warning signals, caution signals shall be not more than half the intensity of the warning signal.

5.7.3.2.5 Text height. Text for visual warning and caution signals shall be presented using characters between 8.7 and 17.4 milliradians (30 and 60 minutes of subtended arc) as measured from the longest anticipated viewing distance, with the larger size used where conditions may be adverse.

5.7.3.2.6 Co-location. Warning signals and the information required to respond to them shall be grouped in a single location. When textual information about warning conditions is listed in a single location, warnings and caution information shall be grouped separately and the operator or maintainer shall have the option to list warning and caution messages by priority, chronological, or recency order.

5.7.3.2.7 Master warning, caution, and advisory lights. Master warning, caution, and advisory lights shall be set apart from the lights which show the status of the subsystem components when used to indicate the condition of an entire subsystem, except as required for maintenance-only displays. For aviation systems use MIL-STD-411.

5.7.3.2.8 Additional warnings. Additional warnings shall be indicated by redundant coding.

5.7.4 Auditory warnings. See 5.3.1.2.

5.7.5 Pipe, hose, and tube line identification. Pipe, hose, and tube lines for liquids, gas, steam, and other such items shall be clearly and unambiguously labeled or coded as to contents, pressure, temperature, or other specific hazardous properties.

5.7.6 General workspace hazards.

5.7.6.1 Alerting device. A hazard-alerting device shall be provided to warn personnel of impending danger or existing hazards (e.g., fire, the presence of combustible or asphyxiating gas, smoke, and radiation).

Downloaded from http://www.everyspec.com

5.7.6.2 Emergency doors and exits. Emergency doors and exits shall be clearly designated and readily accessible. Emergency doors and exits shall be unobstructed and simple to operate. Emergency doors and exits shall be locatable in the dark. Emergency doors and exits shall open in 3.0 seconds or less. Emergency doors and exits shall require 44 to 133 Newtons (10 to 30 pounds of force) of operating force to open. Emergency doors and exits shall not themselves, or in operation, constitute a safety hazard. Emergency doors and exits shall permit one person egress in 5.0 seconds or less.

5.7.6.3 Stairs. Stairs, including incline, step risers, and treads, shall conform to standard safe design practice. Skid-proof flooring, stair, and step treads shall be provided. Where conditions warrant special precaution, surfaces shall be treated with a nonslip coating.

5.7.6.4 Obstructions. Workspace around areas where maintenance is performed shall be free of obstructions which could cause injury to personnel, either through accidental contact with the obstruction or because the obstruction requires an awkward or dangerous body position.

5.7.6.5 Overhead. Pipe hangers or any other item mounted in the overhead of passageways, walkways, or other dedicated walking areas shall not protrude below a level 2134 millimeters (84 inches) (preferred) and 2032 millimeters (80 inches) (required), above the walking surface. Items (e.g., pipe hangers) mounted to bulkheads to support pipe or wireways shall be placed only in the areas shown on figure 45.

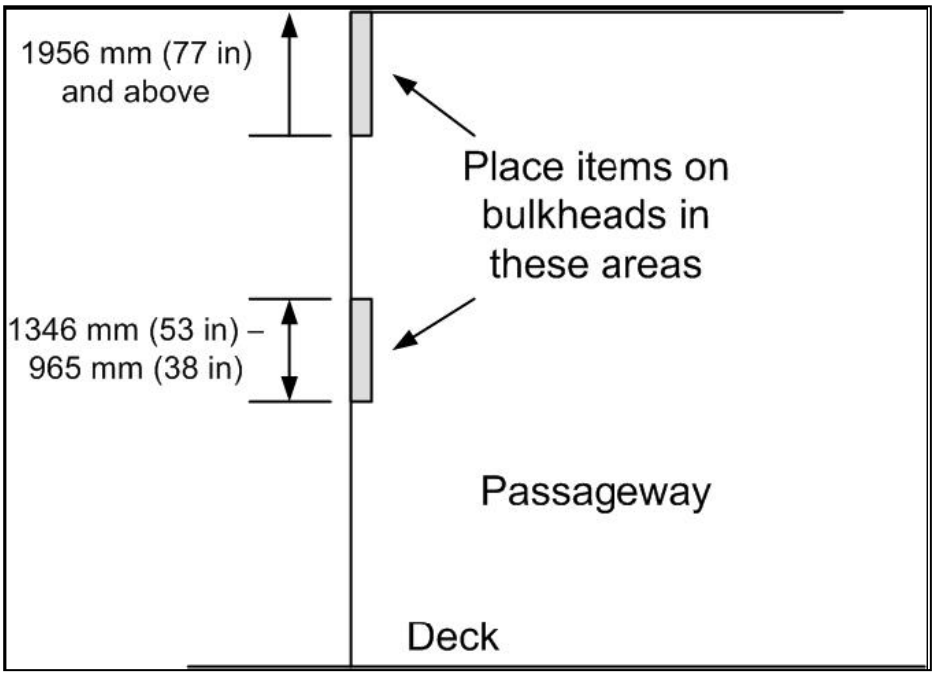

FIGURE 45 Areas to place items on a bulkhead (dimensions measured from the floor).

5.7.6.6 Storage racks. Storage racks located in passageways and secured to bulkheads for gas bottles, casualty cables, firefighting equipment, or other items, shall not impede traffic flow. Storage racks located in passageways and secured to bulkheads shall not have securing studs or other sharp objects (e.g., corners) protruding into the passageway.

5.7.6.7 Cabinet doors. Hinges for doors on lockers, electrical cabinets, storage bins, equipment lockers, or other spaces shall be located so that a partial or fully opened door will not interfere with personnel or equipment flow or cause injury to personnel moving past these spaces.

5.7.6.8 Illumination. Adequate illumination shall be provided in all areas. Warning placards, stairways, and all hazardous areas shall be illuminated in accordance with the recommended levels of lighting in 5.2.1.4.

Downloaded from http://www.everyspec.com

5.7.6.9 Thermal contact hazards.

5.7.6.9.1 Exposure limits. Equipment which, in normal operation, exposes personnel to surface temperatures greater than those shown in table XXXI or less than 0 °C (32 °F) shall be appropriately guarded. Surface temperatures induced by climatic environment are exempt from this requirement. Cryogenic systems shall also be appropriately guarded.

TABLE XXXI. Temperature exposure limits.

	Temperature limits		
Exposure	**Metal**	**Glass**	**Plastic or wood**
Momentary contact	60 °C (140 °F)	68 °C (154 °F)	85 °C (185 °F)
Prolonged contact or handling	49 °C (120 °F)	59 °C (138 °F)	69 °C (156 °F)

5.7.6.9.2 Burn hazards. Measures shall be taken to guard against inadvertent skin contact with surfaces at high or low temperatures. Surfaces that personnel touch (gearshift levers, steering wheels, dash controls, seats, side panels, and compartment walls) shall have low heat conductivity.

a. If personnel can touch metal surfaces that may get as hot as 49 °C (120 °F), special precautions shall be indicated such as shielding, insulating, relocating components, or adding warning decals, signs, or labels. Figure 46 shows the burn criteria for human skin.

b. For temperatures at or below 0 °C (32 °F), pain, tissue damage (freezing), or both can occur.

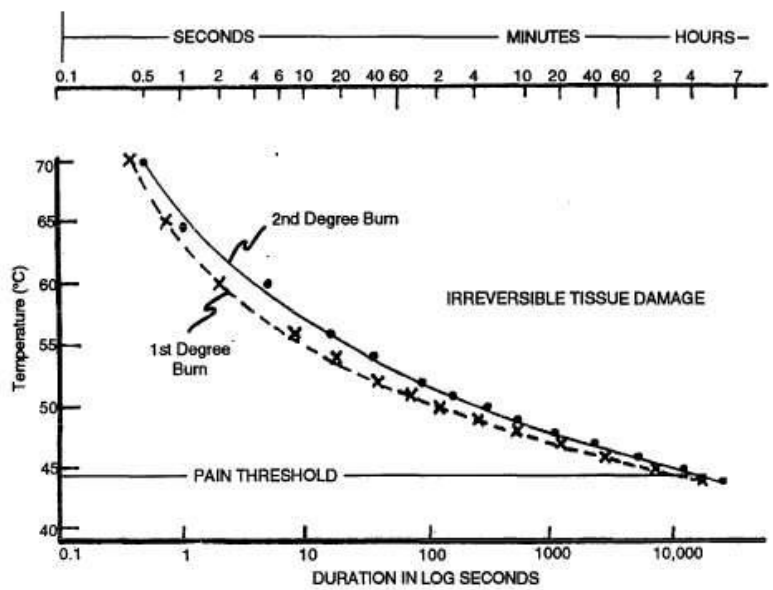

FIGURE 46. Burn criteria for human skin.

5.7.7 General equipment-related hazards.

5.7.7.1 General. In evaluating equipment safety characteristics, the following areas shall be reviewed:

a. Failure modes and hazardous effects.

b. Electrical and electronic safety factors.

c. Mechanical safety factors, including hydraulics and pneumatics.

Downloaded from http://www.everyspec.com

d. Toxicity.

5.7.7.2 Radiation. The system shall protect the crew from exposure to RF radiation to the limits as stated in table XXXII and shown graphically on figure 47. These limits were modified from IEEE C95.1 to remove an excessive factor of safety in the power density limit for general populations including children.

TABLE XXXII. Maximum permissible exposure (MPE) to radio frequency electromagnetic fields. [1/]

Frequency Range (MHz)	RMS Electric Field Strength (E) [2/] (V/m)	RMS Magnetic Field Strength (H) [2/] (A/m)	RMS Power Density (S) E–Field, H–Field (W/m^2)	Averaging Time [3/] $\|E\|^2$, $\|H\|^2$, or S (minutes)	
0.1 – 1.34	614	$16.3/f_M$	$(1000, 100000/f_M^2)$ [4/]	6	6
1.34 – 3.0	$823.8/f_M$	$16.3/f_M$	$(1800/f_M^2, 100000/f_M^2)$	$f_M^2/0.3$	6
3.0 – 30	$823.8/f_M$	$16.3/f_M$	$(1800/f_M^2, 100000/f_M^2)$	30	6
30 – 100	27.5	$158.3/f_M^{1.668}$	$(2, 9400000/f_M^{3.336})$	30	$0.0636 f_M^{1.337}$
100 – 300	27.5	0.0729	2	30	30
300 – 5000	–	–	$f/150$	30	
5000 – 15000	–	–	$f/150$	$150/f_G$	
15000 – 30000	–	–	100	$150/f_G$	
30000 – 100000	–	–	100	$25.24/f_G^{0.476}$	
100000 – 300000	–	–	100	$5048/[(9f_G-700)f_G^{0.476}]$	

NOTES:

1/ f_M is the frequency in MHz; f_G is the frequency in GHz.

2/ For exposures that are uniform over the dimensions of the body, such as certain far-field plane-wave exposures, the exposure field strengths and power densities are compared with the MPEs in the table. For non-uniform exposures, the mean values of the exposure fields, as obtained by spatially averaging the squares of the field strengths or averaging the power densities over an area equivalent to the vertical cross section of the human body (projected area), or a smaller area depending on the frequency (for further details please see IEEE C95.1), are compared with the MPEs in the table.

3/ The left column is the averaging time for $|E|^2$, the right column is the averaging time for $|H|^2$. For frequencies greater than 400 MHz, the averaging time is for power density S.

4/ These plane-wave equivalent power density values are commonly used as a convenient comparison with MPEs at higher frequencies and are displayed on some instruments in use.

Downloaded from http://www.everyspec.com

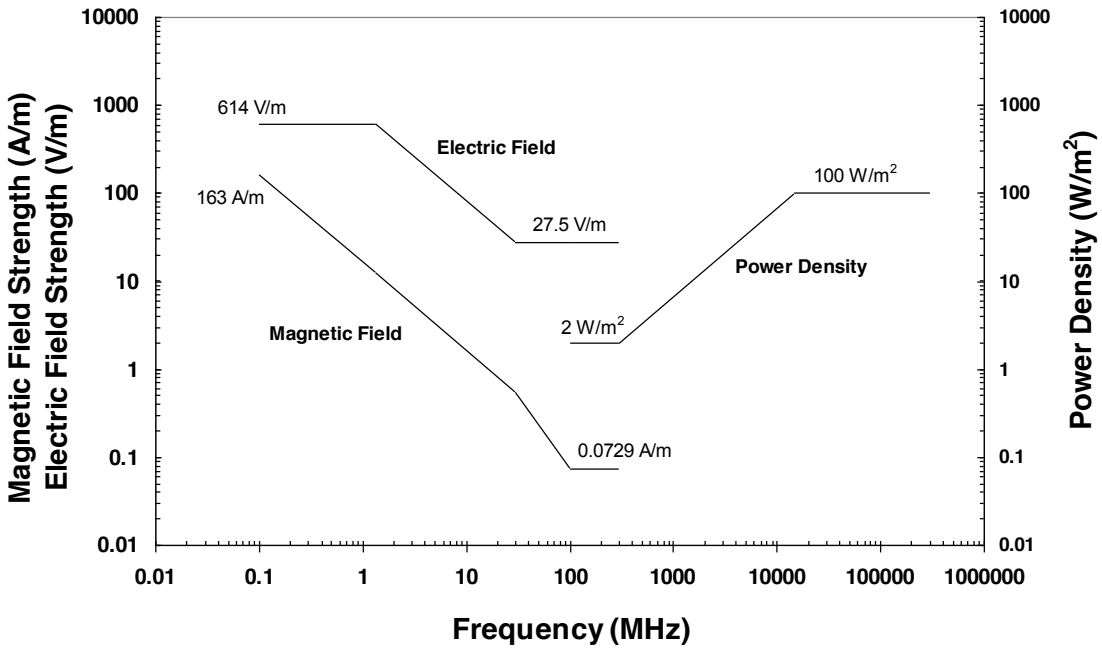

NOTES:

1. Illustrated to show whole-body resonance effects around 100 MHz.
2. Modified from IEEE C95.1.

FIGURE 47. Radio frequency electromagnetic field exposure limits.

5.7.7.3 Interlocks and warnings. The operation of switches or controls which initiate hazardous operations (e.g., ignition, movement of a crane) shall require the prior operation of a related or locking control. Where practicable, the critical position of such a control shall activate a visual and auditory warning device in the affected work area.

5.7.7.4 Access. Equipment items shall be located and mounted so that access to them can be achieved without danger to personnel from electrical, thermal, mechanical, chemical, radiological, or other hazards.

5.7.7.5 Hazardous access. Where access areas must be located over dangerous mechanical or electrical components, the access door or cover shall be designed to turn on an internal light when opened. A highly visible warning label shall be provided on the outside of the door or cover.

5.7.7.6 Edge rounding. Where applicable, all exposed edges and corners shall be rounded to a radius not less than 0.75 millimeters (0.03 inches). Sharp edges and corners that can present a personnel safety hazard or cause equipment damage during usage shall be suitably protected or rounded to a radius not less than 13 millimeters (0.51 inches).

5.7.7.7 Safety pins and streamers. Safety pins and streamers shall be clearly visible and accessible during ground maintenance.

5.7.7.8 Handholds/footholds. Handholds and footholds shall be furnished where needed to assist personnel in climbing onto equipment or in performing intended tasks.

5.7.7.9 Stored energy devices. Stored energy devices that possess stored energy (e.g., compressed or expanded springs, air bottles, shock absorbers under compression) shall be designed and labeled for safety in operation and maintenance.

Downloaded from http://www.everyspec.com

5.7.8 Platforms.

5.7.8.1 Locks. Self-locking or other fail-safe devices shall be incorporated on elevating stands, work platforms, and "draw bridges" to prevent accidental or inadvertent collapsing or falling.

5.7.8.2 Handrails, safety bars, and chains.

5.7.8.2.1 Installation on platforms. Handrails, safety bars, or chains shall be installed around platforms and across stair or step openings in platforms, ledges, and catwalks.

5.7.8.2.2 Installation around platforms. Handrails, safety bars, or chains shall be installed across stair or step openings in platforms, ledges, and catwalks.

5.7.8.2.3 Height. Handrails, safety bars, or chains shall be placed 91 to 110 centimeters (36 to 43 inches) above the standing surface and shall include an intermediate guard.

5.7.8.2.4 Materials. Chains shall only be used only where it is not feasible to install handrails or safety bars.

5.7.8.2.5 Kickboards. Kickboards, 15 centimeters (6.0 inches) high, shall be installed around platforms, ledges, and catwalks.

5.7.8.3 Safety mesh. Screen or safety mesh shall be installed on the underside of open gratings, platforms, or flooring surfaces where small tools, parts, or debris may fall through the grating onto workers or equipment beneath the platform.

5.7.8.4 Weight capacity. To prevent overloading, weight-sharing equipment such as stands, hoists, lifts, and jacks shall be marked to show weight capacity.

5.7.8.5 High centers of gravity. Equipment with a high center of gravity that may tip over and injure personnel shall have anchors or outriggers for stability and shall display an appropriate warning.

5.7.9 Electrical, mechanical, fluid, toxic, and radiation hazards.

5.7.9.1 Electrical hazards.

5.7.9.1.1 General background. The principal electrical hazard is shock. The effects of electric shock depend on the body's resistance, the current path through the body, the duration of the shock, the amount of current and voltage, the frequency of an alternating current, and the individual's physical condition. The most critical determinant of injuries is the amount of current conducted through the body. Besides the obvious risk of burns and injuries to the nervous system, electric shock can produce involuntary muscular reactions that injure people and can damage equipment. All electrical systems of 30 volts or more are potential shock hazards. Research indicates that most shock deaths result from contacts with electrical systems ranging from 70 to 500 volts. Table XXXIII summarizes typical effects of various levels of electrical current.

TABLE XXXIII. Shock current intensities and their probable effects.

Current (milliamperes)		**Effects**
AC (60 Hz)	**DC**	
0 – 1.0	0 – 4.0	Perception
1.0 – 4.0	4.0 – 15	Surprise
4.0 – 21	15 – 80	Reflex action
21 – 40	80 – 160	Muscular inhibition
41 – 100	160 – 300	Respiratory block
Over 100	Over 300	Usually fatal

Downloaded from http://www.everyspec.com

5.7.9.1.2 Power lines. Both ends of the power line and all branches shall be fused.

5.7.9.1.3 Power interruption. The system shall provide the crew with capability to control the power to an electrical circuit.

5.7.9.1.4 Energized status. The crew shall be capable of confirming the de-energized status of a circuit.

5.7.9.1.5 Electrical currents. The crew shall be protected from exposure to electrical currents in accordance with table XXXIV.

TABLE XXXIV. Electrical currents exposure limits for all systems.

Frequency (Hz)	Maximum current (ma) (AC + DC components combined)
DC	40
15 – 2000	8.5
3000	13.5
4000	15
5000	16.5
6000	17.9
7000	19.4
8000	20.9
9000	22.5
>10000	24.3

5.7.9.1.6 Prevention. Personnel shall be protected from electrical shock by suitable interlocks, grounding, and enclosures or other protective devices. The main method of alerting personnel to potential shock hazards is through effective visual and audible warnings.

a. Color. Equipment designed for safety, protective, or emergency functions shall be colored using the guidance of MIL-HDBK-1473.

b. Danger markings. Caution markings shall warn personnel about the dangers of hazardous voltages and the safety precautions they should take to avoid the shock.

c. Danger signs. Danger signs shall be supplemented by physical barriers or other positive protection where feasible. Signs, reading “DANGER – HIGH VOLTAGE” or “DANGER (insert maximum voltage) VOLTS,” shall be displayed prominently on safety covers, access doors, and inside equipment where hazardous voltages are exposed. Markings on electrical equipment shall be in accordance with the requirements in Article 510 of the NFPA 70.

(1) Signs shall be durable.

(2) Signs shall be easy to read.

(3) Signs shall be located where dust and foreign matter will not eventually obscure wording.

d. Warning signals. Warning signals such as lights, bells, horns, or other devices shall be used to alert personnel of danger. These signals shall be located where the people who must take corrective action can perceive them most easily. Multiple redundant warning signals, lights, and bells may be required if ambient noise could mask the audible signal, or personnel might not be looking at a warning light.

Downloaded from http://www.everyspec.com

5.7.9.1.7 Safety switches. The two basic types of safety switches for preventing electric shock are interlocks and main-power switches.

a. Interlocks. An interlock is a switch that automatically turns power off when the access door, cover, or lid of the equipment is open. These switches are ordinarily wired into the "hot" lead to the power supply and operate whenever an access cover is opened, thus breaking the circuit whenever personnel enter the enclosure.

(1) Access to high-voltage potential. Every door or cover that provides access to high-voltage potentials shall have an interlock.

(2) Selection. Selection of the type of interlock switch to be used shall be based on use, access type, and reliability. The door interlock switch shown on figure 48 has proven most satisfactory.

(3) Maintenance. The use of interlocks assures that power is off during maintenance. If maintenance personnel must open the equipment and work on it while the power is on, there shall be provision for bypassing interlocks.

(a) Bypass. Such bypass switches shall be located inside the equipment in a position where closing the access door or cover automatically restores interlock protection. Wherever these bypass switches are used, there shall also be a warning signal to show personnel that there is danger because the interlock has been bypassed. These warnings shall include a flashing red light and an appropriate warning placard or sign.

(b) Battle-short switch. Wherever complicated interlocks are used on high priority equipment, there shall be a battle-short switch (or terminals for connecting one) which bypasses all interlocks. The battle-short switch circuit consists of a single switch, wired in parallel with the interlock system. Closing the battle-short switch thus short circuits all of the interlock switches, turning power on regardless of whether interlocks have been opened. Whether mounted on the equipment panel or remotely, battle-short switches are for emergency use only, and they shall be so marked. They shall have adequate protection against accidental operation such as seals which must be broken before the switch can be operated. Switches shall have appropriate visual and auditory warning devices to alert personnel that interlocks have been bypassed.

(c) Non-bypassable interlocks. Doors, covers, or lids that provide access to voltages in excess of 500 volts or allow exposure to microwave and radio frequency radiation in excess of 300 kiloHertz shall have non-bypassable interlocks.

(d) Interlock override. If a task requires that a maintainer work on hazardous equipment that is equipped with a disabling interlock, the equipment shall have an interlock override that permits manual bypassing or overriding of the interlock when the case or cover is open. Any interlock override shall automatically reset when the cover or case is replaced. Wherever the interlock override is used, there shall also be an auditory warning signal and a visual warning signal to show personnel that there is danger because the interlock has been bypassed. These warnings shall include a flashing red light and an appropriate warning placard or sign.

b. Main-power switch. Each item of equipment shall have a clearly labeled main-power switch that turns off all power to the item by opening all leads from the main-power service connection. Main-power switches shall be safeguarded to prevent heavy arcing. The switch box shall be designed so the box cannot be opened when the switch is turned on. Such switches are available as standard, commercial equipment.

Downloaded from http://www.everyspec.com

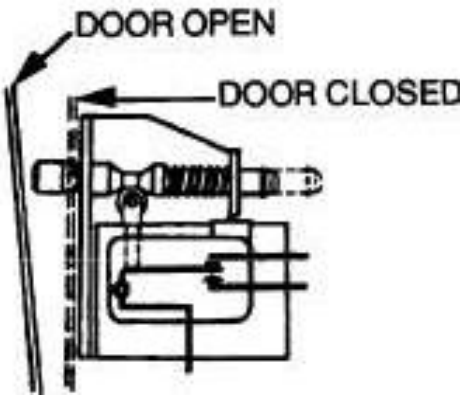

FIGURE 48. Door interlock switch.

5.7.9.1.8 Discharging devices (bleeders). Because high-quality filter capacitors can store lethal charges for relatively long periods of time, all medium- and high-voltage power supplies shall have devices that discharge them when they are turned off. Bleeders shall be incorporated in all power supplies where the product of resistance (in ohms) and capacitance (in farads) is 3.0 seconds or more.

5.7.9.1.9 Insulation of tools. Tools and test leads to be used near high voltages shall be adequately insulated.

5.7.9.1.10 Plugs and receptacles. Plugs and receptacle configurations shall preclude inserting a plug of one voltage rating into a receptacle of another rating.

5.7.9.1.11 Voltage exposure. All hot contacts shall be socket contacts.

5.7.9.1.12 Dangerous voltage or current. Guards, grounding, interlocks, and warning placards shall be provided to minimize exposing personnel to dangerous voltages or currents.

5.7.9.1.13 Ground potential. Equipment shall be designed so that all external parts, other than antenna and transmission line terminals, will be at ground potential.

a. Grounding techniques. A terminal spot welded to the chassis provides a reliable ground connection. Where welding is not feasible, as with an aluminum chassis, the ground terminal shall be fastened down by a machine bolt, lock washer, and nut (see figure 49). Ground lugs shall not be stacked on bolts with any material subject to cold flow. The machine bolts used to mount ground lugs shall be large enough that eventual relaxation will not loosen the ground connection. A lock washer shall always be used to keep the ground tight. Any non-conductive finish on the chassis shall be removed before bolting down the ground lug. Ground lugs shall not be attached with rivets because rivets do not give reliable electrical connections.

b. Common ground. The common ground of each chassis shall connect to a through-bolt mounted on the enclosure. The common ground of each chassis shall be clearly marked “ENCLOSURE GROUND”. An external safety ground strap shall, in turn, be connected to this through-bolt. The external ground strap shall be a suitably plated flexible copper strap with a current-carrying capacity at least twice as large as the equipment requires (see figure 50).

c. Panel-mounted components. Panel-mounted components, especially meters and test jacks, are occasionally used to monitor current in power lines. Such items shall be connected into the grounded side of the power line rather than into the ungrounded side; this precaution limits current flow if the component shorts to the grounded chassis.

d. Non-grounded lines. Some power-supply lines are not grounded as a means of reducing interference. These lines shall be bypassed through capacitors to ground. The total current to ground, including any leakage through the capacitor, shall be not greater than 5.0 milliamperes.

Downloaded from http://www.everyspec.com

e. Electrically operated hand tools. Electrically operated hand-held power tools shall be designed with three-wire power cords with one wire at ground potential. Electrically operated hand-held power tools shall have exposed surfaces which are either non-conducting or are electrically connected to the ground wire. Exposed surfaces include cases, grips, handles, switches, triggers, chucks, and other surfaces which are capable of being contacted during operation. Portable tools, protected by an approved system of double insulation or its equivalent, may be used without a ground wire when approved by the procuring activity. Where ground fault protection cannot be incorporated into system wiring, portable ground fault interrupters shall be provided for use with portable electric hand tools, pumps, and other equipment.

f. Dead man switch. Hand tools with the potential for injury to personnel (e.g., deck sanders and large drills) shall be equipped with a dead man switch.

(1) The use of a dead man switch is intended as a safety critical operation and as such shall require single hand operation.

(2) The switch itself shall not require more than one hand to engage/disengage grounding potential.

FIGURE 49. Grounding methods.

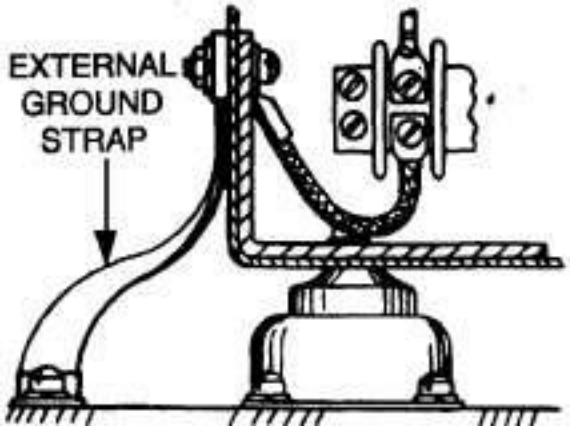

FIGURE 50. Cabinet grounding system.

5.7.9.1.14 Electronic equipment. See MIL-HDBK-454, Guideline 1, for safety design criteria guidance.

a. Test equipment. Electronic test equipment (signal generators, amplifiers, and oscilloscopes) which are plug connected shall have an integral ground prong to ensure automatic ground connection.

Downloaded from http://www.everyspec.com

b. Fusing. Circuits shall be fused so that other parts of the circuit will not be damaged if a fuse is removed or if it ruptures. All leads from the primary power lines shall be protected by fuses. Fuses shall be connected between the main-power switch and the load. Branch-line holders shall be designed so that, when correctly wired, fuses can be changed without risk of accidental shock. Where feasible, both of the fuse-holder contacts shall be recessed so users cannot touch them. At least one of the fuse-holder contacts shall be recessed where personnel cannot touch it. The single contact shall be connected to the supply line. The accessible contact, if there is one, shall be connected to the load. Figure 51 shows how an instrument-type fuse holder shall be wired to keep users from touching the high-potential contact.

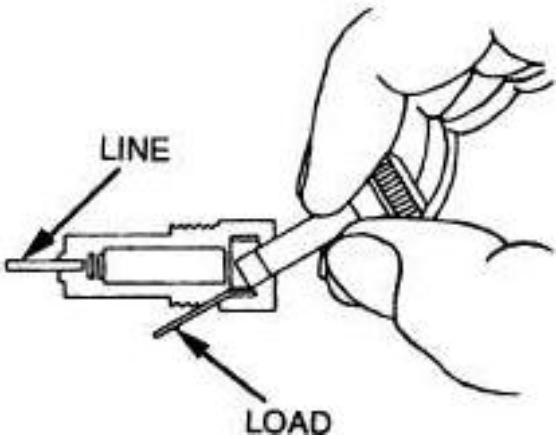

FIGURE 51. Correct instrument-type fuse holder wiring.

5.7.9.1.15 Batteries. Batteries that have ratings greater than 25 ampere-hours shall have terminal guarding to prevent inadvertent short circuit. Terminal guarding shall also prevent short circuiting the battery in spite of clearly improper but possible acts by personnel, such as placing tools across terminals, resting a heavy object on the battery cover, or standing on a battery cover.

a. All rooms designed for battery storage and charging shall be provided with an eyewash fountain and shower. Fountains and showers may be placed outside the room provided they are placed immediately adjacent to the entrance.

b. Entrances into the room shall permit the use of hand trucks or dollies to move batteries into and out of the space.

c. Battery storage racks shall be designed and sized to permit the smallest user (e.g., 5th percentile female) to install or remove the largest batteries to be stored or charged.

5.7.9.1.16 Electrical conductors. Electrical conductors which maintainers might contact during maintenance activities shall be insulated.

5.7.9.1.17 Covers. Grounded or nonconductive protective covers shall be provided for all electrical equipment.

5.7.9.2 Mechanical hazards.

5.7.9.2.1 Guards. A guard shall be provided on all moving parts of machinery and transmission equipment, including pulleys, belts, gears, and blades on which personnel may become injured or entangled.

a. Guards shall be installed so as to require a special tool to be removed. Quick acting fasteners or any hand-operated guard fasteners shall not be used.

b. All moving and rotating equipment will be disabled and unable to function as long as the guard is not permanently installed.

Downloaded from http://www.everyspec.com

c. High-temperature parts shall be guarded or located so users will not touch them in normal operation or maintenance.

d. If high-temperature parts cannot be guarded, there shall be prominent warning signs.

e. Wherever possible, a guard shall be designed so users can inspect parts without having to remove them. Guards shall not interfere with parts inspection, especially if a part's failure can cause a hazardous condition.

5.7.9.2.2 Telescoping ladders. Adequate finger clearance shall be provided between rungs of telescoping ladders.

5.7.9.2.3 Protrusions. All edges and corners shall be rounded, having as large a rounding radius as practical. Designers shall avoid thin edges. Units shall be designed so users can carry them without risk of cutting their hands on sharp edges. To minimize protrusions from equipment surfaces, flat-head screws shall be used where possible; otherwise, pan-head screws shall be used. To reduce the risk of skin abrasion, all exposed surfaces shall be machined smooth, covered, or coated. In areas where users must make rapid movements, small projecting components shall be avoided or covered. If small projecting parts (such as toggle switches or small knobs) must be mounted on a front panel, recessed mountings shall be considered.

5.7.9.2.4 Ventilation. There shall be enough ventilation to keep parts and materials from getting so hot that they will be damaged or their useful life will be shortened. Exposed parts of the equipment shall never, under any condition of operation, get hot enough to endanger personnel. Hot components may be cooled with forced air. Any air-exhaust openings shall be located where personnel are not exposed to direct drafts.

5.7.9.2.5 Perforations. Some housings, cabinets, and covers shall be perforated to allow air circulation. Many small perforations are better than a few large ones. Perforations shall be no larger than 13 millimeters (0.5 inch) in diameter. Any component which rotates, oscillates, or carries high voltage shall be spaced back from perforations so personnel cannot touch it accidentally.

5.7.9.2.6 Equipment instability. Equipment shall be designed for maximum stability. Particular attention shall be given to portable equipment such as maintenance stands, tables, benches, platforms, and ladders. Walkways, catwalks, and any surfaces used for climbing shall have nonskid metallic materials, expanded metal flooring, or abrasive surfaces. Ladders and steps shall be designed so they can be de-iced with hot water or steam. There shall be hand grips on platforms, walkways, stairs, and around floor openings. Hand grips shall ordinarily be fixed. When required, hand grips shall fold or telescope so they are concealed or flush with the surface except when being used. Folding grips shall remain securely folded when not in use. Users shall not need tools to open folding grips for use.

5.7.9.2.7 Center of gravity. Equipment shall be designed to maximize safety and stability when moved on inclines, such as cargo ramps, or lifted by cranes for shipping (see figure 52). The center of gravity and jacking points shall each be suitably marked to show their locations. The center-of-gravity of skids or pieces of equipment, uniquely shaped boxes or packages, or loads in excess 45.5 kilograms (100 pounds) shall be distinctly marked and visible to a person responsible for moving the load. The weight lifting or supporting capacity of stands, hoists, cranes, jacks, padeyes, rigging, and any other item used to lift, transport, or support equipment during operation or maintenance shall be marked to indicate their capabilities.

Downloaded from http://www.everyspec.com

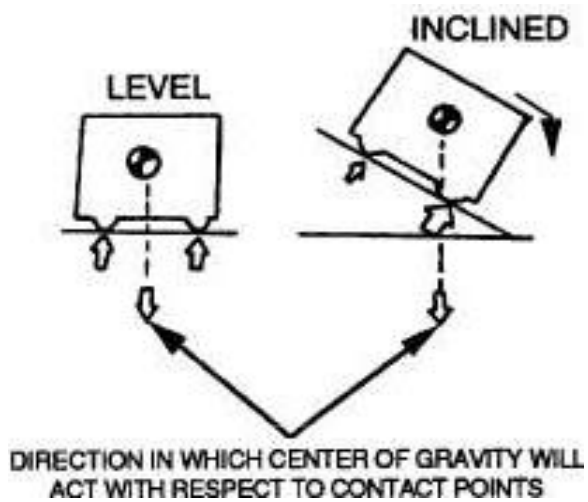

FIGURE 52. Effects of incline on center of gravity location of equipment.

5.7.9.2.8 Lifting/padeyes, rigging, and other items used to lift, transport, or support. The weight lifting or supporting capacity of stands, hoists, cranes, jacks, rigging, and any other item used to lift, transport, or support equipment during operation or maintenance shall be marked in accordance with 5.4.

5.7.9.2.9 Implosion and explosion.

a. Implosion. CRTs pose a special hazard because minor physical damage (accidental nicks or scratches) may trigger later implosions. Therefore, the face of CRTs shall always be shielded by shatterproof glass attached to the panel. The terminal end of CRTs shall be located within the equipment housing whenever possible. If the terminal end must extend outside the equipment housing, it shall have a sturdy cover to protect the tube. The CRT terminal end cover shall be anchored to the main housing structure firmly enough to withstand shipping and rough handling so that external pressures will not be transmitted to the tube and its wiring. There shall be signs inside the equipment warning maintenance personnel that the neck of the tube is fragile and must be handled with caution. All other devices that are capable of implosion shall also conform to the requirements of this paragraph.

b. Explosion. Equipment that may be operated, maintained, or stored in an explosive atmosphere shall be designed to eliminate the possibility of an explosion. All electrical equipment that will be used near flammable gases or vapors shall be explosion-proof. Risk of explosion shall be minimized by isolating hazardous substances from heat sources and by using spark arrestors, vents, drains, and other safety techniques as appropriate.

5.7.9.3 Fluid hazards.

5.7.9.3.1 Connectors. Each connector used in handling or controlling hazardous fluids, including propellants, solvents, toxic materials, hypergolics, and asphyxiants, shall be incompatible with other connectors within the access area of that connector.

5.7.9.3.2 Fluid and fuel servicing equipment. Automatic shutoff devices shall be provided on fluid and fuel service equipment to prevent overflow and spillage.

5.7.9.3.3 Flammable liquid lockers. Flammable liquid lockers shall not be installed closer than 1.8 meters (5.0 feet) to a door or exit if it is the only means of egress from the space or compartment, to an open control station, or from a door or exit leading to a control station used for emergency operations.

5.7.9.4 Toxic hazards.

Downloaded from http://www.everyspec.com

5.7.9.4.1 General. Personnel shall not be exposed to the concentrations of toxic substances in excess of the limits specified in either the DoD Occupational Safety and Health (OSH) standards or specialized standards applicable to military unique equipment, systems, or operations (including 29 CFR 1910, OSHA Standards, and also in the Federal Register). From the practical standpoint of controlling health hazards, the critical contaminants are carbon monoxide, ammonia, nitrogen oxides, sulphur dioxide, and aldehydes (methane). In sufficient concentrations, the substances may incapacitate personnel or reduce substantially their performance through eye irritation, nausea, reduced mental alertness, and unconsciousness.

5.7.9.4.2 Carbon monoxide (CO). The prediction of carboxyhemoglobin (COHb) blood content is determined by the following empirical equation:

(1.0 ppm CO) % COHbt = % COHbo (e exp (-t/A)) + 218 (1-e exp (-t/A)) x (B + 1403)

where:

% COHbt is the predicted carboxyhemoglobin in the exposed individual.

% COHbo is the amount of COHb usually found in nonsmoking adults.

T is the exposure duration in minutes.

Ppm CO is the carbon monoxide exposure in parts per million of contaminated atmosphere.

A and B are constants which are obtained from table XXXV and depend on the estimated physical activity level of the individual during the exposure.

a. Levels of CO in personnel areas. CO in personnel areas shall be reduced to the lowest level feasible.

b. Concentration of CO in personnel areas. Personnel shall not be exposed to concentrations of CO that will result in COHb levels in their blood greater than 5.0 percent for all system design objectives and aviation system performance limits and 10 percent for all other system performance limits.

TABLE XXXV. Constants for predicting COHb blood content.

Work effort scale	Work effort description	A value	B value
1	Sedentary	425	806
2		241	1421
3	Light work	175	1958
4		134	2553
5	Heavy work	109	3144

NOTE:

1. When using the equations to estimate the percent COHb blood levels for combat vehicle occupants, the following work stress levels shall be applied as appropriate: activities involving weapons fire: level 4; all other mission activities: level 3. An initial value of COHb = 1.0 percent shall be assumed for all estimates.

5.7.9.5 Radiation.

5.7.9.5.1 Radiation-emitting systems. The design of radiation-emitting systems and equipment shall minimize hazards to operators and maintenance personnel.

5.7.9.5.2 Internal ionizing radiation. If internal ionizing radiation hazards (e.g., breakage of a tritium-illuminated source in a fire-control device or rifle sight presents potential tritium ingestion by individuals in the area) cannot be eliminated, they shall be minimized through engineering design.

Downloaded from http://www.everyspec.com

5.7.9.5.3 Ionizing radiation exposure rates. Ionizing radiation exposure rates produced by any device shall not exceed 0.5 milliroentgens/hr at a distance of 5.0 centimeters (2.0 inches) from any point on the external surface.

5.7.9.5.4 Radiation limits. Microwave, radio frequency, X, and laser radiation limits shall be in accordance with MIL-HDBK-454.

5.7.9.5.5 Control of personnel exposure. Definitive and specific data shall be obtained from the service agency responsible for control of personnel exposure to radiation.

5.7.9.5.6 Nuclear radiation. The maximum nuclear radiation to which personnel may be exposed shall be in accordance with 20 CFR 10.

5.7.10 Fire.

5.7.10.1 General.

5.7.10.1.1 Precautions. All reasonable precautions shall be taken to minimize fire hazards.

5.7.10.1.2 Presence of non-combustible enclosures with minimal openings. If capacitors, inductors, or motors are potential fire hazards, they shall have non-combustible enclosures with minimal openings.

5.7.10.1.3 Avoidance of use of materials that produce toxic fumes. Materials that can produce toxic fumes shall not be used because equipment must often be installed in confined spaces.

5.7.10.1.4 Avoidance of use of materials that liberate combustible materials. Designers shall avoid materials that, under adverse operating conditions, might liberate combustible materials.

5.7.10.1.5 Emitting flammable gases. Equipment shall be designed so it will not emit flammable gases during storage or operation. If any such gases are unavoidably emitted during operation, there shall be automatic cutoffs and suitable warnings.

5.7.10.1.6 Avoidance of dangerous smoke/fumes. Equipment shall not produce undesirable or dangerous smoke and fumes.

5.7.10.1.7 Verification of protective features' effectiveness. Finished equipment shall be checked carefully to verify that protective features are actually effective.

5.7.10.2 Fire extinguishers.

5.7.10.2.1 Presence of portable, hand-operated fire extinguishers. Where fire hazards are known to exist, or may be created by the equipment, there shall be portable, hand-operated fire extinguishers present.

5.7.10.2.2 Placement of portable, hand-operated fire extinguishers. Fire extinguishers shall be located so they are immediately and easily accessible.

5.7.10.2.3 Selection of fire extinguishers. Fire extinguishers shall be selected for suitability to the class of fires most likely to occur in the area:

a. Class A fire extinguishers shall be used for ordinary combustible materials (wood, paper, and rags) which can be extinguished with water or aqueous solutions.

b. Class B fire extinguishers shall be used for fires involving flammable liquids (gasoline and other fuels, solvents, greases, and similar substances) which must be extinguished by diluting, eliminating air, or blanketing.

c. Class C fire extinguishers shall be used for fires in electrical equipment (motors, transformers, and switches) which must be extinguished by a material that does not conduct electricity.

5.7.11 Dust.

5.7.11.1 Dust concentration. The dust concentrations to which vehicle personnel are exposed vary widely from imperceptible levels to dense clouds which may reduce visibility to almost zero; therefore, a ventilation system shall be used.

Downloaded from http://www.everyspec.com

5.7.11.2 Ventilation system. The ventilation system intake shall be located in an area where concentration of dust is minimal, including when a vehicle is moving. Filters shall be capable of removing dust particles above five microns in diameter. Dust skirts, which are of great value in reducing the dust raised around a vehicle, shall be provided.

5.7.11.3 Personnel protection. Dust causes temporary eye and throat irritation and at times degrades performance and interferes with operations. Goggles and throw-away dust mask respirators shall be provided for use where needed.

5.7.12 Mud and water. Mud and water are analogous to dust in that the same aspects of design affect them. As with dust, it may be impractical to eliminate them as problems affecting comfort, but vehicle design shall minimize the problem.

5.7.13 Warnings for training system. Training materials, devices, simulators, and other equipment using embedded training, shall incorporate safeguards, safety warnings, and procedures developed for the operational system. Training devices, simulators and other equipment shall also incorporate safeguards, warnings, and procedures necessary for safe execution of training.

5.7.14 Safety barriers. Safety barriers shall be used to protect a person from contacting a hazard (e.g., rotating machinery, electrical contact, or hot pipe) as shown on figure 53.

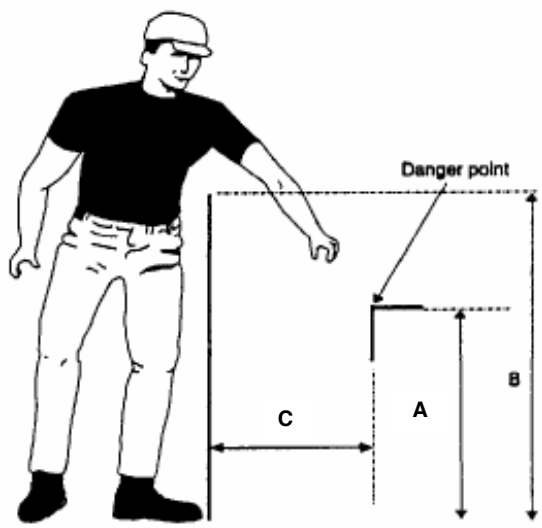

There should be no interpolation of the values in the table, see the following examples:

Example 1

The height of the danger point, "A", is 1500 mm (59.1 in) and its horizontal distance, "C", from the proposed barrier is 700 mm (27.6 in). Using the table, the height of the barrier, "B", should be 1800 mm (71.1 in).

Example 2

The height of the barrier, "B" is 1300 mm (51.3 in) and the height of the danger point, "A", is 2300 mm (90.6 in). Using the table, the barrier should be positioned 600 mm (23.7 in) from the danger point.

Example 3

The height of the barrier, "B", is 1700 mm (66.9 in) and the horizontal distance, "C", from the danger point is 550 mm (21.7 in). Using the table, the danger point should not be between 1200 and 2200 mm (47.4 and 86.8 in).

Distance of danger point from floor "A", mm (in)	**Height of edge of barrier "B", mm (in)**							
	2400 (94.7)	2200 (86.8)	2000 (78.9)	1800 (71.1)	1600 (63.2)	1400 (55.3)	1200 (47.4)	1000 (39.5)
	Horizontal distance "C", from danger point mm (in)							
2400 (94.7)	-	100 (3.9)	100 (3.9)	100 (3.9)	100 (3.9)	100 (3.9)	100 (3.9)	100 (3.9)
2200 (86.8)	-	250 (9.9)	350 (13.8)	400 (15.8)	500 (19.7)	500 (19.7)	600 (23.7)	600 (23.7)
2000 (78.9)	-	-	350 (13.8)	500 (19.7)	600 (23.7)	700 (27.6)	900 (35.5)	1100 (43.4)
1800 (71.1)	-	-	-	600 (23.7)	900 (35.5)	900 (35.5)	1000 (39.5)	1100 (43.4)
1600 (63.2)	-	-	-	500 (19.7)	900 (35.5)	900 (35.5)	1000 (39.5)	1300 (51.3)
1400 (55.3)	-	-	-	100 (3.9)	800 (31.6)	900 (35.5)	1000 (39.5)	1300 (51.3)
1200 (47.4)	-	-	-	-	500 (19.7)	900 (35.5)	1000 (39.5)	1400 (55.3)
1000 (39.5)	-	-	-	-	300 (11.8)	900 (35.5)	1000 (39.5)	1400 (55.3)
800 (31.6)	-	-	-	-	-	600 (23.7)	900 (35.5)	1300 (51.3)

Downloaded from http://www.everyspec.com

600 (23.7)	-	-	-	-	-	-	500 (19.7)	1200 (47.4)
400 (15.8)	-	-	-	-	-	-	300 (11.8)	1200 (47.4)
200 (7.9)	-	-	-	-	-	-	200 (7.9)	1100 (43.4)

FIGURE 53. Safety barriers.

5.8 Physical accommodation.

5.8.1 General. Design shall ensure physical accommodation, compatibility, operability, and maintainability by the central 90 percent of the target user population. Physical accommodation is defined as having adequate reach, strength, and endurance necessary to perform all physical tasks; adequate clearance for movement, to ingress/egress work area, and perform all required tasks; adequate internal and external visibility to perform all required operations and adequate fit of personal protective equipment to successfully perform all mission duties while receiving optimal protection from adverse environmental threats and conditions (e.g., weather, darkness, lasers, acceleration forces).

5.8.1.1 Systems, equipment, and facilities. Systems, equipment (including life support and emergency escape), and facilities used by operators, maintainers, and supporters shall be designed for full use by the range of service personnel with applicable operational clothing, protective clothing, and specialized equipment.

5.8.1.2 Clothing and personal equipment. Clothing and personal equipment (including protective or specialized equipment worn or carried by the individual) shall be designed and sized to accommodate the size range of using personnel.

5.8.2 Target populations.

5.8.2.1 Regular populations. The population(s) to be accommodated shall include both genders of applicable service and foreign military personnel.

5.8.2.2 Special populations.

5.8.2.2.1 Male only populations. Systems, equipment, and facilities intended for use by males only may limit the population to males only in lieu of the requirements in 5.8.4.

5.8.2.2.2 Selected populations. Where equipment will be used, inclusively or exclusively, by selected or specialized segments of the military population (e.g., Air Force flight crews, Navy divers, disabled), the characteristics of the job population may be used in lieu of the requirements in 5.8.4.

5.8.2.2.3 Foreign military personnel. For systems, equipment, and facilities intended for use by joint-services, the population to be accommodated shall include both genders of applicable foreign-service personnel in lieu of the requirements in 5.8.4.

5.8.2.2.4 Joint service personnel. For systems, equipment, and facilities intended for use by joint services, the population to be accommodated shall include both genders of applicable joint-service personnel in lieu of the requirements in 5.8.4.

5.8.2.3 Maintenance and support personnel. Limits applied by 5.8.2.2 shall not change the need to accommodate maintenance and support personnel.

5.8.3 Design limits.

5.8.3.1 General design criteria. Design shall ensure physical accommodation, compatibility, operability, and maintainability for all physical factors (size, weight, reach, strength, and endurance) by the central 90 percent of the target user population as identified in 5.8.2.

Downloaded from http://www.everyspec.com

5.8.3.2 Special situations. Where failure to accommodate the size or performance of personnel could result in a hazardous condition leading to personnel injury or equipment damage, the design for all physical factors (size, weight, reach, strength, and endurance) shall accommodate the central 99 percent of the target population including both genders.

5.8.4 Anthropometric design. Designers shall take advantage of technologies and capabilities such as human figure modeling and three-dimensional body scan to obtain new data to meet requirements in 5.8.3. Additional anthropometric dimensions for the standing body, seated body, depth and breadth, circumferences and surfaces, hands and feet, and head and face, and extensive additional data can be found in Appendix B, NATICK TR-91/040, and NATICK TR 89/044.

5.8.4.1 Use of anthropometric data. Use of anthropometric data as design criteria shall consider all of the following:

a. The nature, frequency, safety, and difficulty of the related tasks to be performed by the user or wearer of the equipment.

b. The position of the body during performance of these tasks.

c. Mobility or flexibility requirements imposed by these tasks.

d. Increments in the design-critical dimensions imposed by the need to compensate for obstacles and projections.

5.8.4.1.1 Safety and health considerations. Where design limits based on safety and health considerations are more conservative than performance criteria, they shall be given preference.

5.8.4.1.2 Adjustments. Because the above-cited anthropometric data represent nude body measurements, suitable adjustments in design-critical dimensions shall be made for light or heavy clothing, flying suits, helmets, boots, body armor, load-carrying equipment, protective equipment, hydration packs, and other worn or carried items. Additional appropriate factors to be added to dimensions can be found in NATICK/TR 99/012, available through the Defense Technical Information Center. If the appropriate factor is not available in NATICK/TR 99/012, designers shall derive it empirically.

5.8.4.1.3 Clearance dimensions. Clearance dimensions (e.g., minimum dimensions for passageways and accesses) shall accommodate or allow passage of the body or parts of the body to include applicable clothing equipment and must be related to performance of tasks before being substituted for performance criteria. Clearance dimensions shall include adjustments for the task-appropriate clothing, flying suits, helmets, boots, body armor, load-carrying equipment, protective equipment, and other worn or carried items.

5.8.4.1.4 Limiting dimensions and dynamic characteristics. Dimensional and dynamic limits (e.g., maximum limits for reach distance, control movements, test point locations, operating forces) must be related to performance of tasks before being substituted for performance criteria.

5.8.4.1.5 Adjustable dimensions. Seats, restraint systems, safety harnesses, belts, controls or any equipment that must be adjusted for the comfort or performance of the individual user shall be adjustable for the range of personnel using them.

5.8.4.1.6 Multiple dimension accommodation. Anthropometric dimension percentiles are not additive. For accommodation of size, reach, and vision, design parameters shall be defined by either of the following:

a. Using jointed distributions of all design relevant size, reach, and mass variables.

b. Appropriate anthropometric modeling.

5.8.4.1.7 Other application limits. Design shall also take into consideration conditions when the object might be very difficult to handle (slippery), workspace might be less than optimal, or the object must be positioned or handled delicately.

Downloaded from http://www.everyspec.com

5.8.4.1.8 Range of motion. Table XXXVI gives the ranges, in angular degrees, for all voluntary movements the joints of the body can make, as illustrated on figure 54. The designer should remember that these are maximum values; since they were measured with nude personnel, they do not reflect the restrictions clothing would impose. The lower limit shall be used when personnel must operate or maintain a component. The upper limit shall be used in designing for freedom of movement.

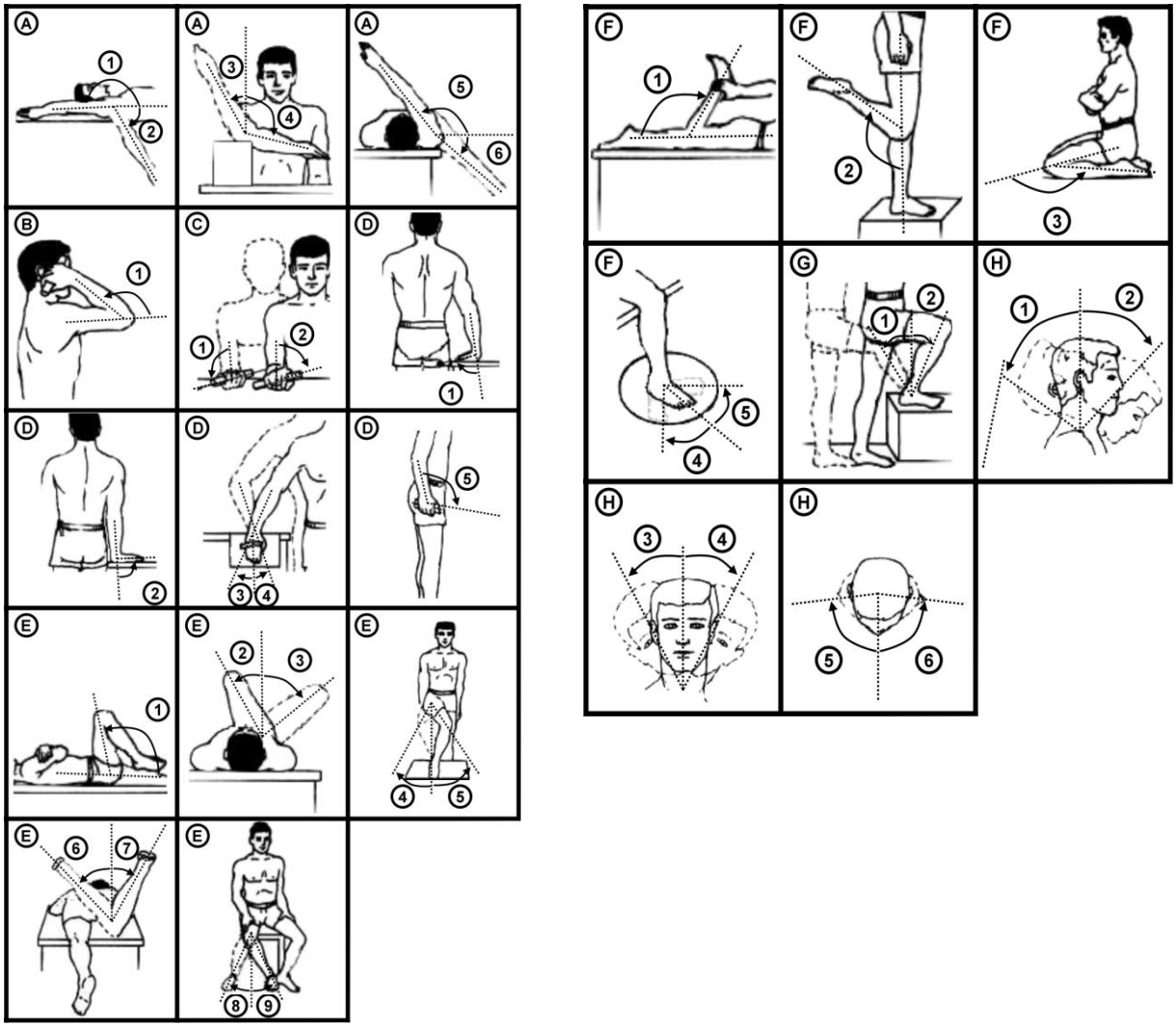

FIGURE 54. Range of human motion.

Downloaded from http://www.everyspec.com

TABLE XXXVI. Range of human motion.

Body member movement		Lower limit (degrees)	Average (degrees)	Upper limit (degrees)
A. Shoulder	1. Flexion	176	188	190
	2. Extension	47	61	75
	3. Lateral rotation	21	34	47
	4. Medial rotation	75	97	119
	5. Horizontal adduction	39	48	57
	6. Horizontal abduction	117	134	151
B. Elbow	1. Flexion	132	142	152
C. Forearm	1. Supination	91	113	135
	2. Pronation	53	77	101
D. Wrist	1. Flexion	78	90	102
	2. Extension	86	99	112
	3. Ulnar deviation	40	47	54
	4. Radial deviation	18	27	36
	5. Wrist carry angle	95	102	109
E. Hip	1. Flexion	100	113	126
	2. Adduction (supine)	19	31	43
	3. Abduction (supine)	41	53	65
	4. Abduction (standing)	16	23	30
	5. Adduction (standing)	15	24	33
	6. Lateral rotation (prone)	24	34	44
	7. Medial rotation (prone)	29	39	49
	8. Medial rotation (sitting)	22	31	40
	9. Lateral rotation (sitting)	21	30	39
F. Knee	1. Flexion (prone)	115	125	135
	2. Flexion (standing)	100	113	126
	3. Flexion (kneeling)	150	159	168
	4. Lateral rotation	31	43	55
	5. Medial rotation	23	35	47
G. Ankle	1. Posterior tibial angle	26	38	50
	2. Anterior tibial angle	28	35	42

Downloaded from http://www.everyspec.com

TABLE XXXVI. Range of human motion – Continued.

Body member movement		Lower limit (degrees)	Average (degrees)	Upper limit (degrees)
H. Neck	1. Extension (backward)	44	61	88
	2. Flexion (forward)	48	60	72
	3. Lateral flexion (right)	34	41	48
	4. Lateral flexion (left)	34	41	48
	5. Rotation (right)	65	79	93
	6. Rotation (left)	65	79	93

NOTES:

1. These values are based on the nude body. The ranges are larger than they would be for clothed and mission equipped personnel.
2. Flexion: Bending or decreasing the angle between parts of the body.
3. Extension: Straightening or increasing the angle between parts of the body.
4 Adduction: Moving toward the midline of the body.
5 Abduction: Moving away from the midline of the body.
6. Medial rotation: Turning toward the midplane of the body.
7. Lateral Rotation: Turning away from the midplane of the body.
8. Pronation: Rotation of the palm of the hand downward.
9. Supination: Rotation of the palm of the hand upward.
10. Radialdeviation: Hand moving toward radius (bone).
11. Ulnar deviation: Hand moving toward ulna (bone).
12. Plantarflexion: Movement that increases angle between the foot and leg.
13. Dorsiflexion: Movement that decreases the angle between the foot and leg.
14. Tibial angle (posterior and anterior) is relative to a reference line formed at a right angle to the base of the foot.

5.8.4.2 Whole body. All operating positions shall allow enough space to move the trunk of the target user's body. When large forces (more than 13.6 kilograms (30 pounds)) or large control displacements (more than 380 millimeters (15 inches) in a fore-aft direction) are required, the target user shall have enough space to move his entire body.

5.8.5 Strength. Strength and endurance shall be separately accommodated for the range of male and female strength and endurance of the population.

5.8.5.1 Guidance. Because of the low correlation between strength and size, size shall not be used to determine accommodation of strength and endurance; rather, strength shall be considered separately. Specifically, it is very unlikely that military members of minimum size also have minimum strength and endurance.

5.8.5.2 Operability. The strength and endurance performance characteristics of weakest personnel performing the actual or equivalent task shall be accommodated to ensure operability. The maximum force that can be applied will depend on such factors as the type of control, the body member used to operate it, the position of this body member during control operations, the general position of the body, and whether or not support is provided by backrests. Because human strength and endurance are specific to the task performed, accommodation of operability must be based on performance of the equivalent activity. Where accommodation is based on strength or endurance of a different activity, there must be a valid relation between the performance of the two activities.

5.8.5.3 Break strength. Where critical items may be damaged by the exertion of large forces, the break strength shall be not less than can be exerted by the strongest person.

Downloaded from http://www.everyspec.com

5.8.6 Human strength and handling capacity.

5.8.6.1 Exerted forces. The maximum amount of force or resistance designed into a control shall be determined by the greatest amount of force that can be exerted by the weakest person likely to operate the control. The maximum force that can be applied will depend on such factors as the type of control, the body member used to operate it, the position of this body member during control operations, the general position of the body, and whether or not support is provided by backrests.

5.8.6.2 Load carrying.

5.8.6.2.1 Weight distribution. Individual portions of equipment shall be designed so that, when carried, the weight of the load will be distributed effectively through as many appropriate muscle groups as possible.

5.8.6.2.2 Pressure avoidance. Pressure shall be avoided or minimized on sensitive areas, including large blood vessels, nerves, and areas lacking muscular padding.

5.8.6.2.3 Weight and distribution compatibility. Design of load-carrying systems shall be compatible with the weight and distribution of individual items to be carried by the user. The limit on weight of the items to be carried varies according to the climatic zone, mission to be performed, and occupational specialty. (See table XXXVII for weights of representative individual items that an infantry rifleman carries in temperate hot weather areas.)

5.8.6.2.4 Quick-release capability. Load carrying systems shall be provided with a quick-release capability.

5.8.6.2.5 Portability. In general, "portable" refers to an item that is carried a distance of not more than 2.0 kilometers (1.24 miles). (For items to be carried up to 10 meters (33 feet), see 5.8.6.3.8.)

a. Individual weight. Individual portions of equipment shall not exceed 16 kilograms (35 pounds), with load balanced and distributed over many appropriate muscle groups, unless it is not necessary for the individual carrying the load to maintain the pace of an infantry movement.

b. Total weight. Total weight shall meet the following:

(1) Desired total weight. The total load carried by an individual, including clothing, weapons, and equipment, should not exceed 30 percent of the target user body weight for close combat operations or 45 percent for marching.

(2) Excessive total weight. When the total load carried by an individual must exceed 30 percent of the target user body weight for close combat operations or 45 percent for marching, the load to be carried shall be identified by user trials with the target population, modeling and simulation, and existing data and literature, while focusing on performance characteristics of the soldier or Marine as a system conducting combat tasks.

(3) Low body weight. Where personnel with 5th percentile body weight must be accommodated, the total load for close combat operations shall not exceed 18.5 kilograms (41 pounds) and 27.7 kilograms (61 pounds) for marching.

b. Variability. The weight of items to be carried varies according to the climatic zone, mission to be performed, and occupational specialty. Table XXXVII provides one example of representative items that an infantry rifleman carries in temperate areas. This list is only representative; therefore, designers shall determine the typical load for the mission, climate, and occupational specialty for which they are designing.

c. Lifting aids. When necessary, lifting aids shall be provided to permit a second person to assist the porter in placing the load on the body.

(1) Non-backpack units. Units for which no backpacking aids are required shall be equipped with handles suitable for two-handed lifting and carrying.

(2) Backpacks and backpacking aids. One-person back-packed loads over 20 kilograms (44 pounds) shall be designed (and, if necessary, provided with lifting aids) to permit a second person to assist the porter in placing the load on the body. Backpacking aids shall distribute the load over as many muscle groups as possible by means of buttock and hip supports in addition to padded shoulder straps. Backpacking aids shall bring the center of gravity of the load as close to the porter's spine at the waistline as possible without any part of the load contacting the body.

Downloaded from http://www.everyspec.com

(3) Load-carrying design. Load-carrying design shall minimize pressure or compression to the chest or armpits. Load-carrying design shall eliminate local strain by transmitting weight to the ground through bone.

(4) Interference with movement. Aids shall not produce laterally unbalanced loads, interfere with normal head movements, limit squatting, interfere with walking or climbing over low obstacles, interfere with movements of the shoulder girdle, produce strain on the shoulder muscle, or interfere with regulation of body temperature.

d. Configuration. The load shall be designed to permit freedom of movement.

e. Projections. The shape of the load shall be free of sharp edges or projections that may be harmful to the user or snag on undergrowth. Covers or cases may be provided to meet this requirement.

f. Shape. The shape and weight of the load shall not interfere with (a) the length of step, (b) movements of the head, (c) the ability to raise and lower the load when going over obstacles, (d) the ability to see where the feet are placed when walking, (e) the ability to squat, (f) regulation of body temperature, or (g) the maintenance of normal posture.

g. Carrying by two persons. Where the load is designed for carrying by two persons, a combination of stretcher type handles and shoulder support shall be used, if feasible.

Downloaded from http://www.everyspec.com

TABLE XXXVII. Typical fighting and existence loads (temperate zones).

Fighting load	Approximate weight	
	kg	lbs
Clothing		
Personal Armor System for Ground Troops (PASGT) helmet	1.5	3.3
Battle dress uniform	1.73	3.8
PASGT vest	3.86	8.5
Underwear and socks	0.22	0.48
Belt with buckle	0.2	0.44
Boots, leather (Direct Molded Sole (DMS))	1.52	3.36
Clothing subtotal	9.03	19.88
Equipment		
Rifle M16A1 with 30-round magazine and sling	3.59	7.91
Ammunition pouches (2 each) with 180 rounds in 6 magazines	3.21	7.07
Hand grenades (2 each)	0.91	2.0
Light Anti-tank Weapon (LAW) (2 each) or Improved Light Anti-tank Weapon (ILAW) (1 each)	3.86	8.5
Canteen (1.0 quart filled) with cup and cover	1.63	3.6
Water purification tablets	0.03	0.06
Individual equipment belt, first aid packet with case and suspenders	0.72	1.59
Entrenching tool with carrier	1.14	2.52
Bayonet M7 with scabbard	0.59	1.3
Mask, chemical/biological (CB) protective, with hood	1.35	2.97
Poncho	0.77	1.7
Equipment subtotal	17.8	39.22
Existence Load		
All-purpose Lightweight Individual Carrying Equipment (ALICE) pack medium with straps	1.12	2.46
Chemical protective overgarment with gloves and boots	2.61	5.75
Canteen (1.0 quart filled) with cup and cover (additional)	1.63	3.6
Cap, utility	0.1	0.22
Underwear and socks	0.22	0.48
Personal hygiene kit	1.2	2.64
Rations MRE (3 each)	1.33	2.94
Bag, sleeping, intermediate cold	3.4	7.5
Mattress, pneumatic insulated	1.59	3.5
Jacket, field (1 each), with gloves, leather with wool insert, 1 pair	1.94	4.28
Bag, waterproof (1 each)	0.34	0.75
Existence load subtotal	15.48	34.12

Downloaded from http://www.everyspec.com

5.8.6.3 Lifting limits, push/pull.

5.8.6.3.1 Lifting limits. The weight limits in table XXXVIII show the maximum design weight limits for loads lifted, lowered, or carried while being grasped by two hands. These values were derived from performance capacity data from a young, healthy population and do not necessarily represent thresholds for injury risk.

a. Maximum values for one lifter. The weight limits in table XXXVIII shall be used as maximum values in determining the design weight of items requiring one person lifting with one or two hands.

b. Maximum values for two lifters. Double the weight limits in table XXXVIII shall be used as the maximum values in determining the design weight of items requiring two-person lifting, provided the load is uniformly distributed between the two lifters.

c. Non-uniform weight distribution. If the weight of the load is not uniformly distributed, the weight limit applies to the heavier lift point. Where three or more persons are lifting simultaneously, not more than 75 percent of the one-person value may be added for each additional lifter, provided that the object lifted is sufficiently large that the lifters do not interfere with one another while lifting and that adequate grip can be attained by each person.

d. Lifting height limits. Where it is not possible to define the height to which an object will be lifted in operational use, the limit wherein the object is lifted to shoulder height (1.5 meters (5.0 feet) above floor) shall be used rather than the more permissive bench-height (0.9 meter (3.0 feet) above floor) value or the less permissive above-shoulder-height (1.5 meters (5.0 feet) above floor) value. The values in table XXXVIII are applicable to objects with or without handles.

TABLE XXXVIII. Maximum design weight limits.

Handling Function	**Population**	
	Male and female	**Male only**
Lift an object from the floor and place it on a surface equal to or greater than 152 cm (5.0 ft) above the floor	14 kg (31 lb)	21.9 kg (48 lb)
Lift an object from the floor and place it on a surface not greater than 152 cm (5.0 ft) above the floor	16.8 kg (37 lb)	25.4 kg (56 lb)
Lift an object from the floor and place it on a surface not greater than 91 cm (3.0 ft) above the floor	20 kg (44 lb)	39.5 kg (87 lb)
Carry an object 10 m (33 ft) or less	19 kg (42 lb)	37.2 kg (82 lb)

5.8.6.3.2 Lifting frequency. The equipment weight limits in table XXXVIII are not for repetitive lifting as found, for example, in loading or unloading transport vehicles. If the frequency of lift exceeds one lift in 5.0 minutes or 20 lifts per 8 hours, the permissible weight limits shall be reduced by (8.33 x LF) percent, where LF is the lift frequency in lifts per minute. For example, if the lift frequency is 6 lifts per minute, then the maximum permissible weight is reduced by 50 percent (8.33 x 6.0 = 50). To calculate the Frequent Lift Limit use the following equation:

Frequent Lift Limit = (table XXXVIII Lift Limit) * (1 – (8.33 * Lifts Per Minute)/100)

5.8.6.3.3 Load size. The maximum permissible weight lift limits in table XXXVIII apply to an object with uniform mass distribution and a compact size not exceeding 46 centimeters (18 inches) high, 46 centimeters (18 inches) wide, and 30 centimeters (12 inches) deep (away from the lifter).

a. Exceeds by 30 centimeters (12 inches). If the depth of the object exceeds 30 centimeters (12 inches), the permissible weight shall be reduced by 33 percent.

b. Exceeds by 91 centimeters (36 inches). If the depth of the object exceeds 91 centimeters (36 inches), the permissible weight shall be reduced by 50 percent.

c. Exceeds by 122 centimeters (48 inches). If the depth of the object exceeds 122 centimeters (48 inches), the permissible weight shall be reduced by 66 percent.

Downloaded from http://www.everyspec.com

5.8.6.3.4 Twisting. Lifting tasks shall minimize or eliminate twisting of the body during the lifting task. If twisting motion is required, it shall be limited to a maximum of 30 degrees left or right of body centerline. If the body has to twist through more than 15 degrees and up to 45 degrees, the recommended acceptable loads shall be reduced by 20 percent. However, twisting while lifting, lowering, or supporting a load is not recommended.

5.8.6.3.5 Obstacles. The values in table XXXVIII assume that there are no obstacles between the person lifting and the shelf, table, bench, or other surface on which the object is to be placed. Where a lower protruding shelf or other obstacle limits the lifter's approach to the desired surface, the weight limit of the object shall be reduced by 33 percent.

5.8.6.3.6 Lifting team designations. Lifting team designations shall meet the following:

a. Number of lifters. The number of lifters assigned to a handle a load shall not exceed the object's capacity to support the team.

b. Space for lifters. Lifters shall be allotted sufficient space about the perimeter of the object to accommodate them physically and to permit each member to move without interference from adjacent team members.

c. Calculation. Maximum permissible number of lifters assignable to a lifting team for either one-handed or two-handed lifts shall be calculated by rounding to the nearest whole number the result of dividing the size of the perimeter in inches by 24. For example, the maximum permissible number of lifters that could be assigned to lift an object with length 25 inches and width 35 inches would be: (2 x 25 + 2 x 35) / 24 = 5 lifters.

5.8.6.3.7 Carrying limits for distances up to 10 meters (33 feet). The weight limit in table XXXVIII shall be used as the maximum value in determining the design weight of items requiring one-person carrying of objects a distance of up to 10 meters (33 feet). The maximum permissible weight for carrying also applies to an object with a handle on top, such as a tool box, which usually is carried at the side with one hand.

a. Assumptions. In all cases involving carrying, it is assumed that the object is first lifted from the floor, carried a distance, and placed on the floor or on another surface not higher than 91 centimeters (36 inches). If the final lift is to a higher height, the 152-centimeter (5.0-foot) lift height shall be applied as the more limiting case.

b. Two-person carry. Double the weight carrying limit shall be used as the maximum value in determining the design weight of items requiring two-person carrying, provided the load is uniformly distributed between the two carriers.

c. More than two-person carry. Where three or more persons are carrying a load together, not more than 75 percent of the one-person value may be added for each additional person, provided that the object is sufficiently large that the workers do not interfere with one another while carrying the load.

5.8.6.3.8 Carrying limits for distances over 10 meters (33 feet). When an object is to be carried more than 10 meters (33 feet), the limits in table XXXIX shall apply.

TABLE XXXIX. Carrying limits for distances over 10 meters (33 feet).

	Weight limits, kg (lb) male and female
Package carried at side with one hand (tool chest, container with handles, and so forth).	13.6 (30)
Package with irregular sides (electronic equipment chassis and so forth).	11.4 (25)
Box or other item with two hands.	14 (35)

5.8.6.3.9 Carrying frequency. The reduction formula expressed in 5.8.6.3.2 shall be applied to carrying frequency in the same manner.

5.8.6.3.10 Object carry size. The reduction formula expressed in 5.8.6.3.3 shall be applied to size of objects to be carried in the same manner as for load size.

Downloaded from http://www.everyspec.com

5.8.6.3.11 User population. The "male and female" population values in table XXXIX shall apply to any object to be lifted or carried manually; the "male only" population values apply only as specified by the procuring activity (see 6.2).

5.8.6.3.12 Labeling. Items weighing more than the one-person lift or carry values for the "male and female" population of table XXXVIII shall be prominently labeled with weight of the object and lift limitation (e.g., mechanical or two-person lift, three-person lift). Where mechanical or power lift is required, hoist and lift points shall be provided and clearly labeled.

5.8.6.4 Hand trucks and wheeled dollies.

5.8.6.4.1 General. In areas where two-wheeled hand trucks and four-wheeled dollies will be used to move loads, the walking surface shall be smooth enough to allow travel of the devices.

5.8.6.4.2 Maximum incline. Dollies and hand trucks shall not be used to move loads up and down stairs or ramps with an angle of inclination greater than 7 degrees.

5.8.6.4.3 Hand trucks turning radius. The turning radius for hand trucks shall be at least 121.9 centimeters (48 inches).

5.8.6.4.4 Casters for dollies. Dollies shall have casters, with swivel casters at the handle end of the dolly.

5.8.6.4.5 Space required. When dollies or hand trucks are required, clear space shall be provided within the area of their use.

5.8.6.5 Push and pull forces.

5.8.6.5.1 Horizontal. Manual horizontal push and pull forces required, to be applied initially to an object to set it in motion or to be sustained over a short period of time, shall not exceed the values of table XL, as applicable, or those given in table XLI, if more appropriate to the force and movement characteristics of the task. The values shown in table XL apply to males only and shall be modified for females.

Downloaded from http://www.everyspec.com

TABLE XL. Horizontal push and pull forces exertable intermittently or for short periods of time (male personnel).

Horizontal force [1/]	Applied with [2/]	Condition (m = coefficient of friction)
100 N (25 lb) push or pull	both hands or one shoulder or the back	low traction: $0.2 < \mu < 0.3$
200 N (45 lb) push or pull	both hands or one shoulder or the back	medium traction: $\mu \sim 0.6$
250 N (55 lb) push	one hand	if braced against a vertical wall 51 – 152 cm (20 - 60 in) from and parallel to the push panel
300 N (70 lb) push or pull	both hands or one shoulder or the back	high traction: $\mu > 0.9$
500 N (110 lb) push or pull	both hands or one shoulder or the back	if braced against a vertical wall 51 – 178 cm (20 - 70 in) from and parallel to the panel or if anchoring the feet on a perfectly nonslip ground (like a footrest)
750 N (165 lb) push	the back	if braced against a vertical wall 51 – 178 cm (20 - 70 in) from and parallel to the panel or if anchoring the feet on a perfectly nonslip ground (like a footrest)

FOOTNOTES:

1/ May be doubled for two and tripled for three users pushing simultaneously. For the fourth and each additional user, not more than 75% of their push capability shall be added.

2/ See figure 55 for examples.

NOTES

1. Values are predicated upon a suitable surface for force exertion, i.e., a vertical, rough surface, approximately 40 cm (16 in) wide, and 510 – 127 cm (20 – 50 in) above the floor to allow force application with the hands, the shoulder, or the back.
2. Where applicable, force requirements shall be modified for females. Two-thirds of each value shown is considered to be a reasonable adjustment.

Downloaded from http://www.everyspec.com

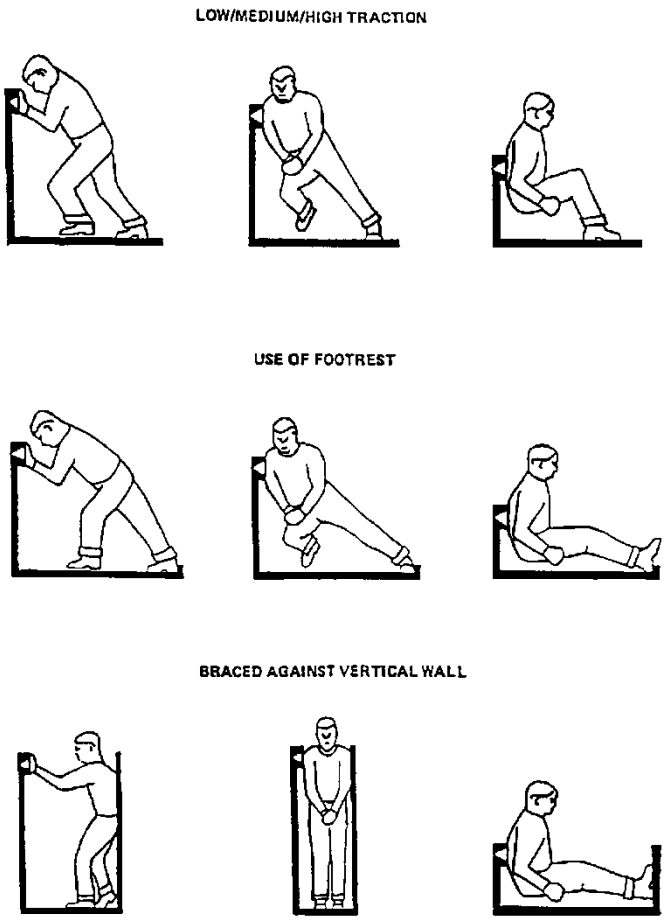

FIGURE 55. Examples of push forces.

Downloaded from http://www.everyspec.com

TABLE XLI. Static muscle strength.

Strength measurements (see figure 56)			Values in N (lbs)			
			5th Percentile		95th Percentile	
			Male	Female	Male	Female
A. Standing two-handed pull	38 cm level	Mean force	738 (166)	331 (74)	1354 (304)	818 (184)
		Peak force	845 (190)	397 (89)	1437 (323)	888 (200)
B. Standing two-handed pull	50 cm level	Mean force	758 (170)	326 (73)	1342 (302)	841 (189)
		Peak force	831 (187)	374 (84)	1442 (324)	905 (203)
C. Standing two-handed pull	100 cm level	Mean force	444 (100)	185 (42)	921 (209)	443 (100)
		Peak force	504 (113)	218 (49)	988 (222)	493 (111)
D. Standing two-handed push	150 cm level	Mean force	409 (92)	153 (34)	1017 (229)	380 (85)
		Peak force	473 (106)	188 (42)	1094 (246)	430 (97)
E. Standing one-handed pull	100 cm level	Mean force	215 (48)	103 (23)	628 (141)	284 (64)
		Peak force	259 (58)	132 (30)	724 (163)	322 (72)
F. Seated one-handed pull	Centerline, 45 cm level	Mean force	227 (51)	106 (24)	678 (152)	392 (88)
		Peak force	273 (61)	126 (29)	758 (170)	451 (101)
G. Seated one-handed pull	Side, 45 cm level	Mean force	240 (54)	109 (25)	604 (136)	337 (76)
		Peak force	273 (61)	134 (30)	659 (148)	395 (89)
H. Seated two-handed pull	Centerline, 38 cm level	Mean force	595 (134)	242 (54)	1221 (274)	770 (173)
		Peak force	699 (157)	285 (64)	1324 (298)	842 (189)
I. Seated two-handed pull	Centerline, 50 cm level	Mean force	525 (118)	204 (46)	1052 (237)	632 (142)
		Peak force	596 (134)	237 (53)	1189 (267)	697 (157)

Downloaded from http://www.everyspec.com

A. STANDING TWO–HANDED PULL: 38 cm (15") LEVEL

STANDING WITH FEET 45 cm (18") APART AND KNEES BENT. BENDING AT WAIST, GRASPING BOTH SIDES OF 45 cm (18") LONG HANDLE LOCATED DIRECTLY IN FRONT, 38 cm (15") ABOVE STANDING SURFACE, AND PULLING, USING PRIMARILY ARMS, SHOULDERS AND LEGS.

B. STANDING TWO–HANDED PULL: 50 cm (20") LEVEL

STANDING WITH FEET 45 cm (18") APART AND KNEES STRAIGHT. BENDING AT WAIST, GRASPING BOTH SIDES OF 45 cm (18") LONG HANDLE LOCATED DIRECTLY IN FRONT, 50 cm (20") ABOVE STANDING SURFACE, AND PULLING, USING PRIMARILY ARMS AND SHOULDERS.

C. STANDING TWO–HANDED PULL: 100 cm (39") LEVEL

STANDING ERECT WITH FEET 45 cm (18") APART, GRASPING BOTH SIDES OF 45 cm (18") LONG HANDLE LOCATED DIRECTLY IN FRONT, 100 cm (39") ABOVE STANDING SURFACE, AND PULLING, USING THE ARMS.

FIGURE 56. Static muscle strength.

Downloaded from http://www.everyspec.com

D. STANDING TWO–HANDED PUSH: 150 cm (59") LEVEL

STANDING ERECT WITH FEET 45 cm (18") APART, GRASPING FROM BELOW, BOTH SIDES OF 45 cm (18") LONG HANDLE LOCATED DIRECTLY IN FRONT, 150 cm (59") ABOVE STANDING SURFACE. PUSHING UPWARD USING ARMS AND SHOULDERS.

E. STANDING ONE–HANDED PULL: 100 cm (39") LEVEL

STANDING ERECT WITH FEET 15 cm (6") APART, DOMINANT HAND GRASPING UNDERSIDE OF D–RING LOCATED DIRECTLY TO THE SIDE, 100 cm (39") ABOVE STANDING SURFACE. PULLING UPWARD WHILE KEEPING SHOULDER SQUARE AND OTHER ARM RELAXED AT SIDE.

F. SEATED ONE–HANDED PULL: SEAT CENTERLINE 45 cm (18") LEVEL

SITTING ERECT WITH FEET 55 cm (22") APART, DOMINANT HAND GRASPING UNDERSIDE OF D–RING LOCATED DIRECTLY TO THE FRONT, 45 cm (18") ABOVE THE FLOOR. PULLING UPWARD WHILE KEEPING SHOULDERS SQUARE AND OTHER ARM RESTING IN LAP.

FIGURE 56. Static muscle strength – Continued.

Downloaded from http://www.everyspec.com

G. SEATED ONE–HANDED PULL: SIDE OF SEAT, 45 cm (18") LEVEL

SITTING ERECT WITH FEET 55 cm (22") APART, DOMINANT HAND GRASPING UNDERSIDE OF D–RING LOCATED A SHORT DISTANCE TO SIDE, 45 cm (18") ABOVE THE FLOOR. PULLING UPWARD WHILE KEEPING SHOULDERS SQUARE AND OTHER ARM RESTING IN LAP.

H. SEATED TWO–HANDED PULL: CENTERLINE OF SEAT, 38 cm (15") LEVEL

SITTING ERECT WITH FEET 55 cm (22") APART. BENDING SLIGHTLY AT WAIST, GRASPING BOTH SIDES OF 15 cm (6") LONG HANDLE LOCATED DIRECTLY TO THE FRONT, 38 cm (15") ABOVE THE FLOOR. PULLING UPWARD, USING ARMS AND SHOULDERS, KEEPING ARMS OFF THIGHS.

I. SEATED TWO–HANDED PULL: CENTERLINE OF SEAT, 50 cm (20") LEVEL

SITTING ERECT WITH FEET 55 cm (22") APART. BENDING SLIGHTLY AT WAIST, GRASPING BOTH SIDES OF 15 cm (6") LONG HANDLE LOCATED DIRECTLY TO THE FRONT, 50 cm (20") ABOVE THE FLOOR. PULLING UPWARD, USING ARMS AND SHOULDERS, KEEPING ARMS OFF THIGHS.

FIGURE 56. Static muscle strength – Continued.

5.8.6.5.2 Vertical. Manual vertical push and pull forces required shall not exceed the applicable 5th percentile peak or mean force values of table XL, or those given in table XLI if more appropriate to the force and movement characteristics of the task.

5.8.6.5.3 Handles and grasp areas. Handles and grasp areas shall meet the following:

a. General. All items designed to be carried or removed and replaced shall be provided with handles or other suitable means for grasping, handling, and carrying (where appropriate, by gloved or mittened hand). Items requiring handling shall be provided with not less than two handles or one handle and one grasp area. Items weighing less than 4.5 kilograms (10 pounds) whose form factor permits them to be handled easily shall be exempt from this requirement unless otherwise specified by the procuring activity (see 6.2).

b. Location. Handles, grasp areas, or hoist points shall be located above the center of gravity and in a manner to preclude uncontrolled swinging or tilting when lifted. Handles, grasp areas, or hoist points shall be located to provide at least 5.0 centimeters (2.0 inches) of clearance from obstructions during handling. The location of handles shall not interfere with installing, removing, operating, or maintaining the equipment.

c. Non-fixed handles. Non-fixed handles (e.g., hinged or foldout) shall have a stop position for holding the handle perpendicular to the surface on which it is mounted. Non-fixed handles shall be capable of being placed into carrying position by one hand (where appropriate, by a gloved or mittened hand).

d. Grasp surface. Where an item's installation requires that its bottom surface be used as a handhold during removal or installation, a nonslip grasp surface (e.g., grooved, knurled, or frictional) shall be provided.

Downloaded from http://www.everyspec.com

e. Handle dimensions. Handles which are to be used with mittened, gloved, or ungloved hands shall equal or exceed the minimum applicable dimensions shown on figure 57.

f. Handle and grasp area force requirements. Force requirements to operate handle and grasp areas other than the controls covered by 5.1.4.3 shall not exceed the values on figure 23.

g. Handle material. Handles or grasp areas used with bare hands shall have surfaces that are not thermally (see 5.7.6.9) or electrically conductive. The surface shall be sufficiently hard to prevent embedding of grit and grime during normal use.

h. Handle shape. Handles that are shaped to facilitate being held by the hand (e.g., one-hand bar or T-bar) shall be used when items must be carried frequently or for long periods.

ILLUSTRATION	TYPE OF HANDLE	DIMENSIONS IN mm (inches)								
		(Bare Hand)			(Gloved Hand)			(Mittened Hand)		
		X	Y	Z	X	Y	Z	X	Y	Z
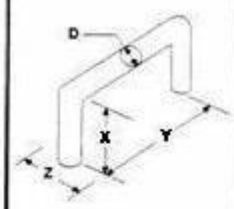	Two-finger bar	32 (1 1/4)	65 (2 1/2)	75 (3)	38 (1 1/2)	75 (3)	75 (3)	Not applicable		
	One-hand bar	48 (1 7/8)	111 (4 3/8)	75 (3)	50 (2)	125 (5)	100 (4)	75 (3)	135 (5 1/4)	150 (6)
	Two-hand bar	48 (1 7/8)	215 (8 1/2)	75 (3)	50 (2)	270 (10 1/2)	100 (4)	75 (3)	280 (11)	150 (6)
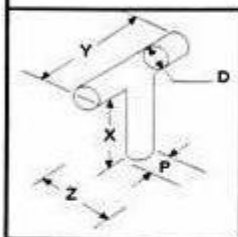	T-bar	38 (1 1/2)	100 (4)	75 (3)	50 (2)	115 (4 1/2)	100 (4)	Not applicable		
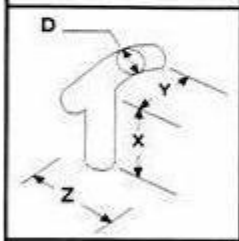	J-bar	50 (2)	100 (4)	75 (3)	50 (2)	115 (4 1/2)	100 (4)	75 (3)	125 (5)	150 (6)
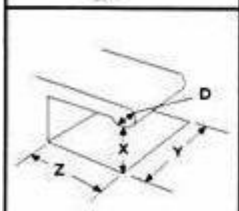	Two-finger recess	32 (1 1/4)	65 (2 1/2)	50 (2)	38 (1 1/3)	75 (3)	50 (2)	Not applicable		
	One-hand recess	50 (2)	110 (4 1/4)	90 (3 1/2)	90 (3 1/2)	135 (5 1/4)	100 (4)	90 (3 1/2)	135 (5 1/4)	125 (5)

Curvature of Handle or Edge	Weight of item	Minimum Diameter	
(DOES NOT PRECLUDE USE OF OVAL HANDLES)	Up to 15 lbs (6.8 kg) 15 to 20 lbs (6.8 to 9.0 kg) 20 to 40 lbs (9.0 to 18 kg) Over 40 lbs (over 18 kg) T-bar Post	D - 6 mm (1/4 in.) D - 13 mm (1/2 in.) D - 19 mm (3/4 in.) D - 25 mm (1 in.) T - 13 mm (1/2 in.)	Gripping efficiency is best if finger can curl around handle or edge to any angle of 2/3 π rad 120°) or more.

FIGURE 57. Minimum handle dimensions.

Downloaded from http://www.everyspec.com

5.8.6.5.4 Mounting. Equipment configuration shall preclude improper mounting. Items maintained at the organizational level shall be replaceable using only common hand tools. Replaceable items shall be removable along a straight or slightly curved line, rather than through an angle.

5.9 Maintenance accessibility.

5.9.1 General. Additional guidance on design for maintainability can be found in A.2.

5.9.1.1 Standardization. Standard parts shall be used whenever practicable.

5.9.1.2 Parts selection. Parts selected shall meet the human engineering criteria herein.

5.9.1.3 Tools. Equipment shall be designed to minimize the numbers, types, and complexity of tools required for maintenance. The design shall provide for effective use of tools through their full range of motion. Special tools shall be used only when common hand tools cannot be used, when they provide significant advantage over common hand tools, or where required by security considerations. Additional guidance on the design of tools can be found in A.3.

5.9.1.4 Securing tools. Special tools required for operational adjustment maintenance shall be securely mounted within the equipment in a readily accessible location.

5.9.1.5 Grip span. Grip span for tools requiring exertion of high force should be approximately 75 millimeters (3.0 inches) and shall be not greater than 100 millimeters (4.0 inches).

5.9.1.6 Modular replacement. Equipment shall be designed to be replaced as modular packages.

5.9.1.7 Ease of removal. Equipment shall be configured for removal and replacement by one person where permitted by structural, functional, and weight limitations (see 5.8.6.3).

5.9.1.7.1 Removal and replacement of stowed items. Stowed items shall be capable of being removed and replaced without having to remove or replace other stowed items or components of the system. Additional guidance on the stowage of equipment can be found in A.7.

5.9.1.7.2 Retaining devices. Items shall be capable of being stowed and removed under all environmental conditions. The retaining devices shall be simple, capable of quick removal and replacement, and not require the use of tools. Retaining devices shall be attached to either the stowage space or the stowed item to prevent loss.

5.9.1.8 Separate adjustability. It shall be possible to individually check and adjust each item or function of an item.

5.9.1.9 Malfunction identification. Equipment design shall facilitate rapid and positive fault detection and isolation of defective items.

5.9.1.10 Operational environment. Equipment shall be capable of being removed, replaced, repaired, assembled and disassembled in its operational environment by personnel wearing any clothing and equipment appropriate to the environment and maintenance concept, including CBRNE protective clothing.

5.9.1.11 Error-proof design. Design shall incorporate error-proofing in equipment mounting, installing, interchanging, connecting, and operating.

5.9.1.11.1 Physical features. Equipment shall include physical features (e.g., supports, guides, size or shape differences, fastener locations, alignment pins) that prevent improper mounting.

5.9.1.11.2 Absence of physical features. In the absence of physical features, equipment shall be labeled or coded to identify proper mounting, placement, and alignment.

5.9.1.11.3 Same form and function. Equipment that have the same form and function shall be interchangeable throughout a system and related systems.

5.9.1.11.4 Different form and function. If equipment is not interchangeable functionally, it shall not be interchangeable physically.

Downloaded from http://www.everyspec.com

5.9.1.11.5 Connectors. Connectors serving the same or similar functions shall be designed to preclude mismating or misalignment.

5.9.1.11.6 Prevent damage to equipment. Design, location, procedural guidance, and suitable warning labels shall be provided to prevent damage to equipment while it is being handled, installed, operated, or maintained.

5.9.1.12 Ease of access. Insofar as possible, equipment design and installation shall provide the maintainer with complete visual and physical access and a favorable working level for all parts of a system on which maintenance is performed, including workstand interfaces, support equipment interfaces, access openings, adjustment points, test points, servicing points, and connections.

5.9.1.13 Safety. Emergency shutdown devices, lockable controls, electrical cutout switches, or warning signs or guards shall be positioned to ensure safety of maintainers when it is necessary to perform maintenance on or near a live/working system.

5.9.1.14 Delicate items. Items susceptible to maintenance-induced damage, (e.g., rough handling, static electricity, abrasion, contamination) shall be clearly identified and physically and procedurally guarded from abuse.

5.9.1.15 Work from ladders. Items to be maintained from a ladder shall require only one hand.

5.9.1.16 Maintenance of elevated structures. Maintenance on antennae, masts, lights, and other elevated structures shall be performed from a permanent or temporary work platform, vertical ladder with climber safety rail, work basket supported by a crane, or other similar stable standing surface.

5.9.2 Mounting of items within units.

5.9.2.1 General. Units shall be located so no other equipment has to be removed to gain access to them.

5.9.2.1.1 Accessibility of components. All components shall be laid out so they are accessible with the emphasis for easy access placed on items that require frequent inspection and maintenance.

5.9.2.1.2 Removal of functioning components or parts. It shall not be necessary to remove a part or component that is functioning to remove, repair, or maintain a part or component that is not functioning.

5.9.2.1.3 Components maintained by same technician. Components maintained by the same technician shall be grouped together so that only a minimum of moving from position to position is necessary during system checking.

5.9.2.1.4 Frequent access. Components that require frequent visual inspection, check points, adjustment points, cable-end connectors, and labels shall be located in positions that can be easily viewed.

5.9.2.1.5 Safety. All components shall be located to minimize the possibility of equipment damage or personnel injury.

5.9.2.2 Stacking avoidance. Whenever possible, units shall not be stacked.

5.9.2.2.1 Mounted in an array. Whenever possible, parts shall be mounted in an orderly array on a “two-dimensional” surface, rather than stacked (i.e., a lower layer should not support an upper layer) so subassemblies do not have to be removed to access other subassemblies within the equipment.

5.9.2.2.2 Stacking necessary. If stacking is necessary because of space limitations, the unit requiring the least frequent access shall be placed in the back or on the bottom.

5.9.2.3 Similar items. Similar items shall utilize a common mounting design and orientation within the unit. This mounting design shall preclude the interchange of items which are not functionally interchangeable.

5.9.2.4 Hinge-mounted units. Small hinge-mounted units, which require access to the back, shall be free to open their full distance. These units shall also be capable of remaining open without being held.

5.9.2.5 Frames and structural members. Frames and structural members shall not interfere with maintenance and operational personnel reaching components they have to maintain, inspect, or operate.

Downloaded from http://www.everyspec.com

5.9.2.6 Fuses. Fuses shall be located so they can be seen and replaced without tools or removing other parts or subassemblies.

5.9.3 Adjustment controls. Controls required for maintenance purposes shall comply with the basic control design requirements (see 5.1) and labeling requirements (see 5.4).

5.9.3.1 Knob adjustments. Knobs, rather than screwdriver controls, shall be used whenever adjustments must be performed more often than once per month and where access, weight, and related considerations permit their use.

5.9.3.2 Screwdriver adjustments. Screwdriver adjustments made without visual access are permissible only if mechanical guides are provided to align the screwdriver. Screw travel shall be limited to prevent the screw from falling out of its intended position.

5.9.3.3 Reference scale for adjustment controls. A scale or other appropriate reference shall be provided for all adjustment controls. Reference scales shall be readily visible to the person making the adjustment. Mirrors or flashlights shall not be required for adjustments.

5.9.3.4 Control limits. Calibration or adjustment controls which are intended to have a limited degree of motion shall have mechanical stops sufficiently strong to prevent damage by a force or torque 100 times greater than the resistance to movement within the range of adjustment.

5.9.3.5 Critical controls. Critical and sensitive adjustment controls shall incorporate features to prevent inadvertent or accidental actuation.

5.9.3.5.1 Locking device. Operating any locking device used to prevent inadvertent actuation shall not change the adjustment setting.

5.9.3.5.2 Hand or arm support. Where the operator or maintainer is subjected to disturbing vibrations or acceleration during the adjustment operation, suitable hand or arm support shall be provided near the control to facilitate making the adjustment.

5.9.3.6 Hazardous locations. Adjustment controls shall not be located within 305 millimeters (12 inches) to unprotected dangerous voltages, moving machinery, or any other hazards. If such hazardous locations cannot be avoided, the adjustment controls shall be shielded and labeled to protect the maintainer.

5.9.4 Access and accessibility.

5.9.4.1 Structural members. Structural members or permanently installed equipment shall not visually or physically obstruct adjustment, servicing, removal of replaceable equipment, or other required maintenance tasks.

5.9.4.1.1 Panels, cases, and covers. Panels, cases, and covers which have to be removed in order to access equipment shall have the same access requirements as the equipment to be maintained.

5.9.4.1.2 Mounting provisions. Mounting provisions shall be directly visible and physically accessible to the maintainers.

5.9.4.2 Large items. Large items which are difficult to remove shall be mounted so that they will not prevent convenient access to other items.

5.9.4.3 Use of tools and test equipment. Check points, adjustment points, test points, cables, connectors, and labels shall be accessible and visible during maintenance. Sufficient space shall be provided for the use of test equipment and other required tools without difficulty or hazard.

5.9.4.4 Rear access. Sliding, rotating, or hinged equipment to which rear access is required shall be free to open or rotate their full distance and remain in the open position without being supported by hand. Rear access shall be provided to plug connectors for test points, soldering, and pin removal where connectors require such operations.

5.9.4.5 Relative accessibility. Mission critical items that require rapid maintenance shall be most accessible. When relative criticality is not a factor, items that require the most frequent access shall be most accessible.

Downloaded from http://www.everyspec.com

5.9.4.6 High-failure-rate items. High-failure-rate items shall be accessible for replacement without moving non-failed items.

5.9.4.7 Skills. Access to items maintained by one technical specialty shall not require removal of items maintained by another technical specialty.

5.9.4.8 Workspace.

5.9.4.8.1 Workspace features. The workspace shall allow personnel to change their body positions if the task requires kneeling, crawling, or crouching for a prolonged period of time.

a. Protection against potential hazards. Protection shall be provided against any potential hazards which might exist while personnel are performing their tasks.

b. Features to assist personnel. Auxiliary hooks, holders, lights, outlets, nonskid treads, expanded metal flooring, or abrasive coating on surfaces used for walking, climbing, or footholds shall be provided at the workstation to assist personnel in performing their jobs, as appropriate.

c. Nonskid surfaces. Top surfaces of equipment shall be reinforced and provided with nonskid surfaces whenever they are used as work platforms.

5.9.4.8.2 Visual inspection. Items requiring visual inspection (hydraulic reservoirs, gauges) shall be located so personnel can see them without removing panels or other components.

5.9.4.9 Access.

5.9.4.9.1 Access to items and components. Access shall be provided to all points, items, units, and components which require testing, servicing, adjusting, removing, replacing, and repairing.

5.9.4.9.2 Access openings. Access openings shall be provided to all equipment or components that require testing, calibrating, adjusting, removing, replacing, or repairing. Access openings shall be large enough to accommodate hands, arms, tools, and provide full visual access to the task area. The type, size, shape, and location of accesses (see figure 58) shall be based on a thorough understanding of the considerations listed below.

a. Operational location, setting, and environment of the unit.

b. Frequency of use.

c. Maintenance tasks performed through the access and the intricacy of the tasks.

d. Time required to perform maintenance functions.

e. Types of tools and accessories required.

f. Workspace required.

g. Type of clothing likely to be worn by personnel.

h. Necessary access reach.

i. Visual requirements and the intricacy of the tasks.

j. Packaging of items and elements behind the access.

k. Mounting of items, units, and elements behind the access.

l. Hazards in using the access.

m. Size, shape, weight, and clearance requirements for logical combinations of human appendages, tools, and units that will enter the access.

Downloaded from http://www.everyspec.com

OPENING DIMENSIONS	DIMENSIONS (IN MM) A	B	TASK
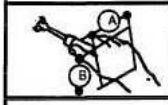	110	120	USING COMMON SCREWDRIVER, WITH FREEDOM TO TURN HAND THROUGH 180°.
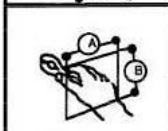	130	115	USING PLIERS AND SIMILAR TOOLS.
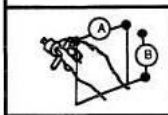	135	155	USING "T" HANDLE WRENCH, WITH FREEDOM TO TURN HAND THROUGH 180°
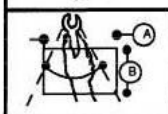	270	200	USING OPEN-END WRENCH, WITH FREEDOM TO TURN WRENCH THROUGH 60°.
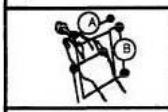	120	155	USING ALLEN-TYPE WRENCH WITH FREEDOM TO TURN WRENCH THROUGH 60°.
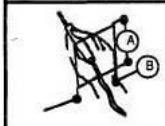	90	90	USING TEST PROBE.

OPENING DIMENSIONS	DIMENSIONS (IN MM) A	B	TASK
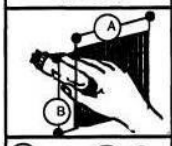	110	120	GRASPING SMALL OBJECTS (UP TO 50mm WIDE) WITH ONE HAND.
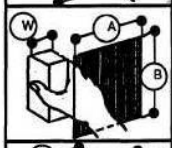	W+45	125°	GRASPING LARGE OBJECTS (50mm OR MORE WIDE) WITH ONE HAND.
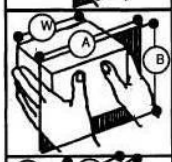	W+75	125°	GRASPING LARGE OBJECTS WITH TWO HANDS, WITH HANDS EXTENDED THROUGH OPENINGS UP TO FINGERS.
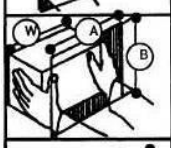	W+150	125°	GRASPING LARGE OBJECTS WITH TWO HANDS, WITH ARMS EXTENDED THROUGH OPENINGS UP TO WRISTS.
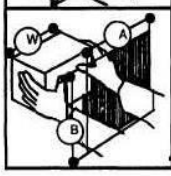	W+150	125°	GRASPING LARGE OBJECTS WITH TWO HANDS, WITH ARMS EXTENDED THROUGH OPENINGS UP TO ELBOWS.

FIGURE 58. Access opening dimensions.

5.9.4.9.3 Physical access. Physical access designs shall meet the following:

a. General.

(1) Physical space. Physical space shall be designed into and within the equipment and systems so that sufficient accessibility for all maintenance activities required is provided for 90 percent central accommodation of the maintainer population.

(2) Body postures. Where maintenance tasks require the assumption of various body postures, the access opening and the physical space requirements for these body postures shall be provided in accordance with 5.10.

(3) Maintenance from above and outside. Whenever possible, equipment design shall permit maintenance from above and outside rather than from underneath or inside components.

(4) Adequate space. Adequate space of 0.4 meters squared (4.0 feet squared) per person minimum shall be provided for personnel, their clothing, including required personal protective equipment, tools, and equipment; as well as free space for the movements and activities required to perform maintenance tasks.

(5) Working space. When maintenance requires the removal of large internal parts, the working space provided shall accommodate the person(s) performing the task, the physical size of the removed component, and any laydown area needed for the component, tools, or equipment.

b. Arm and hand access. Arm and hand access designs shall meet the following:

(1) Location and size. Openings provided for access shall be located and sized to permit the required adjustment or handling.

(2) Viewing. Openings shall provide an adequate view of the item being manipulated.

(3) Reach access dimensions and shape. The dimensions of access openings shall be not less than those shown on figure 59.

(4) Clearance for hand. Allowance shall be made for the clearance of the maintainer's hand, applicable handwear, and clothing.

Downloaded from http://www.everyspec.com

(5) Access shape. Access shape shall provide clearance for the equipment (including its protuberances, attachments, and handles), appropriate body parts, and tools.

(6) Tool access dimensions. Access openings shall be large enough to operate tools required for maintenance of the equipment reached through the access.

(7) Type of opening. Where arm and hand access is required, the following practices shall be followed in order of preference:

(a) An opening with no cover unless this is likely to degrade system performance, safety, or CBRNE contamination survivability.

(b) A hand-operated (latched, sliding, or hinged) cap or door where dirt, moisture, or other foreign materials might otherwise create a problem.

(c) A quick-opening cover plate using ¼-turn captive fasteners if a cap will not meet stress requirements or space prevents a hinged cover.

(d) A screw-down cover, when captive fasteners cannot be used because of stress, structure or pressurization constraints.

c. Whole-body access. Where whole-body access is required, the opening shall accommodate 95 percent of projected maintenance personnel. Where rescue of personnel may be required because of environmental hazards (e.g., toxic fumes inside fuel tanks), access openings for two-person ingress and egress shall be provided.

Downloaded from http://www.everyspec.com

Minimal two-hand access opening without visual access			
Reaching with both hands to depth of 150 to 490 mm (6.0 to 20 in)			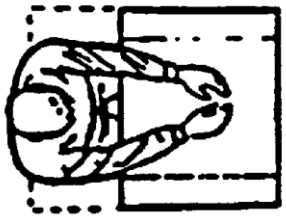
Light clothing:	Width:	200 mm (8.0 in) or the depth of reach [1/]	
	Height:	125 mm (5.0 in)	
Arctic clothing:	Width:	150 mm (6.0) plus ¾ the depth of reach	
	Height:	180 mm (7.0 in)	
Reaching full arm's lengh (to shoulders) with both arms:			
	Width:	500 mm (20 in)	
	Height:	125 mm (5.0 in)	
Inserting box grasped by handles on the front:			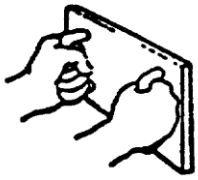
13 mm (0.5 in) clearance around box, assuming adequate clearance around handles			
Inserting box with hands on the sides:			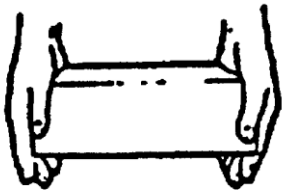
Light clothing:	Width:	Box plus 115 mm (4.5 in)	
	Height:	125 (5.0 in) mm or 13 mm (0.5 in) around box [1/ 2/]	
Arctic clothing:	Width:	Box plus 180 mm (7.0 in)	
	Height:	215 mm (8.5 in) or 15 mm (0.6 in) around box [1/ 2/]	

Minimal one-hand access opening without visual access			
	Height	Width	
Empth hand, to wrist:			
Bare hand, rolled	95 mm (3.75 in) sq or dia		
Bare hand, flat	55 mm (2.0 in)	100 mm (4.0 in) or 100 mm (4.0 in) dia	
Glove or mitten	100 mm (4.0 in)	150 mm (6.0 in) or 150 mm (6.0 in) dia	
Artcic mitten	125 mm (5.0 in)	165 mm (6.5 in) or 165 mm (6.5 in) dia	
Clenched hand, to wrist:			
Bare hand	95 mm (3.75 in)	125 mm (5.0 in) or 125 mm (5.0 in) dia	
Glove or mitten	115 mm (4.5 in)	150 mm (6.0 in) or 150 mm (6.0 in) dia	
Arctic mitten	180 mm (5.0 in)	215 (8.5 in) mm or 215 mm (8.5 in) dia	
Hand plus 1 in (25 mm) dia object, to wrist:			
Bare hand	95 mm (3.75 in) sq or dia		
Gloved hand	150 mm (6.0 in) sq or dia		
Arctic hand	180 mm (7.0 in) sq or dia		
Hand plus object over 1 in (25 mm) in dia, to wrist:			
Bare hand	45 mm (1.75 in) clearance around object		
Glove or mitten	64 mm (2.5 in) clearance around object		
Arctic mitten	90 mm (3.5 in) clearance around object		
Arm to elbow:			
Light clothing	100 mm (4.0 in)	115 mm (4.5 in)	
Arctic clothing	180 mm (7.0 in) sq or dia		
With object	Clearances as above		

FIGURE 59. Arm and hand access dimensions.

Downloaded from http://www.everyspec.com

Downloaded from http://www.everyspec.com

Minimal one-hand access opening without visual access (cont.)			
	Height	Width	
Arm to shoulder:			
Light clothing	125mm (5.0 in) sq or dia		
Arctic clothing	215 mm (8.5 in) sq or dia		
With object	Clearances as above		
Minimal finger access to first joint			
Push button access:			
Bare hand	32 mm (1.25 in) dia		
Gloved hand	38 mm (1.5 in) dia		
			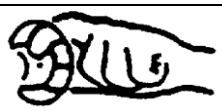
Bare hand	object plus 50 mm (2.0 in)		
Gloved hand	object plus 65 mm (2.5 in)		

NOTES:

1/ Whichever is larger.

2/ If hands curl around bottom, allow an extra 38 mm (1.5 in) for light clothing and 75 mm (3.0) for arctic clothing.

FIGURE 59. Arm and hand access dimensions – Continued.

5.9.4.9.4 Guarding hazardous conditions. If a hazardous condition (such as exposed, high voltage conductors) exists behind the access, the physical barrier over the access shall be equipped with an interlock that will de-energize the hazardous equipment when the barrier is open or removed. Both the presence of the hazard and the fact that an interlock exists shall be noted on the equipment case or cover such that it remains visible when the access is open (see 5.9.9.3).

5.9.5 Lubrication.

5.9.5.1 General. Where feasible, self-lubricating components shall be used.

5.9.5.1.1 Equipment configuration. Configuration of equipment requiring lubrication shall permit lubrication and, as applicable, checking of lubricant reservoir levels without disassembly.

5.9.5.1.2 Types of lubricants. The number of types of required lubricants shall be minimized.

5.9.5.1.3 Lubrication points. Lubrication points shall be accessible, clearly labeled, and, where applicable, provided with captive caps or covers.

5.9.5.1.4 Extended fittings. Extended fittings shall be provided to lubricant ports that would not otherwise be readily accessible or visible.

5.9.5.1.5 Number of service points. The number of service ports shall be minimized by routing service lines to a centralized servicing location(s).

5.9.5.1.6 Lubrication indication. A clear indication that lubrication is completed shall be provided to ensure proper servicing level.

5.9.5.1.7 Improper coupling. Fittings shall be sized to prevent coupling with improper servicing devices.

5.9.5.1.8 Warning message. Where lubrication is system or mission critical, a “low lubrication level” warning message or indicator shall be provided.

Downloaded from http://www.everyspec.com

5.9.5.2 Labeling.

5.9.5.2.1 Type of lubricant. Where lubrication is required, the type of lubricant to be used and the frequency of lubrication shall be specified by a label mounted at or near the lube port or grease fitting.

5.9.5.2.2 Labels. All lubrication storage or service tanks shall be labeled per the requirements of 5.4.

5.9.5.2.3 Non-airborne equipment. For non-airborne equipment, a lubrication chart of permanent construction shall be mounted at the equipment work station.

5.9.5.2.4 Lubrication chart. If a lubrication chart is prepared, each fitting shall be labeled to match the chart identification name or number and the label placed immediately adjacent to the fitting.

5.9.5.2.5 Prevention of incorrectly filling tank. Where incorrect filling of a lubrication tank is possible, the tanks shall be designed in such a manner as to make it physically impossible for a person to put the wrong material in the wrong tank.

5.9.5.2.6 Oil drains. Oil drains, when not permanently piped, shall be provided with a temporary hose attachment for gravity draining into small containers.

5.9.6 Case and cover mounting. Cover or shield holes shall be large enough for mounting screw clearance without perfect case alignment.

5.9.6.1 Location and mounts. Covers, cases, and shields shall be designed, located, and mounted so that they can be removed and replaced if damaged.

5.9.6.2 Opening or removal. Covers, cases, and shields shall be capable of being opened or removed as necessary without taking the equipment apart or removing auxiliary equipment.

5.9.6.3 Interference with controls. When open, covers, cases, or shields shall not obscure or interfere with controls, displays, test points, or connections used in working inside the access or enclosure.

5.9.6.4 Stops and retainers. Covers, cases, and shields shall have adequate stops and retainers to keep them from swinging against, or being dropped on, fragile equipment or personnel, and have locking devices or retaining bars to hold them open if they might otherwise fall shut and cause damage, injury, or inconvenience.

5.9.6.5 Fasteners. Fasteners for covers, cases, and shields shall be selected, applied, and mounted so that they satisfy the preferences, criteria, and standardization aspects specified herein.

5.9.6.5.1 Hinges, latches, and catches. Hinges, latches, and catches shall be used wherever possible to reduce handling and stowing of covers and cases.

5.9.6.5.2 Cover not in place. It shall be obvious when a cover is not in place or is not securely fastened.

5.9.6.5.3 Spring-loaded fasteners. Where possible, spring-loaded fasteners shall be used so they can stand out or the cover itself stays ajar when it is not secure.

5.9.6.6 Labels and markings. Labels and markings on covers and cases shall do five things:

a. Present instructions on how to open, remove, and position them, unless the design itself makes operation obvious.

b. Clearly indicate the functions of units behind the enclosure or the functions which are performed through the access (e.g., “Battery,” “Fuel Pump,” or “Oil Here”).

c. Warn about any dangers or hazards involved in removing the cover or case, or working within the enclosure.

d. Indicate how units or service equipment should be oriented or connected to go through the opening (unless this is already obvious).

e. Present instructions so they will be visible and properly oriented to a maintenance technician when the cover, door, or case is open.

Downloaded from http://www.everyspec.com

5.9.7 Cases.

5.9.7.1 Orientation. The proper orientation of an item within its case shall be made obvious by design of the case or use of appropriate labels.

5.9.7.2 Removal. Cases shall lift from items rather than the converse. Equipment shall be protected from damage when cases are removed or replaced. Cases shall not require manual support to remain in the open position during maintenance.

5.9.7.3 Size. Cases shall be sufficiently larger than the items they cover to facilitate installation and removal with little or no case manipulation.

5.9.7.4 Guides. Guides, tracks, and stops shall be provided as necessary to facilitate handling and to prevent damage to equipment or injury to personnel.

5.9.8 Covers. Additional guidance on covers can be found in A.8.

5.9.8.1 Securing of covers. It shall be made obvious when a cover is not secured, even though it may be in place.

5.9.8.2 Instructions. If the method of opening a cover is not obvious from the construction of the cover itself, instructions shall be permanently displayed on the outside of the cover. Instructions shall consist of simple symbols such as arrows or simple words such as “push” or “push and turn.”

5.9.8.3 Ventilation holes. If a cover or shield requires ventilation holes, the holes shall be no larger than 13 millimeters (0.5 inch) in diameter. Any component which rotates, oscillates, or carries high voltage shall be spaced back from the ventilation holes so personnel cannot accidently contact the hazard.

5.9.8.4 Orientation. A removable access cover that requires a particular orientation shall be designed to prevent attachment in any other orientation.

5.9.8.5 Fasteners for covers. Fasteners shall give an indication that they are fastened.

5.9.8.6 Opening covers. Access covers shall be equipped with grasp areas or other means for opening them. Covers shall accommodate handwear or special clothing that may be worn by the maintainer. When hinged doors are adjacent, they shall open in the opposite directions to maximize accessibility. Hinged caps shall be used over test or service points so they will not interfere with inserting or attaching test or service equipment. Stops or retainers shall be used as necessary to keep doors from swinging into adjacent controls or fragile components, and so they will not spring their hinges.

5.9.9 Access openings and covers.

5.9.9.1 Application. An access shall be provided if frequent maintenance would otherwise require removing a case or covering, opening a fitting, or dismantling an item of equipment.

5.9.9.2 Self-supporting covers. Hinged access covers that are not completely removable shall be self-supporting in the open position.

5.9.9.2.1 Visual or physical access. The cover in the open position shall not obstruct required visual or physical access to the equipment being maintained or to related equipment during maintenance.

5.9.9.2.2 One-hand opening. Self-supporting covers shall be capable of being opened and closed with one hand.

5.9.9.3 Labeling. Each access shall be labeled with nomenclature for items visible or accessible through it, nomenclature for auxiliary equipment to be used with it, and recommended procedures.

5.9.9.3.1 Warning signs. Accesses shall be labeled with warning signs, disclosing any hazards existing beyond the access and prescribing precautions.

Downloaded from http://www.everyspec.com

5.9.9.3.2 Access cover. Opening or removing an access cover shall not remove or visually obstruct any hazard warning.

5.9.9.3.3 Instructions on hinged door. If instructions applying to a covered item appear on a hinged door, the lettering shall be oriented to be read when the door is open.

5.9.9.3.4 Clear and direct. Warning notices shall be clear, direct, and attention-getting and have a 25 percent larger letter height than any detailed instructions that follow.

5.9.9.4 Visual access. Where visual access is required, the opening shall provide a visual angle sufficient to view all required information at the normal operating or maintenance position.

5.9.9.4.1 Unrestricted visual access. The maintainer shall be provided unrestricted visual access from the work station without bending.

5.9.9.4.2 Bending. Where bending is required, frequency and time in the bent position shall not cause fatigue.

5.9.9.4.3 Visual access only. Where visual access only is required, the following practices shall be followed in order of precedence:

a. Opening with no cover except where this might degrade system performance or CBRNE survivability.

b. Transparent window if dirt, moisture, or other foreign materials might otherwise create a problem.

c. Break-resistant glass window if physical wear, heat, or contact with solvents would otherwise cause optical deterioration.

d. Quick-opening opaque cover if glass will not meet stress or other requirements.

5.9.9.5 Access cover attachment. Hinged or removable covers shall be fastened with the fewest practical number of simple-to-use fasteners.

5.9.10 Fasteners. Additional guidance on fasteners can be found in A.9.

5.9.10.1 General. The number and diversity of fasteners used shall be minimized commensurate with stress, bonding, pressurization, shielding, thermal, and safety requirements.

5.9.10.1.1 Distinguish location of fastener. When more than one size or type fastener is used on the same equipment or cover, the fasteners-equipment-cover interface shall permit the maintainer to readily distinguish the intended location of each fastener.

5.9.10.1.2 Finger- or hand-operated fasteners. Finger- or hand-operated fasteners shall be used when consistent with the requirements specified herein, except where screws with heads flush with the case or fastening surface are required for CBRNE survivability.

5.9.10.1.3 Nonstandard tools. Fasteners requiring nonstandard tools shall not be used.

5.9.10.2 Hinges and tongue-and-slot catches. Hinges, tongue-and-slot catches, and mounting pins shall be used to minimize the number of fasteners required; however, where covers are subject to CBRNE survivability requirements, pin and hook arrangements, rather than hinges, shall be used.

5.9.10.3 Captive fasteners. Captive fasteners shall be used where dropping or losing such items could cause damage to equipment or create a difficult or hazardous removal problem. Captive fasteners shall be provided for access covers requiring frequent removal.

5.9.10.4 Quantity. If a hinged access panel or quick-opening fasteners will not meet stress, pressurization, shielding, or safety requirements, the minimum number of fasteners consistent with these requirements shall be used.

5.9.10.5 Latches and catches. Latches and catches shall give a clear visual indication that they are engaged. The spring action or snap-down force shall not be so strong that it could injure the maintainer. Latches and catches shall be located and positioned to avoid inadvertent operation.

Downloaded from http://www.everyspec.com

5.9.10.6 Threaded fasteners.

5.9.10.6.1 Head type. Head type shall meet the following:

a. High-torque. External hex or external double-hex wrenching elements shall be provided on all machine screws, bolts, or other fasteners requiring more than 14 Newton meters (10 foot pounds) of torque.

(1) Internal wrenching fasteners. When external wrenching fasteners cannot meet the mechanical function or personnel safety requirements, or in limited access situations, and where use is protected from accumulation of foreign material, internal wrenching fasteners may be used.

(2) Direct tool access. Direct tool access shall be provided to allow for torquing without the use of irregular extensions.

b. Low-torque. External hex wrenching head, internal hex wrenching head, combination head (internal hex or straight recess and external hex wrenching head), or torque-set fasteners shall be provided where less than 14 Newton meters (10 foot pounds) torque is required.

(1) Internal wrenching fasteners. Internal-wrenching fasteners shall be provided only where a straight, or convex, smooth surface is required for mechanical function or personnel safety, and where use is protected from accumulation of foreign material (e.g., ice, snow).

(2) Internal grip fasteners. Straight-slot or cross-recess type internal grip fasteners shall not be provided, except as wood fasteners or where these types of fasteners are provided on standard commercial items.

5.9.10.6.2 Common fasteners. Whenever possible, identical screw and bolt heads shall be provided to allow panels and components to be removed with one tool.

a. Combination bolt heads. Combination bolt heads such as slotted hex head shall be selected whenever feasible.

b. Identical fasteners. Identical fasteners shall not be used where removal of wrong fastener can result in equipment damage or change to calibration settings.

5.9.10.6.3 Number of turns. Fasteners for mounting assemblies and subassemblies shall require a minimum number of turns, compatible with stress, alignment, positioning, and load considerations.

a. Amount of torque. When machine screws or bolts are required, the number of turns and the amount of torque shall be no more than necessary to provide the required strength except when a common fastener is utilized.

b. Quick release fasteners. All items requiring removal for daily or more frequently scheduled inspections and servicing shall use quick release fasteners.

5.9.10.6.4 Torque labeling. When fastener torquing to meet electromagnetic interference/radio frequency interference (EMI/RFI) shielding, thermal conductance, or other constraints is required for organizational or intermediate level maintenance actions, an instructional label or placard shall be provided near the fasteners. Such labels shall comply with requirements of 5.4 and specify the required torque value and torquing sequence.

5.9.10.6.5 Left-hand threads. Fasteners with left-hand threads, where required, shall be identified so they are distinguishable from right-hand threaded fasteners.

5.9.10.6.6 Lock washers. Captive washers and lock washers shall be used when loss would otherwise present a hazard to equipment or personnel.

5.9.10.6.7 Removal and replacement with one hand or tool. Nuts and bolts that are removed and replaced frequently and that are relatively inaccessible shall be mounted so that they can be removed and replaced with one hand or one tool.

a. Attachment. Either the nut or the bolt shall be attached semi-permanently, and they shall not interfere with each other or with other components during release.

b. Adequate clearance. Nuts and bolts shall have adequate hand or tool clearance for easy operation.

c. Durability. Fasteners that are normally operated by hand shall be durable enough that they can be turned with a wrench.

Downloaded from http://www.everyspec.com

5.9.11 Unit design for efficient handling.

5.9.11.1 Rests and stands.

5.9.11.1.1 Provide rests or stands. When required for maintenance tasks, rests or stands shall be provided for placing units, test equipment, tools, technical orders, and manuals.

5.9.11.1.2 Part of basic unit. When permitted by design requirements, such rests or stands shall be part of the basic unit, rack, or console chassis.

5.9.11.2 Extensions. Extensions and connected appurtenances, accessories, utilities, cables, wave guides, hoses, and similar items shall not interfere with removing, replacing, or carrying an item.

5.9.11.2.1 Interference. If such extensions and connected appurtenances interfere with these tasks, they shall be easily removed or disconnected from the equipment before handling.

5.9.11.2.2 Disconnects. Easy disconnects shall consist of hand-operable quick disconnect or standard hand tool operable disconnects in that order of preference.

5.9.12 Mounting. Additional guidance on mounting and packaging can be found in A.5.

5.9.12.1 General. Equipment configuration shall preclude improper mounting.

5.9.12.2 Tools. Items maintained at the organizational level shall be replaceable using only common hand tools.

5.9.12.3 Removal. Replaceable items shall be removable along a straight or slightly curved line, rather than through an angle.

5.9.12.4 Alignment. Items which must be precisely located or which incorporate rack and panel connectors shall use guide pins, or their equivalent, to assist in alignment during mounting.

5.9.12.4.1 Bottom-mounted aligning pins. Bottom-mounted aligning pins shall be used for components which are light enough to be lifted and positioned easily such as those weighing less than 9 kilograms (20 pounds).

5.9.12.4.2 Side-aligning devices. Side-aligning devices or brackets shall be used for heavy components so the components can be slid rather than lifted into and out of place.

5.9.12.4.3 Shock mounts. Shock mounts shall be used, as necessary, to eliminate vibrational fluctuations in displays and markings as well as to protect fragile or vibration-sensitive components and instruments.

5.9.12.5 Labeling and coding. Where an item can be mounted and oriented any way other than intended, proper mounting and orientation shall be indicated by labels or coding (e.g., color). Where required to expedite field repair, wire bundles of more than five wires shall be labeled and color coded.

5.9.12.6 Rollout racks, slides, or hinges. Items which must be pulled out of their installed positions shall be mounted on rollout racks, slides, or hinges.

5.9.12.6.1 Center of gravity. Rollout racks pulled to the fully extended position shall not shift the center of gravity to the point where the rack or console becomes unstable.

5.9.12.6.2 Secure safely. The console or rack shall be safely secured.

5.9.12.6.3 Pull-out or slide-out racks. Pull-out or slide-out racks and drawers shall be designed in the manner listed below:

a. They operate with a force less than 17.8 Newtons (4.0 pounds of force).

b. They lock automatically in both servicing and operating positions.

c. Handles are provided, as necessary, to facilitate operation and handling.

d. Assemblies may be opened without breaking internal connections necessary for required maintenance.

Downloaded from http://www.everyspec.com

e. Guards and shields are provided, as necessary, to prevent damage to fragile or sensitive parts when the assembly is moved.

5.9.12.7 Limit stops. Limit stops shall be provided on racks and drawers that are required to be pulled out of their installed positions. Rollout racks and drawers shall be self-locking in the retracted and extended positions. The limit stop design shall permit convenient overriding of stops for rack or drawer removal.

5.9.12.8 Interlocks. Interlocks shall be provided to ensure disconnection of equipment that would otherwise be damaged by withdrawal of racks or drawers.

5.9.12.9 Hinged mounting. Hinged items shall be provided with a brace or other means of support to hold equipment in the "out" position for maintenance if it is not free to rotate and remain in the "out" position without support.

5.9.12.10 Layout. Units shall be laid out so that a minimum of place-to-place movements will be required during checkout.

5.9.12.10.1 Removable components. Removable components should weigh less than 13.6 kilograms (30 pounds) preferred, and shall weigh less than 20.5 kilograms (45 pounds) maximum.

5.9.12.10.2 Heavy components. Whenever possible, heavier components shall be placed so they are the easiest to reach and can be slid out rather than lifted out.

5.9.12.10.3 Difficult to reach items. Difficult to reach items shall weigh less than 11.3 kilograms (25 pounds).

5.9.12.10.4 Two-person lift. Items weighing over 20.5 kilograms (45 pounds) shall be placed for two-person handling.

5.9.12.11 Covers or panels. The number of covers and panels that must be opened or removed to access a replaceable item shall be minimized.

5.9.13 Lifting. See 5.8.6.3.

5.9.14 Conductors. Additional guidance on conductors can be found in A.10.

5.9.14.1 Coding. Cables containing individually insulated conductors with a common sheath shall be coded every 300 millimeters (12 inches).

5.9.14.1.1 Wires. Wires shall be color coded by (in order of preference) solid-color insulation, solid-color insulation with colored-stripe tracer, or colored braid insulation with woven tracer. Every wire in a cable shall be color coded over its entire length. Wires shall be coded using discriminably different patterns of solid colors and solids with striped tracers (see table XLII). For more than 21 wires, see MIL-STD-686. If a wire's color may become obscured, wires may be coded with numbered metal tags. The length of wires shall be long enough to allow for at least two repairs.

Downloaded from http://www.everyspec.com

TABLE XLII. Electrical cable coding.

Instructions	Number of conductors	Basic color	Tracer
1. Find the number of the conductor to be color coded. 2. The colors at the right of the number are the appropriate combination for that conductor. For example, if a cable consists of 12 conductors, the twelfth color combination would be black with white tracer. The eighth color combination would be red with black tracer. The fifth color combination would be orange without tracer, and so on.	1	Black	None
	2	White	None
	3	Red	None
	4	Green	None
	5	Orange	None
	6	Blue	None
	7	White	Black
	8	Red	Black
	9	Green	Black
	10	Orange	Black
	11	Blue	Black
	12	Black	White
	13	Red	White
	14	Green	White
	15	Blue	White
	16	Black	Red
	17	White	Red
	18	Orange	Red
	19	Blue	Red
	20	Red	Green
	21	Orange	Green

NOTE:
1. If a cable has concentrically laid conductors, the first combination or color applies to the center conductor. If a cable contains various sizes of conductors, the first color applies to the largest, continuing in order of conductor size.

5.9.14.1.2 Hydraulic and pneumatic conductors. Hydraulic and pneumatic conductors shall either be color coded (see table XLIII) or coded by metal tags. Metal tags shall be used where adverse conditions (such as grease or mud) could obscure colors; otherwise, color-coding shall be used.

Downloaded from http://www.everyspec.com

TABLE XLIII. Hydraulic and pneumatic coding.

Function	Color	Definition of function
Intensified pressure	Black	Pressure in excess of supply pressure induced by a booster or intensifier.
Supply pressure	Red	Pressure of the power-actuating fluid.
Charging pressure	Intermittent red	Pump-inlet pressure, higher than atmospheric pressure.
Reduced pressure	Intermittent red	Auxiliary pressure lower than supply pressure.
Metered flow	Yellow	Fluid at a controlled flow rate (other than pump delivery).
Exhaust	Blue	Return of the power-actuating fluid to reservoir.
Intake	Green	Subatmospheric pressure, usually on the intake side of the pump.
Drain	Green	Return of leakage of control-actuating fluid to reservoir.
Inactive	Blank	Fluid within the circuit but not serving a functional purpose during the phase being represented.

5.9.14.2 Cable clamps. Unless wiring ducts or conduits are used, mechanically (not adhesively) mounted cable clamps shall be provided to ensure correct routing of electrical cables within and between equipment items to ensure that cables do not hinder or obstruct equipment maintenance and to facilitate the mating of cables with their associated equipment items, and to prevent chafing due to contact with adjacent structure.

5.9.14.2.1 Visibility of clamps. All clamps shall be visible when equipment is installed.

5.9.14.2.2 Spacing. Clamps or plates that mount lines and cables shall be spaced not more than 610 millimeters (24 inches) apart, and have heat-insulating liners.

5.9.14.2.3 Quick-release. Clamps or plates shall be the quick-release hinged or spring type if cables are removed frequently; hinged clamps are preferable.

5.9.14.2.4 Overhead mounting. For overhead mounting, a spring clamp shall be used with a hinged-locking latch over the clamp's open side.

5.9.14.3 Length. Cables shall be long enough so that required checking of any functioning item can be accomplished in a convenient place.

5.9.14.3.1 Extension cables. Extension cables shall be provided where cable length is not adequate.

5.9.14.3.2 Check of items. Cables shall permit checkout of each functioning item located in drawers or pullout racks without having to remove the item from its installed location.

5.9.14.4 Cable routing. Cable routing shall not obstruct visual or physical access to equipment for operation or maintenance.

5.9.14.4.1 Avoid misuse. Interconnecting cables shall be routed to minimize the possibility of their use as handholds or steps. A protective guard shall be placed over the cables where the possibility of such misuse exists.

5.9.14.4.2 Mounting. Lines and cables shall be routed and mounted so that they fulfill the principles listed below.

a. They shall be accessible without disassembling or removing other equipment.
b. Points of connection, mounting, splicing, or testing shall be especially accessible.
c. They shall be removable and completely replaceable if they are damaged.
d. There are accesses and clearances for removing and replacing them.
e. Moving and rotating parts will not snag them, and so they do not interfere with normal operations.
f. Cables routed through metal partitions shall be protected by use of insulating grommets.

Downloaded from http://www.everyspec.com

g. Foreign objects, such as flying stones, shall not damage them.

h. Cables routed in areas where potential risks for degradation are high (passageways, across walkways, or exposure to adverse conditions such as oil, blasts, and heat) shall be protected by conduit.

5.9.14.5 Access. Cables shall be routed so as to be accessible for inspection and maintenance.

5.9.14.6 Susceptibility to abuse. Cables shall be routed or protected to preclude mechanical damage and abuse, including damage by doors, lids, use as steps or hand holds, or being bent or twisted sharply or repeatedly.

5.9.14.6.1 Protection from mechanical damage. If it is necessary to route cables and wires through holes in metal partitions, the conductors shall be protected from mechanical damage or wear by grommets or equivalent means.

5.9.14.6.2 CBRNE survivability. Where required for CBRNE survivability, cables shall be wrapped and sealed.

5.9.14.7 Identification. Cables shall be labeled to indicate the equipment to which they belong and the connectors with which they mate. All receptacle wires and cables shall be uniquely identified with distinct color or number codes. Color-coded wires shall be color coded over the entire length of the wire. Number codes shall be repeated every 508 millimeters (20 inches) over the entire length of the wire.

5.9.14.8 Fluid and gas lines.

5.9.14.8.1 Personnel and equipment protection. Lines shall be kept from spraying or draining fluid on personnel or equipment. Cutoff valves shall be provided at appropriate locations in the system to permit isolation or drainage of the system for maintenance or emergency purposes.

5.9.14.8.2 Mounting and installation. Lines shall be mounted and installed so that rigid lines with fittings do not have to be backed off before they can be disconnected. Flexible tubing, rather than rigid lines, shall be used where feasible.

5.9.14.8.3 Prevention of mismating. To avoid the possibility of mismating connectors during service or maintenance, lines shall be coded by arrangement, size, shape, or color, and colored bands shall be used to identify all lines that carry fluids.

5.9.14.8.4 Fluid and gas connectors. Connectors for pipes, tubing, hoses, and similar connectors shall be located and installed so that it is unnecessary to jack the equipment up to drain it, fill it, or perform other maintenance.

5.9.14.8.5 Gaskets and seals. Gaskets and seals shall be selected and installed so that they can be replaced easily without removing other connector parts or disassembling other equipment. Part of a gasket or seal shall be visible after it is installed as a check on failure to replace seals after disassembly.

5.9.14.9 Aligning pins. Aligning pins shall extend beyond the plug's electrical pins to ensure that alignment is obtained before the electrical pins engage. All aligning pins for a given plug or series of plugs shall be oriented in the same direction, unless this conflicts with precautions against mismatching.

5.9.15 Connectors.

5.9.15.1 Use of quick-disconnect plugs. Plugs requiring no more than one turn, or other quick-disconnect plugs, shall be provided whenever feasible.

5.9.15.2 Keying. Connector design shall be such that it will be impossible to insert a wrong plug into a receptacle or to insert a plug into the correct receptacle the wrong way.

5.9.15.3 Identification. Electrical plugs and receptacles shall be identified by color, shape, size, or equivalent means to facilitate identification when multiple, similar connectors are used in proximity to each other.

5.9.15.3.1 Labels. Labels or codes on connectors and associated items shall be located so that they are optimally visible during maintenance and are visible whether the connector is connected or disconnected.

Downloaded from http://www.everyspec.com

5.9.15.3.2 Identify connectors. It shall be possible to identify connectors without disconnecting them, and their positions shall be consistent in relation to associated pins, terminals, and receptacles.

5.9.15.4 Alignment. Plugs and receptacles shall be provided with aligning pins, keyways, or equivalent devices to aid in alignment and to preclude inserting in other than the desired position. Aligning devices shall ensure that alignment is obtained before the electrical seals or pins engage.

5.9.15.5 Orientation. Plugs and receptacles shall be arranged so that the aligning devices are oriented in the same relative position.

5.9.15.6 Coding. Coding techniques for plugs and receptacles shall provide for position of aligning pins or equivalent devices for proper insertion.

5.9.15.6.1 Color-coding. All colors used for coding shall be readily discriminable from each other under operational lighting. Colored areas shall be protected, in so far as possible, to keep the color from wearing off, fading, or disappearing. Permanently applied colors shall be used rather than adhesive tapes or bent-on tapes whenever possible. If many connectors must be coded and there are not enough easily discriminable colors, matching patterns of colors or stripes shall be used. Colors used to code connectors shall be consistent and have the same meaning throughout the system.

5.9.15.6.2 Shape coding. Connectors shall be coded by using various shapes of matching plugs and receptacles. Different shapes of alignment pins may be used to differentiate connectors and to prevent mismating.

5.9.15.6.3 Pin configurations. Another coding method that may be used is using connectors with different numbers and configurations of pins or unique key way slots so that it is physically impossible to mismate connectors without breaking them.

a. Selection. To prevent damage from mismating, designers shall select and code connectors so it is obvious which pairs do, or do not, match.

b. Differentiation. When a plug and a receptacle look generally similar but do not mate, additional coding shall be used to differentiate them.

5.9.15.7 Spacing. Connectors shall be spaced far enough apart so that they can be grasped firmly for connecting and disconnecting.

5.9.15.7.1 Space between adjacent connectors. Space between adjacent connectors, or between a connector and any adjacent obstructions, shall be compatible with the size and shape of the plugs, and the type of clothing worn by the maintainer (e.g., cold weather handwear, CBRNE gloves).

5.9.15.7.2 Bare finger operation. For bare finger operation, space between adjacent connectors shall be not less than 25 millimeters (1.0 inch), except where connectors are to be sequentially removed and replaced and 25 millimeters (1.0 inch) clearance is provided in a swept area of not less than 270 degrees around each connector at the start of its removal/replacement sequence.

5.9.15.7.3 Gloved finger operation. Space between adjacent connectors shall be not less than 32 millimeters (1.25 inches) if the connector is to be operated with gloved fingers, 64 millimeters (2.5 inches) if the connector must be gripped firmly, and 75 millimeters (3.0 inches) if the connector is operated with mittened hands.

5.9.15.7.4 Measuring spacing. Spacing shall be measured from the outermost portion of the connector, i.e., from the backshell, strain relief clamp, dust cover, or EMI/RFI shield.

5.9.15.7.5 High torque. Where high torque is required to tighten or loosen the connector, space shall be provided for use of a connector wrench.

5.9.15.8 Testing and servicing. The rear of plug connectors shall be accessible for testing and servicing, except where precluded by potting, sealing, or other requirements.

Downloaded from http://www.everyspec.com

5.9.15.9 Drawer modules. Where feasible, removable drawer modules shall be provided with connectors mounted on the back of the drawer to mate with connectors in the cabinet to accomplish electrical interconnection between the drawer, other equipment in the rack, and external connectors. Guide pins or equivalent devices shall be provided to aid in connector alignment and mating.

5.9.15.10 Electronic modules. Replacement electronic items (e.g., modules and high-failure-rate components) shall be provided with simple plug-in, rack-and-panel type connectors.

5.9.15.11 Disassembly and adapters. Disassembly of connectors to change pin connections shall be performed without special tools. When adapters are required, they shall be capable of being hand-tightened.

5.9.15.12 Protective covers. If protective covers are required, captive types shall be used.

5.9.15.13 Electrical connectors. Electrical plugs shall be designed, installed, and mounted so that it is impossible to insert a plug into the wrong receptacle or into the correct receptacle the wrong way.

5.9.15.13.1 Multiple contacts. Wherever possible, plugs shall have multiple contacts to reduce the number of plugs and, consequently, the number of maintenance operations.

5.9.15.13.2 "Plug-in" connectors. Connectors shall "plug-in" or secure with no more than one complete turn, especially with auxiliary or test equipment.

5.9.15.13.3 Wiring. Wiring shall be routed through the plugs and receptacles so disconnection does not expose "hot" leads.

5.9.15.13.4 Receptacles. Receptacles shall be "hot" and plugs shall be "cold" when disconnected.

5.9.15.13.5 Plugs. Plugs shall be self-locking or use safety catches rather than requiring safety wiring; plugs shall have low insertion forces to minimize the possibility of damaging contact surfaces.

5.9.16 Test points. Additional guidance on test and service points can be found in A.11.

5.9.16.1 Adjustment. Test points used for adjustment shall be located sufficiently close to the controls and displays used in the adjustment so that maintainer place-to-place movement is not required during the adjustment process. Test points for adjustment shall be physically and visually accessible in the installed condition by the maintainer without removing other items.

5.9.16.2 Troubleshooting. Troubleshooting shall not require removal of subassemblies from assemblies.

5.9.16.3 Labeling. Test points shall be permanently labeled with its identification and the within-tolerance range to be measured. Each test point shall be labeled to identify it in the maintenance instructions. If possible, the name of the unit shall be included in the label.

5.9.16.4 Ease of access. Test points shall be located on surfaces or behind accesses which may be easily reached or readily operated when the equipment is fully assembled and installed.

5.9.16.5 Labels facing technician. Test points shall be designed so the test point and its associated labels and controls are facing the technician.

5.9.16.6 Minimum clearance. Test points shall be located so that a minimum clearance of 19 millimeters (0.75 inch) is provided when only finger control is required, and 75 millimeters (3.0 inches) is provided when a gloved hand must be used.

5.9.16.7 Guards and shields. Test points shall be designed with guards and shields to protect personnel and test and service equipment, particularly if the equipment must be serviced while operating.

5.9.16.8 Isolated position. Locating test points in an isolated position shall be avoided as such points are most likely to be overlooked or neglected.

5.9.16.9 Visual inspection. Test points shall be designed with windows to internal items requiring frequent visual inspections.

Downloaded from http://www.everyspec.com

5.9.16.10 Tool guides. Test points shall be designed with tool guides and other design features to facilitate operation of test or service points which require blind operation.

5.9.16.11 Functional reach. Test points shall be located within easy functional reach or seeing distance of related or corresponding controls, displays, fittings, and switches.

5.9.16.12 Hazards. Test points shall be located at least 115 millimeters (4.5 inches) away from dangerous electrical, mechanical, or other hazards.

5.9.17 Test equipment. Additional guidance on test equipment can be found in A.12.

5.9.17.1 Storage. Adequate storage space shall be provided within portable test equipment, its handling case, or lid to contain leads, probes, spares, manuals, and special tools, as required for operation.

5.9.17.2 Instructions. Instructions for operating portable test equipment shall be provided on the face of the test equipment, in a lid, in a special compartment, or on an electronic display interface.

5.9.17.2.1 Readability. Instructions shall be directly readable while test equipment is being operated.

5.9.17.2.2 Print size. Instructions shall be printed large enough to be seen in the lowest light level likely to be encountered while performing the equipment test(s).

5.9.17.2.3 Calibration. Periodic calibration records, including tolerance check values, shall be placarded on the equipment where appropriate. Where applicable, the instructions shall include a reminder to calibrate the equipment and calibration procedures. If the system contains an electronic display(s), calibration procedures and data shall be available for presentation on the display.

5.9.17.3 Portable test equipment.

5.9.17.3.1 Stands or casters. Stands or casters shall be provided for devices weighing more than 13.6 kilograms (30 pounds).

5.9.17.3.2 Wheels or hoist-lifting. Wheels, casters, or hoist-lifting shall be provided for devices weighing more than 40.8 kilograms (90 pounds).

5.9.17.3.3 Rounded corners and edges. Portable test equipment shall have rounded corners and edges.

5.9.17.3.4 Weight and dimensions. The weight and dimensions of portable test equipment shall not exceed those listed in table XLIV.

TABLE XLIV. Weight and dimension limits of portable test equipment.

Dimensions	**Operability**		**Portability**	
	Hand-held		**One person**	**Hand-held**
	Optimum	**Maximum**	**Optimum**	**Maximum**
Weight – kg (lb)	1.4 (3.0)	2.3 (5.0)	11.3 (25)	40.8 (90)
Height – mm (in)	50 (2.0)	100 (4.0)	460 (18)	485 (19)
Length – mm (in)	200 (8.0)	255 (10)	460 (18)	
Width – mm (in)	100 (4.0)	125 (5.0)	255 (10)	

Downloaded from http://www.everyspec.com

5.9.18 Failure indications and fuse requirements.

5.9.18.1 Indication of equipment failure.

5.9.18.1.1 Power failure. An indication shall be provided to reveal when power failure occurs (see 5.2.3.13.7).

5.9.18.1.2 Out-of-tolerance. A display shall be provided to indicate when an equipment item has failed or is not operating within tolerance limits. All mission essential electronic equipment shall incorporate an automatic self-check diagnostic at startup and at the request of the user.

5.9.18.1.3 Critical malfunctions. A visual and auditory alarm shall be provided to indicate a malfunction or condition that could cause personnel injury or equipment damage. If an audio alarm would compromise covert operation of equipment, a visible signal shall be displayed.

5.9.18.2 Fuses and circuit breakers.

5.9.18.2.1 General. A positive indication shall be provided to reveal that a fuse or circuit breaker has opened a circuit.

5.9.18.2.2 Replacement and resetting. Fuses shall be readily accessible for removal and replacement. No other components shall require removal in order to gain access to fuses. No special tools shall be required for fuse replacement unless required by safety considerations. When resetting of circuit breakers is permissible, and is required for system operation during a mission, the breakers shall be located within reach of users in their normal operating posture.

5.9.18.2.3 Markings. Equipment served by the fuse or circuit breaker shall be identified in accordance with 5.4. Labeling of fuses and circuit breakers shall be legible in the anticipated ambient illumination range for the user's location. The current rating of fuses shall be permanently marked adjacent to the fuse holder. SPARE shall be marked adjacent to each spare fuse holder. Fuse ratings shall be indicated either in whole numbers, common fractions (such as ¼), or whole numbers and common fractions (such as 2¼).

5.9.18.2.4 Circuit breaker controls. Toggle bat and legend switch actuated circuit breakers may be used to control electrical power. Push-pull type breakers shall not be used as power switches.

5.9.18.2.5 Circuit breaker dimensions and separations. Dimensions and separation for toggle bat actuated breakers shall be in accordance with figure 16. Legend switch actuated breakers shall comply with the dimension and separation criteria shown on figure 17.

5.9.19 Printed circuit boards.

5.9.19.1 Mounting. Printed circuit boards shall be designed and mounted for ease of removal and replacement, considering such factors as finger access, gripping aids, and resistance created by the mounting device.

5.9.19.2 Feedback. Appropriate feedback shall be provided to ensure that the technician knows when the board is securely connected.

5.9.20 Stored energy devices.

5.9.20.1 Release or constrain energy. Devices that operate under stored energy (e.g., springs under compression, shock absorbers operated by pneumatic pressure, pressurized bottles) shall be designed so the energy can be safely released or constrained before any maintenance tasks are performed.

5.9.20.2 Apparent to maintainer. The means of release or constraint shall be immediately apparent to the maintainer.

5.9.20.3 Inadvertent activation. The means of release or constraint shall be designed so that the means cannot be inadvertently activated once it has been deactivated.

5.9.20.4 Labeling.

5.9.20.4.1 Stored energy devices. All stored energy devices shall be labeled as such.

Downloaded from http://www.everyspec.com

5.9.20.4.2 Hazard warning sign. All stored energy devices shall have a DANGER hazard warning sign attached to the device.

5.9.21 Diagnostics and troubleshooting. All equipment and systems shall be designed to facilitate diagnostics and troubleshooting. Rapid and positive fault detection and isolation of defective items shall be provided to permit their prompt removal and replacement. Wherever possible, equipment shall have an automatic fault detection and isolation capability. For the appropriate level of lowest replaceable unit (LRU), components shall provide built-in test (BIT)/built-in test equipment (BITE) or other easily identifiable evidence of their status (e.g., a blown fuse). Replacement parts shall be tested prior to installation. To the degree practical, self-test fault and error messages shall be provided.

5.9.22 Hydraulic systems.

5.9.22.1 Standardization. Connectors in hydraulic systems shall be of standard design and handled with standard tools.

5.9.22.2 Identification. Inlets, outlets, and connecting lines in hydraulic systems shall be identified at least every 457 millimeters (18 inches) and at both ends.

5.9.22.3 Drain cocks. All drain cocks shall be closed when the handle is in the down position.

5.9.22.4 Seals. Seals that are visible externally after they are installed shall be used. Seals shall not protrude or extrude beyond the coupling. Couplings shall use permanent seals rather than seals that must be removed and replaced.

5.9.22.5 Pressure relief. Hydraulic systems shall be designed to provide for safe release of pressurized lines and reservoirs, capture of released fluids, and ease of safe isolation of non-pressurized from pressurized systems.

5.9.22.6 Mechanical stops. The design of hydraulic systems shall provide mechanical stops for valve handles to prevent the valves from opening because of vibration.

5.9.22.7 Self-sealing couplings. Self-sealing couplings shall be provided on hydraulic systems.

5.9.22.8 Automatic bleeding. The design shall provide for automatic bleeding of hydraulic systems whenever possible.

5.10 Workspace design.

5.10.1 General. Unless otherwise noted herein, the following criteria apply to ground installations and, as practical, to airborne, ground vehicle, and shipboard installations.

5.10.2 Workspace provision.

5.10.2.1 Provision of workspace. Workspace shall be provided to perform all operational and maintenance tasks by the central 90 percent accommodation for whatever specific range and type of user population is specified by the procuring organization (see 6.2) while wearing the appropriate (e.g., winter or PPE) clothing and using the required tools.

5.10.2.2 Consideration of personnel. In establishing the workspace, consideration shall be given to the number of personnel required to perform the work and the body positions required to do the work.

5.10.2.3 Kick space. All cabinets, consoles, and work surfaces that require an user to stand or sit close to their front surfaces shall contain a kick space at the base at least 10 centimeters (4.0 inches) deep and 10 centimeters (4.0 inches) high to allow for protective or specialized footwear.

5.10.2.4 Guards. Guards shall be provided around all exposed rotating equipment, as well as other dangerous situations (e.g., hot or cold points, exposed electrical wiring, crushing points). Removal of guards shall not be possible without special tools. Quick fasteners shall not be used. Removal of guards shall stop the operation of the equipment which cannot start again until the guard is replaced. Guards shall be accessible from at least two sides (a guard over a rotating shaft shall be accessible from either side of the shaft).

Downloaded from http://www.everyspec.com

5.10.2.5 Handles. Handles on cabinets and consoles shall be recessed whenever practicable, to eliminate projections on the surface. If handles cannot be recessed, they shall be configured, located, and oriented to preclude injuring personnel or entangling clothing or equipment.

5.10.2.6 Flushing, draining, and venting. Flushing, draining and venting facilities shall be provided to discharge in a manner that does not place the contents of the pipe onto walking surfaces or into work areas where personnel could be hit by the discharge or become a hazard. All valves shall be installed in accordance with 5.15.

5.10.2.7 Work space.

5.10.2.7.1 Free floor space size. Free floor space of not less than 122 centimeters (4.0 feet) for the breadth of the console shall be provided in front of each console.

5.10.2.7.2 Free floor space criteria. For equipment racks that require maintenance, free floor space shall be provided in accordance with the criteria listed below.

5.10.2.7.3 Depth of work area. Depth of work area shall meet the following requirements:

a. Clearance from the front of the rack to the nearest facing surface or obstacle shall be not less than 107 centimeters (42 inches) for the breadth of the console.

b. The minimum space between rows of cabinets shall be 20 centimeters (8.0 inches) greater than the depth of the deepest drawer (equipment) or cabinet.

c. Lateral workspace for racks having drawers or removable equipment weighing less than 20 kilograms (44 pounds) shall be not less than 46 centimeters (18 inches) on one side and 10 centimeters (4.0 inches) on the other (measured from the drawers or equipment in the extended position).

d. Lateral workspace for such racks with removable equipment weighing 20 kilograms (44 pounds) or more shall be not less than 46 centimeters (18 inches) on each side.

5.10.2.8 Storage space. Adequate space shall be provided on consoles or immediate work space for storing manuals, worksheets, and other required materials to include basic operational equipment.

5.10.2.9 Pull space. Pull spaces provided for maintenance or repair (e.g., areas needed for the pulling of tube bundles from heat exchangers or condensers) shall be kept clear of all piping, cable trays, panels, and any other obstructions. The pull space shall provide room for the personnel performing the tasks, tools required, lifting or support equipment, and transport devices (if used) to move the item from the area.

5.10.2.10 Skid layout. Pumps, compressors, turbines, or other pieces of equipment that are mounted on skids or other packages, then placed in the vessel or structure as a unit, shall be placed at the periphery of the skid for ease of access for maintenance.

5.10.2.11 Control/display accessibility. All controls and displays shall be reachable and readable from the normal work body postures or positions without having to assume awkward or uncomfortable postures.

5.10.2.12 Eliminate interference.

5.10.2.12.1 Eliminate interference among crewmembers. The workplace shall be designed to eliminate interference among crewmembers during operation or maintenance.

5.10.2.12.2 Avoid simultaneous tasks. Multiple, simultaneous tasks shall be avoided unless the design has been specifically created to allow such tasks without interfering with each other.

5.10.2.12.3 Workbench location. Workbenches shall not be located within 1.0 meter (3.0 feet) of rotating shafts, hot or cold piping, or any other hazard that a crewmember could come in contact with due to unexpected ship motion or other circumstance unless the hazard is guarded.

5.10.2.12.4 Reach limitations. Maximum effective forward reach (i.e., able to grasp and turn/push/pull) shall be 610 millimeters (24 inches) from the front of the user's body.

Downloaded from http://www.everyspec.com

5.10.2.12.5 Lifting forward reach. Jobs requiring the user to lift more than 3.0 kilograms (7.0 pounds), or produce torque (e.g., turning a wrench), shall be kept within 305 millimeters (12 inches) of the front of the user's body. If a hazard (e.g., hot surface, electrical contact) exists within these reach envelopes, it must be guarded, removed, or moved beyond the maximum reach of the user.

5.10.3 Workstation design.

5.10.3.1 Standing operations. Whenever possible, workspace shall be designed so users can do routine, frequent, or short-term jobs while standing. Advantages of a standing position include the following:

a. User's arms can apply more muscular force and make larger movements.

b. Users can move to see and use components in areas that would be inaccessible to seated users.

c. Users can change positions, to reduce fatigue and boredom; many standing tasks can be done in either a sitting or a standing position.

d. Standing saves space; the users can use flat working surfaces, without knee room.

5.10.3.1.1 Window placement. The lower edge of the window shall be no more than 1.32 meters (52 inches) and the upper edge no less than 1.85 meters (74 inches) above the deck, except for forward bridge windows which shall be no less than 1.98 meters (79 inches) above the deck. Where reflection from window glass could be a problem, the window shall be angled from the vertical, top-out, and bottom-in 15 degrees, but in no case shall the angle be less than 8.0 degrees or more than 25 degrees.

5.10.3.1.2 Work surface. Unless otherwise specified (see 6.2), work surfaces to support documents such as job instruction manuals or worksheets shall be 90 to 93 centimeters (35.4 to 36.6 inches) above the standing surface. If the work surface is being used for locating certain types of controls (joystick, track ball, and keyboards), it shall be 102 to 107 centimeters (40.1 to 42.1 inches) above the standing surface. Care shall be taken, when combining a horizontal workspace and a control panel, to ensure that users will have adequate workspace (minimum of 25 centimeters (9.8 inches) deep) and that they will be able to reach the control panel (maximum of 40 centimeters (15.7 inches) deep).

5.10.3.1.3 Display placement, normal. Visual displays mounted on vertical panels and used in normal equipment operation shall be mounted 104 to 178 centimeters (41 to 70 inches) above the standing surface. Where exclusive use by male personnel is specified (see 6.2), the equipment shall be mounted 104 to 188 centimeters (41 to 74 inches) above the standing surface.

5.10.3.1.4 Display placement, special. Displays requiring precise and frequent reading shall be mounted 140 to 165 centimeters (55 to 65 inches) above the standing surface. Where exclusive use by male personnel is specified (see 6.2), the equipment shall be mounted 140 to 175 centimeters (55 to 69 inches) above the standing surface.

5.10.3.1.5 Control placement, normal. All controls mounted on a vertical surface and used in normal equipment operation shall be mounted 76 to 188 centimeters (30 to 70 inches) above the standing surface. Where exclusive use by male personnel is specified (see 6.2), the equipment shall be mounted 86 to 188 centimeters (34 to 74 inches) above the standing surface.

5.10.3.1.6 Control placement, special. Controls requiring precise or frequent operation and emergency controls shall be mounted 86 to 140 centimeters (34 to 55 inches) above the standing surface and no farther than 53 centimeters (21 inches) laterally from the centerline. Where exclusive use by male personnel is specified (see 6.2), the equipment shall be mounted 86 to 145 centimeters (34 to 57 inches) above the standing surface.

5.10.3.1.7 Overhead reach. Where overhead reach is required for a standing user to operate a control, the maximum extended reach (i.e., pushing a button), and the maximum gripping reach (i.e., grasping a knob or turning a handle) shall be in accordance with table XLV. These dimensions are appropriate to the central 90 percent accommodation.

Downloaded from http://www.everyspec.com

TABLE XLV. Maximum overhead extended and gripping reach.

Max extended reach		**Max gripping reach**	
Males	Females	Males	Females
205.7 cm (81 in)	195.6 cm (77 in)	205.7 cm (81 in)	195.6 cm (77 in)

5.10.3.1.8 Control mounting height. Controls mounted on a vertical surface such as a bulkhead or panel for use by a standing person shall be mounted as shown on figure 60.

Downloaded from http://www.everyspec.com

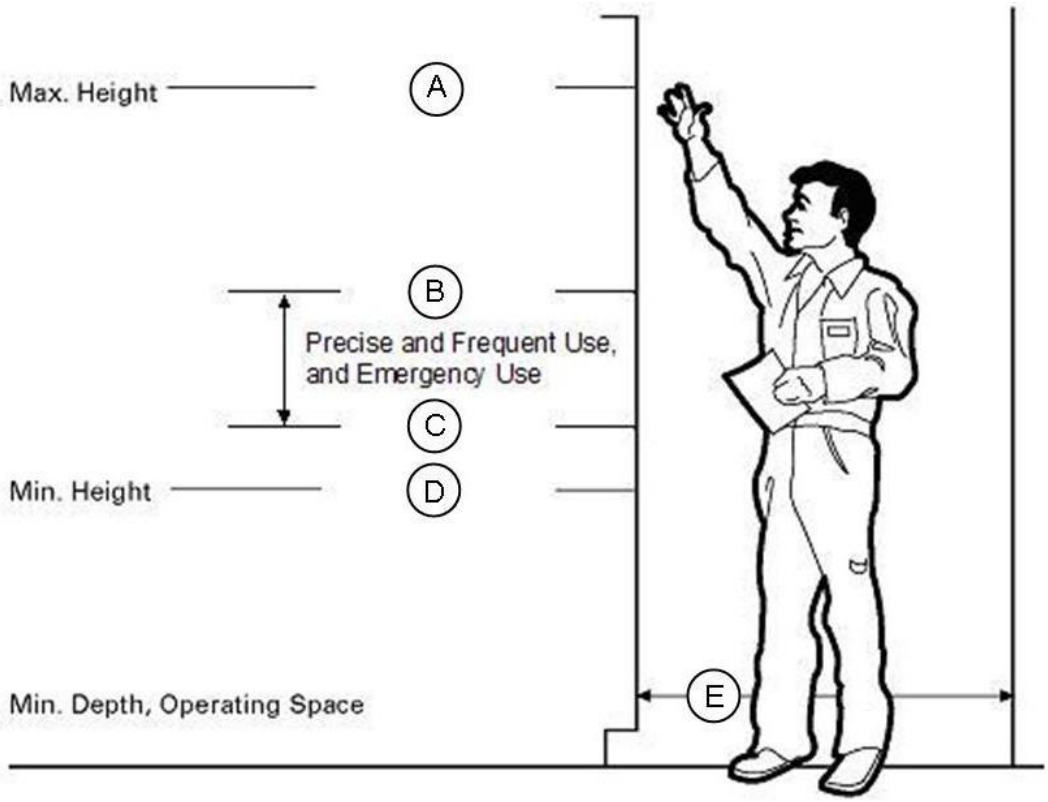

Dimension	Value
Maximum height (A)	188 cm (74 in)
Preferred max. height [1/] (B)	139.7 cm (55 in)
Preferred min. height [1/] (C)	86.4 cm (34 in)
Minimum height (D)	76.2 cm (30 in)
Preferred min. depth [2/] (E)	106.77 cm (42 in)
Minimum depth (E)	94 cm (37 in)

NOTES:

[1/] Preferred dimensions are for those controls that require precise, frequent, or emergency use.

[2/] The dimensions listed accommodate the central 90 percent of the anticipated user population.

FIGURE 60. Control mounting height.

5.10.3.1.9 Display mounting height. Displays mounted on a vertical surface such as a bulkhead or panel for use by a standing person shall be mounted as shown on figure 61.

Downloaded from http://www.everyspec.com

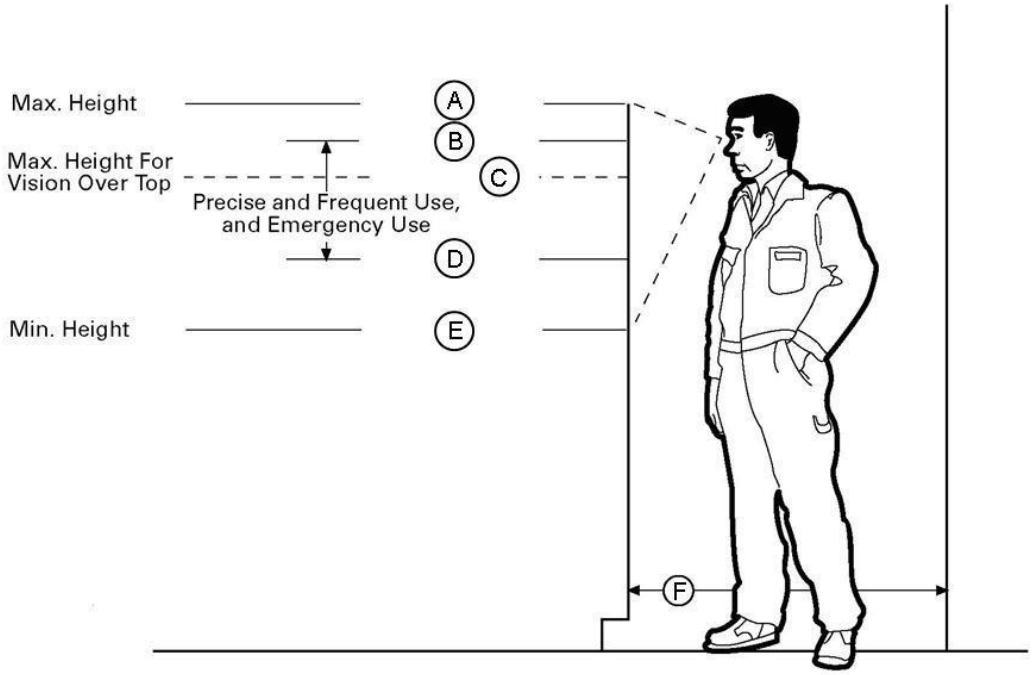

Dimension	Value
Maximum height (A)	177.8 cm (70 in)
Preferred max. height [1/] (B)	165.1 cm (65 in)
Maximum lookover height [1/] (C)	150.1 cm (59 in)
Preferred min. height [1/] (D)	139.7 cm (55 in)
Minimum height (E)	104 cm (41 in)
Preferred min. depth (F)	104 cm (41 in)
Minimum depth (F)	94 cm (37 in)

NOTES:

[1/] Preferred dimensions are for those controls that require precise, frequent, or emergency use.

FIGURE 61. Display mounting height.

5.10.3.1.10 Dimensions. Dimensions for standing workspace shall be designed as shown on figure 62.

Downloaded from http://www.everyspec.com

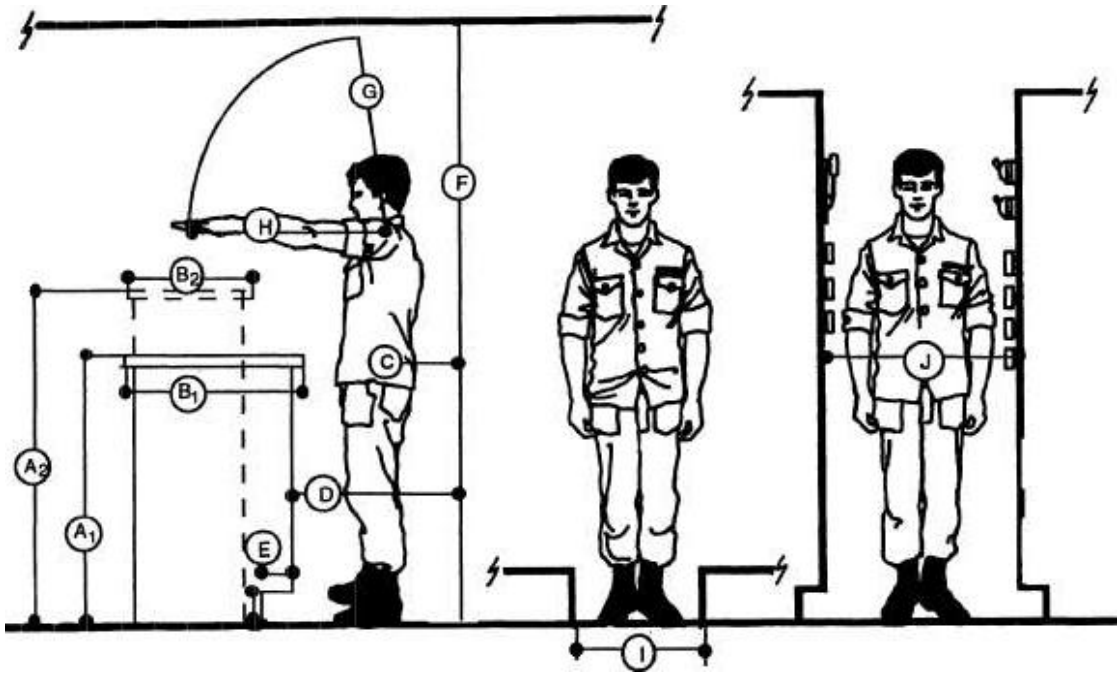

Work benches				
Standard type	A.1	Height	0.91 m (2.98 feet) above floor	
	B.1	Width	0.99 m (3.24 feet)	
Podium type	A.2	Height	1.04 m (3.4 feet) above floor	
	B.2	Width	0.91 m (2.98 feet)	
Work clearances				
		Minimum	Preferred	Arctic
C.	Passing body depth	33cm (12.9 in)	38 cm (14.9 in)	38 cm (14.9 in)
D.	Standing space	76 cm (29.9 in)	91 cm (35.8)	
E.	Foot space	10 x 10 cm (3.9 x 3.9 in)		
F.	Overhead clearance	185.5 cm (73 in)	203 cm (79.9 in)	193 cm (75.9 in)
G.	Maximum overhead reach		68.5 cm (26.9)	63.5 cm (25 in)
H.	Maximum depth of reach		58.5 cm (23 in)	58.5 cm (23 in)
I.	Walking space width	30.5 cm (12 in)	38 cm (14.9 in)	38 cm (14.9 in)
J.	Passing body width	51 cm (20 in)	81 cm (31.8 in)	81 cm (31.8 in)

FIGURE 62. Standing workspace dimensions.

5.10.3.2 Seated operations.

5.10.3.2.1 Work surface width and depth. A lateral work space not less than 76 centimeters (30 inches) wide and 40 centimeters (16 inches) deep shall be provided whenever practicable.

5.10.3.2.2 Work surface height. Unless otherwise specified (see 6.2), desk tops and writing tables shall be 74 to 79 centimeters (29 to 31 inches) above the floor.

Downloaded from http://www.everyspec.com

5.10.3.2.3 Writing surfaces. If consistent with user reach requirements, writing surfaces on equipment consoles shall be not less than 40 centimeters (16 inches) deep and 61 centimeters (24 inches) wide.

5.10.3.2.4 Seating. Seating shall allow the user population to perform their mission functions without degradation of their performance capability in alertness, cognition, strength, or dexterity and without significant or lasting pain or injury (see figure 63).

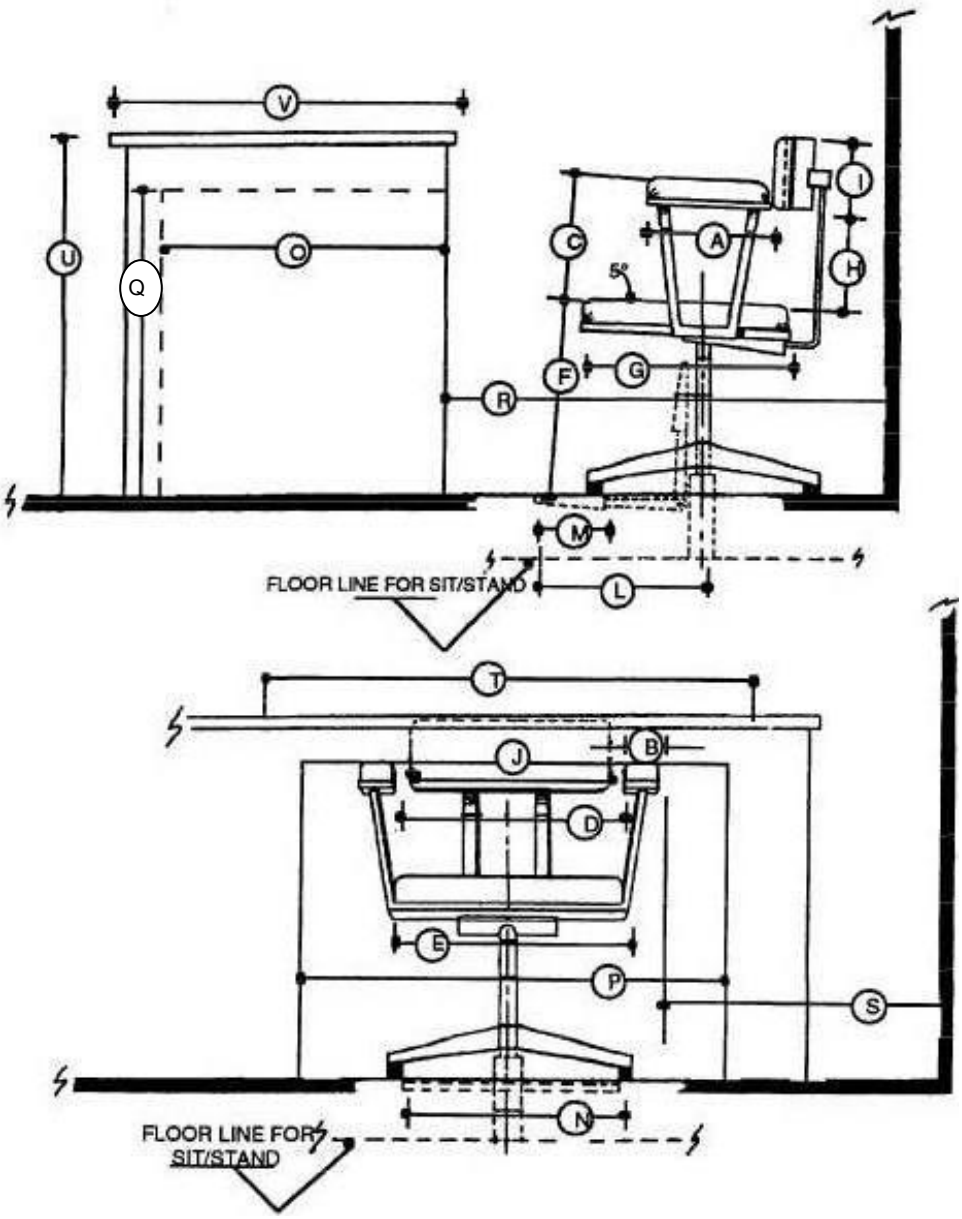

FIGURE 63. Seated workspace dimensions.

Downloaded from http://www.everyspec.com

			Fixed cm (in)	Adjustment [1/] cm (in)
Chair				
Armrests:	A.	Length	25.5 (10)	
	B.	Width	5.0 (1.96)	
	C.	Height	21.5 (8.5)	
	D.	Separation	46 (18.1)	
Seat:	E.	Width	40.5 (15.9)	
	F.	Height	46 (18.1)	±5.0 (1.96)
	G.	Depth	40.5 (15.9)	
Backrest:	H.	Space	15 (5.9)	±5.0 (1.96)
	I.	Height	38 (14.9)	
	J.	Width	40.5 (15.9)	
Footrests:	L.	From center	18 (7.1)	
	M.	Width	15 (5.9)	
	N.	Length	25.5 (10)	
Workspace			**Minimum cm (in)**	**Preferred cm (in)**
	O.	Kneehole depth	46 (18.1)	
	P.	Kneehole width	51 (20.1)	
	Q.	Kneehole height (standard office)	63.5 (25)	
	R.	Desk to wall	81 (31.9)	
	S.	Armrest to wall	61 (24)	
	T.	Lateral work clearance		
		(1) Shoulders	58.5 (23)	
		(2) Elbows	63.5 (25)	
		(3) Best overall	l00 (39.4)	
	U.	Height of work surface	73.5 (28.9)	76 (29.9)
	V.	Width of work surface		
		(1) Elbow rest alone	10 (3.9)	20 (7.8)
		(2) Writing surface	30.5 (12)	40.5 (15.9)
		(3) Desk work area		91 (35.8)

NOTE:
[1/] Adjustability is preferred for these dimensions.

FIGURE 63. Seated workspace dimensions – Continued.

5.10.3.2.5 Window placement. Seated workstations requiring vision through windows shall be designed such that the lower edge of the window is no higher than 1016 millimeters (40 inches) above the floor on which the chair sits.

Downloaded from http://www.everyspec.com

5.10.3.2.6 Compatibility. Work seating shall provide an adequate supporting framework for the body relative to the activities that must be carried out. Chairs to be used with sit-down consoles shall be operationally compatible with the console configuration.

5.10.3.2.7 Seat pan and vertical adjustment. Seat pan and vertical adjustment shall meet the following:

a. The seat pan shall have an adjustable height of 38 to 54 centimeters (15 to 21 inches) in increments of no more than 3.0 centimeters (1.0 inch) each.

b. If the seat height exceeds 53 centimeters (21 inches), a footrest shall be provided.

c. Single-pedestal seats shall have a five-legged base.

d. The seat pan shall have a 0- to 7.0-degree adjustable tilt rearward, be between 38 and 46 centimeters (15 and 18 inches) wide and not more than 40 centimeters (16 inches) deep.

e. Where exclusive use by male personnel is specified (see 6.2), the adjustable height of 40 to 54 centimeters (16 to 21 inches) shall be used.

5.10.3.2.8 Backrest. A supporting backrest that reclines 100 to 115 degrees shall be provided. The backrest shall engage the lumbar and thoracic regions of the back, and support the torso in such a position that the user's eyes can be brought to the "Eye Line" with no more than 8 centimeters (3.0 inches) of forward body movement. The backrest width shall be 30 to 36 centimeters (12 to 14 inches).

5.10.3.2.9 Cushioning and upholstery. Where applicable, both the backrest and seat shall be cushioned with at least 2.5 centimeters (1.0 inch) of compressible material. Upholstery shall be durable, nonslip, and porous. Chairs shall be cushioned whenever users must remain seated for more than an hour or more than 20 percent of the time. Good seat cushions shall have the following characteristics:

a. Have flat, firm shape, but with enough softness to deform.

b. Have resilient material under the cushion to absorb shocks.

c. Support body weight, primarily around the two bony points of the pelvis.

d. Be shaped to follow the inward curve of the lower back, and provide adequate support for it, to relieve strain on the back muscles.

e. Avoid applying pressure under the thighs.

f. Use perforated or ventilated material, to prevent "hotness" or "sweatiness".

g. Allow the sitter to shift positions. (Larger backrests are better, because more support area gives greater opportunity for changing positions.)

5.10.3.2.10 Armrests. Unless otherwise specified (see 6.2), armrests shall be provided. Armrests that are integral with users' chairs shall be at least 5.0 centimeters (2.0 inches) wide and 20 centimeters (8.0 inches) long. Modified or retractable armrests shall be provided when necessary to maintain compatibility with an associated console. Armrests shall be adjustable from 19 to 28 centimeters (7.5 to 11 inches) above the compressed sitting surface. Distance between armrests shall be not less than 46 centimeters (18 inches).

5.10.3.2.11 Seat base. Chairs shall have at least four supporting legs. Swivel chairs shall have five supporting legs. The diameter of the seat base of swivel type chairs shall be 46 centimeters (18 inches).

5.10.3.2.12 Footrests. Whenever the users must work for extended periods in seats higher than 46 centimeters (18 inches) or with work surfaces higher than 76 centimeters (30 inches), footrests shall be provided. Footrests, where provided, shall contain nonskid surfaces. Footrests shall be adjustable from 2.5 to 23 centimeters (1.0 to 9.0 inches) above the floor, not less than 30 centimeters (12 inches) deep, and 30 to 40 centimeters (12 to 16 inches) wide. Footrest inclination shall be 25 to 30 degrees.

5.10.3.2.13 Temporary seats. If there is not enough space to include a permanent seat, a temporary "swing-away" seat shall be considered.

Downloaded from http://www.everyspec.com

5.10.3.2.14 Knee room. Knee and foot room not less than 64 centimeters (25 inches) high, 51 centimeters (20 inches) wide, and 46 centimeters (18 inches) deep shall be provided beneath work surfaces; however, if a fixed footrest or a foot-operated control is provided, the height dimension shall be increased accordingly.

5.10.3.2.15 Display placement, normal. Visual displays mounted on vertical panels and used in normal equipment operation shall be located 15 to 117 centimeters (6.0 to 46 inches) above the sitting surface. Where exclusive use by male personnel is specified (see 6.2), the equipment shall be located 15 to 122 centimeters (6.0 to 48 inches) above the sitting surface.

5.10.3.2.16 Display placement, special. Displays that must be read precisely and frequently shall be located in an area 36 to 89 centimeters (14 to 35 inches) above the sitting surface, and no farther than 53 centimeters (21 inches) laterally from the centerline. Where exclusive use by male personnel is specified (see 6.2), the display shall be located 36 to 94 centimeters (14 to 37 inches) above the sitting surface and no farther than 56 centimeters (22 inches).

5.10.3.2.17 Warning displays. For seated operations consoles requiring horizontal vision over the top, critical visual warning displays shall be mounted not less than 57 centimeters (22.5 inches) above the sitting surface.

5.10.3.2.18 Control placement, normal. Controls mounted on a vertical surface and used in normal equipment operation shall be located 20 to 86 centimeters (8.0 to 34 inches) above the sitting surface. Where exclusive use by male personnel is specified (see 6.2), the controls shall be located 20 to 89 centimeters (8.0 to 35 inches) above the sitting surface.

5.10.3.2.19 Control placement, special. Controls that require precise or frequent operation shall be located 20 to 74 centimeters (8.0 to 29 inches) above the sitting surface. Where exclusive use by male personnel is specified (see 6.2), the controls shall be located 20 to 76 centimeters (8.0 to 30 inches) above the sitting surface.

5.10.3.3 Mobile workspace. Because of space limitations, personnel sometimes have to perform tasks where there is no dedicated workspace. These cases shall be minimized as much as possible. If personnel must work in or pass through such limited spaces, minimum necessary clearances shall be in accordance with figure 62.

5.10.3.4 Work benches.

5.10.3.4.1 Heights. Seated work benches shall be 762 millimeters (30 inches) above the deck and a maximum of 685 millimeters (27 inches) wide, with 610 millimeters (24 inches) preferred.

5.10.3.4.2 Passing room. A minimum clear passing lane of 610 millimeters (24 inches) [762 millimeters (30 inches) preferred] shall be provided behind the seated user.

5.10.3.4.3 Working area. A minimum 1219 millimeters (48 inches) [preferred 1372 millimeters (54 inches)] of clear working area, measured from the edge of the work bench to the nearest obstacle behind the seated user shall also be provided.

5.10.3.4.4 Standard console design. For purposes of standardization, dimensions of consoles, and the units and racks which constitute user work stations shall be in accordance with figure 64. The configurations represented on figure 64 may not be applicable to all design situations. Operational requirements may require unique design solutions. Because of the benefits and economies inherent in a standard console, design shall conform with the standard configurations. As applicable, the selected console design shall accommodate required visibility over the top of the console, user mobility (e.g., “sit”, “stand”, or “sit-stand”), panel space (as in columns B and D of table XLVI), and volume in the area below the writing surface.

Downloaded from http://www.everyspec.com

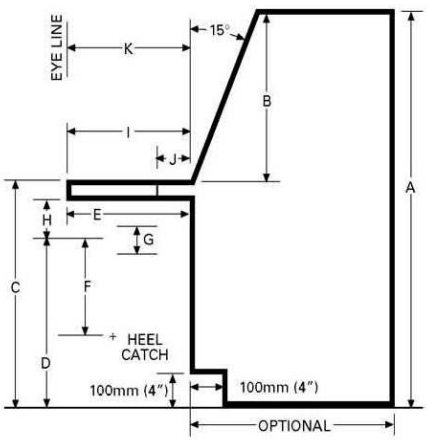

A. 1/	Minimum total console height from standing surface.	
B. 1/	Suggested vertical dimension of panel, including sills.	
C. 1/	Writing surface: shelf height from standing surface.	
D. 1/	Seat height from standing surface at midpoint of "G".	
E. 2/	Minimum knee clearance.	460 mm (18 in)
F. 2/, 3/	Foot support to sitting surface.	460 mm (18 in)
G. 2/	Seat adjustability.	150 mm (6.0 in)
H. 2/	Minimum thigh clearance at midpoint of "G".	190 mm (7.5 in)
I.	Writing surface depth including shelf.	400 mm (16 in)
J.	Minimum shelf depth.	100 mm (4.0 in)
K.	Eye line-to-console front distance.	400 mm (16 in)

FOOTNOTES:

1/ For A through D, see below.

2/ Not applicable to console Types 4 and 5 of table below.

3/ Since this dimension must not be exceeded, a heel catch must be added to the chair if "D" exceeds 400 mm (16 in).

NOTE:

1. A shelf thickness of 25 mm (1.0 in) is assumed. For other shelf thicknesses, suitable adjustments shall be made.

Type of console	**Maximum total console height from standing surface**		**Suggested vertical dimension of panel (including sills)**		**Writing surface: shelf height from standing surface**		**Seat height from standing surface at midpoint of G**		**Maximum console width (not shown)**	
	A		**B**		**C**		**D**			
	m	**in**	**mm**	**in**	**mm**	**in**	**mm**	**in**	**mm**	**in**
1. Sit (with vision over top) 1/	1.170	46	520	20.5	650	25.5	435	17	1120	44
	1.335	52.5	520	20.5	810	32	595	23.5	1120	44
	1.435	56.5	520	20.5	910	36	695	27.5	1120	44
2. Sit (without vision over top)	1.310	51.5	660	26	650	25.5	435	17	1120	44
	1.470	58	660	26	810	32	595	23.5	1120	44
3. Sit-stand (with standing vision over top)	15.70	62	660	26	910	36	695	27.5	1120	44
	1.535	60.5	620	24.5	910	36	695	27.5	1120	44
4. Stand (with vision over top)	1.535	60.5	620	24.5	910	36	NA	NA	1524	60
5. Stand (without vision over top)	1.830	72	910	36	910	36	NA	NA	1524	60

NOTE:

1/ The range in "A" is provided to allow latitude in the volume of the lower part of the console; note relationship to "C" and "D".

FIGURE 64. Standard console dimensions.

Downloaded from http://www.everyspec.com

TABLE XLVI. Standard console dimensions.

	A		B		C	D	E
	Console height 1/	Console height 2/	Vertical dimension 3/	Console height 2/	Writing surface 4/	Seat height 5/	Maximum console width
1. Sit 7/ 8/	117 cm (46 in)	121 cm (47.5 in)	52 cm (20.5 in)	56 cm (22 in)	65 cm (25.5 in)	43.5 cm (17 in)	112 cm (44 in)
	133.5 cm (52.5 in)	137 cm (54 in)	52 cm (20.5 in)		81 cm (32 in)	59.5 cm (23.5 in)	112 cm (44 in)
	143.5 cm (56.5 in)	147 cm (58 in)	52 cm (20.5 in)		91 cm (36 in)	69.5 cm (27.5 in)	112 cm (44 in)
2. Sit 9/	131 cm (51.5 in)		66 cm (26 in)		65 cm (25.5 in)		91 cm (36 in)
	147 cm (58.0 in)		66 cm (26 in)		81 cm (32 in)		91 cm (36 in)
	157 cm (62.0 in)		66 cm (26 in)		91 cm (36 in)		91 cm (36 in)
3. Sit-stand 10/	153.5 cm (60.5 in)	157 cm (62 in)	62 cm (24.5 in)	66 cm (26 in)	91 cm (36 in)	69.5 cm (27.5 in)	91 cm (36 in)
4. Stand 11/	153.5 cm (60.5 in)	157 cm (62 in)	62 cm (24.5 in)	66 cm (26 in)	91 cm (36 in)	N/A	112 cm (44 in)
5. Stand 12/	183 cm (72 in)		91 cm (36 in)		91 cm (36 in)	N/A	91 cm (36 in)

NOTES:

1/ Maximum total console height from standing surface.

2/ Maximum total console height from standing surface where exclusive use by male personnel is specified.

3/ Suggested vertical dimension of panel (including sills).

4/ Shelf height from standing surface.

5/ Seat height from standing surface at midpoint of G.

6/ Maximum console width is not shown.

7/ The range in "A" is provided to allow latitude in the volume of the lower part of the console. Note relationship to "C" and "D".

8/ Sitting with vision over top.

9/ Sitting without vision over top.

10/ Sit-stand with vision over top while standing.

11/ Standing with vision over top.

12/ Standing without vision over top.

5.10.3.4.5 Console selection. On the basis of 5.10.3.4.4, the configuration that will best meet the requirements shall be selected from the five console types represented on figure 64.

5.10.3.4.6 Computer workstation. Dimensions for a seated computer workstation are provided on figure 65 and in table XLVII.

Downloaded from http://www.everyspec.com

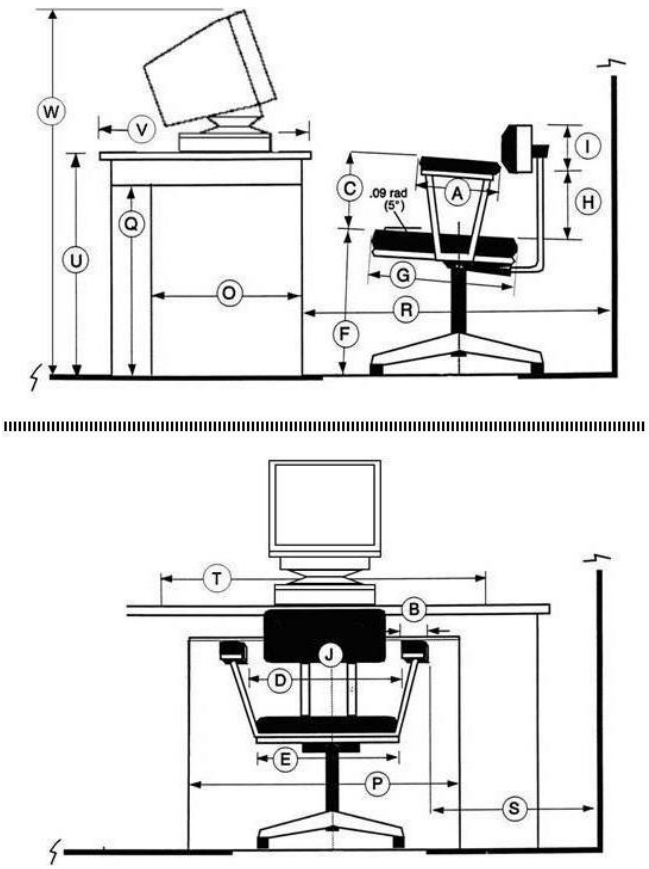

FIGURE 65. Computer seated workstation dimensions.

Downloaded from http://www.everyspec.com

TABLE XLVII. Seated computer workstation dimensions.

Dimensions			Fixed/min		Adjust
			cm	in	
Armrest	A	Length	25.4	10	
	B	Width	5.0	2.0	
	C	Height	21.6	8.5	19.1 cm (7.5 in) to 27.9 cm (11 in)
	D	Separation	45.7	18	
Seat pan	E	Width	40.6	16	
	F	Height	38.1	15	Seat height shall be adjustable from the minimum height up 12.7 cm (5.0 in) – in increments of no more than 2.5 cm (1.0 in).
	G	Depth	38.1	15	Up to 43.2 cm (17 in)
		Angle from horizontal			0 – 10 cm (5.0 in preferred)
		Pan-backrest angle			90 – 100 cm (35 – 39.3 in)
Backrest	H	Space	15.2	6.0	Full backrest with no space between seat pan and bottom of backrest is preferred.
	I	Height	38	15	Backrest height shall be adjustable unless it is solid from seat pan to minimum height shown. Adjustments shall be in increments no greater than 2.5 cm (1.0 in).
	J	Width	40.6	16	46.2 cm (18 in) preferred
Dimensions			**Minimum**		**Preferred**
			cm	**in**	
Workspace	O	Kneehole depth (at knee height)	38.1	15	
		Kneehole depth (at deck level)	59.7	23.5	
	P	Kneehole width	50.8	20	61 cm (24 in)
	Q	Kneehole height	63.4	25	
	R	Desk to wall	81.3	32	
	S	Chair to wall	38.1	15	
	T	Desk width	137.2	54	
		Work surface width	61.0	24	
	U	Height of work surface keyboard (adjustable)			61 cm (24 in) – 71.1 cm (28 in) independent adjustable keyboard support surface
		Height of work surface keyboard (fixed)	76.2	30	Fixed keyboard support surface, e.g., desktop.
	V	Desk depth	76.2	30	91.4 cm (36 in)
		Work surface depth	61.0	24	76.2 cm (30 in)

5.10.3.4.7 Sitting at tables. For single or multiple persons sitting at tables or other non-desk type of workstations, the dimensions shown on figure 66 shall be provided.

Downloaded from http://www.everyspec.com

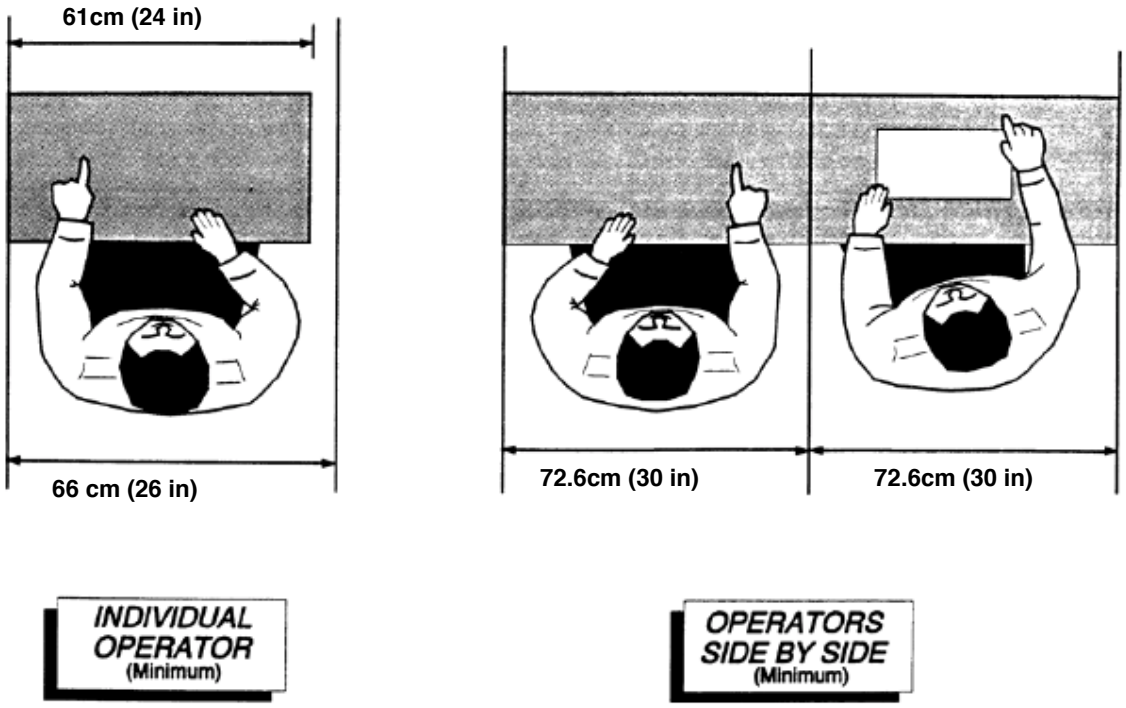

FIGURE 66 .Dimensions for single or multiple personnel at a table or other duty station not requiring a desk.

5.10.3.4.8 Stool seating. Stools may be used for temporary seating, especially where the user frequently moves from a sitting to standing posture. Stool heights shall range from 711 to 813 millimeters (28 to 32 inches) from the floor to the top of the seat.

5.10.3.4.9 Seated overhead reach. Where overhead reach is required for a seated user to operate a control (i.e., pushing a button), the maximum extended reach shall be 1321 millimeters (52 inches) above the seated surface for males, 1245 millimeters (49 inches) for females. Maximum overhead reach for gripping reach (i.e., grasping a knob or turning a handle) shall be 1270 millimeters (50 inches) above the seated surface for males, 1168 millimeters (46 inches) for females.

5.10.3.4.10 Control mounting heights. Mounting heights for controls mounted on a vertical surface to be used by a seated user shall be as shown on figure 67.

Downloaded from http://www.everyspec.com

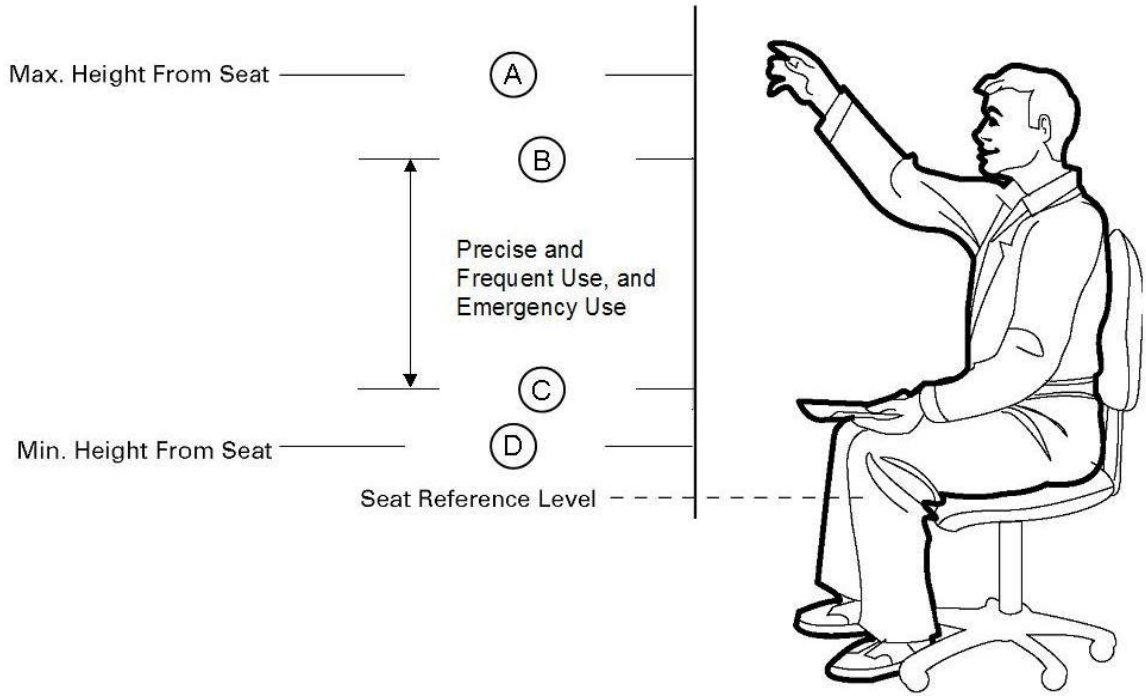

Dimension [1/]	Value
Maximum height (A)	106.7 cm (42 in)
Preferred max. height [2/] (B)	86 cm (32 in)
Preferred min. height [2/] (C)	20.3 cm (8.0 in)
Minimum height (D)	15 cm (6.0 in)

NOTES:

1/ The dimensions listed accommodate the central 90 percent of the anticipated user population.

2/ Preferred dimensions are for those controls that require precise, frequent, or emergency use.

FIGURE 67. Control mounting heights for seated personnel.

5.10.3.4.11 Display mounting heights. Mounting heights for displays on a vertical flat surface such as a panel or bulkhead for use by a seated person shall be as shown on figure 68.

Downloaded from http://www.everyspec.com

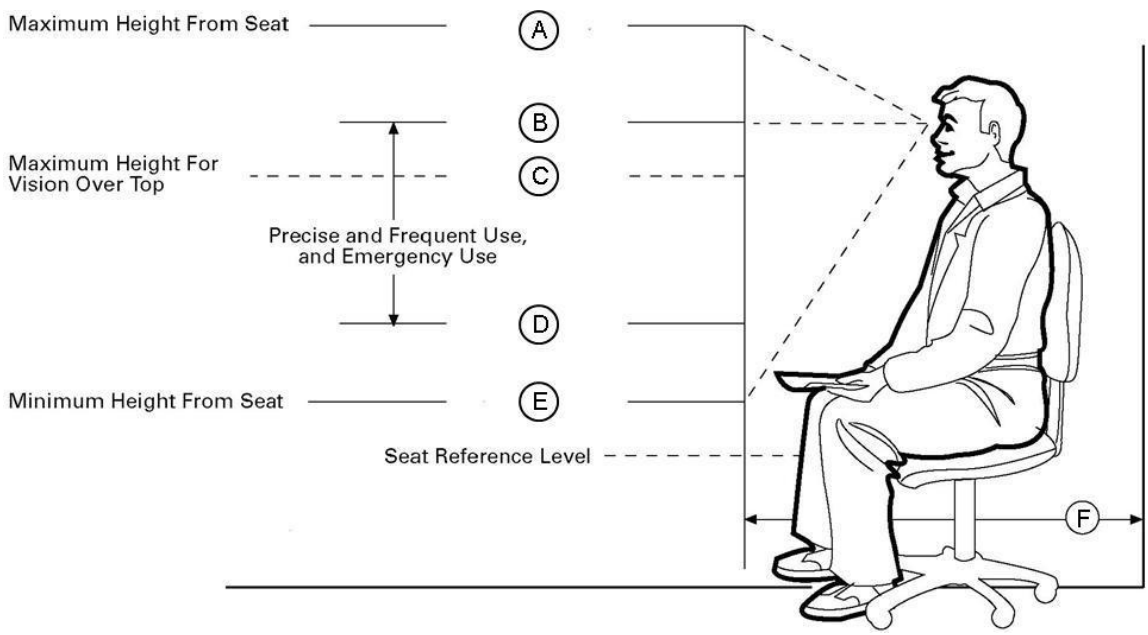

Dimension [1/]	Value
Maximum height (A)	111.8 cm (44 in)
Preferred max. height [2/] (B)	90.0 cm (35 in)
Max. height for vision over top (C)	68.6 cm (27 in)
Preferred minimum height (D)	35.6 cm (14 in)
Minimum height, (E)	15.2 cm (6.0 in)
Min. workspace depth (F)	106.7 cm (42 in)

NOTES:

1/ The dimensions listed accommodate the central 90 percent of the anticipated user population.

2/ Preferred dimensions are for those controls that require precise, frequent, or emergency use.

FIGURE 68 Display mounting heights for seated personnel.

5.10.3.4.12 Clearance behind seated workstations. Clearance behind seated workstations shall meet the following:

a. Clearance behind seated (chair) workstations to allow a person to walk shall be a minimum of 121.9 centimeters (48 inches) with 137.2 centimeters (54 inches) preferred.

b. Clearance behind seated (stool) workstations to allow a person to walk shall be a minimum of 127 centimeters (50 inches) with 142.2 centimeters (56 inches) preferred.

5.10.3.5 Kneeling workspaces.

5.10.3.5.1 Control mounting height. Mounting heights for controls that must be reached and operated from a kneeling position shall be as shown on figure 69.

Downloaded from http://www.everyspec.com

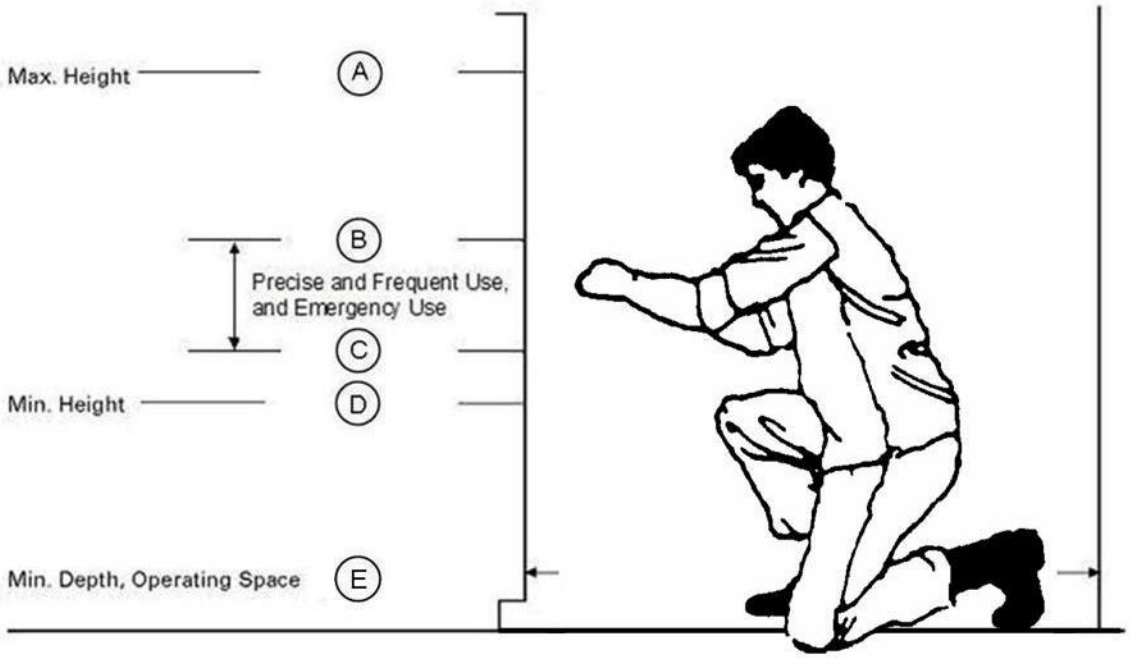

Dimension [1/]	Value
Maximum height (A)	145 cm (57 in)
Preferred max. height [2/] (B)	109 cm (43 in)
Preferred min. height [2/] (C)	54 cm (21 in)
Minimum height (D)	45.7 cm (18 in)
Minimum depth (E)	107 cm (42 in)

NOTES:

1/ The dimensions listed accommodate the central 90 percent of the anticipated user population.

2/ Preferred dimensions are for those controls that require precise, frequent, or emergency use.

FIGURE 69. Control mounting heights for kneeling personnel.

5.10.3.5.2 Display mounting height. Mounting heights for displays mounted on a vertical surface such as a bulkhead or panel for use by a kneeling person shall be as shown on figure 70.

Downloaded from http://www.everyspec.com

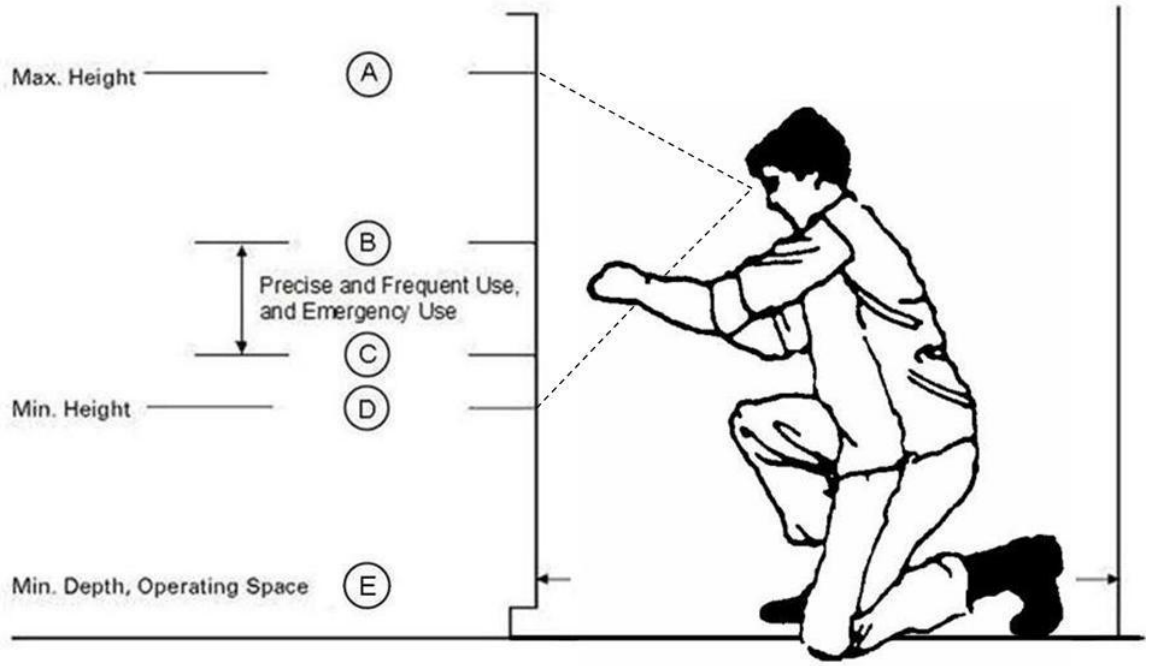

Dimension [1/]	Value
Maximum height (A)	145 cm (57 in)
Preferred max. height [2/] (B)	132 cm (52 in)
Preferred min. height [2/] (C)	95 cm (37 in)
Minimum height (D)	71.1 cm (28 in)
Minimum depth (E)	115 cm (45 in)

NOTES:

[1/] The dimensions listed accommodate the central 90 percent of the anticipated user population.

[2/] Preferred dimensions are for those controls that require precise, frequent, or emergency use.

FIGURE 70. Display mounting heights for kneeling personnel.

5.10.3.5.3 Work area height. The clear area required for a kneeling worker at a task site shall be 144.8 centimeters (57 inches).

5.10.3.5.4 Work area work height. The clear area required for a kneeling worker to manipulate equipment or machinery at a task site shall be 68.6 centimeters (27 inches).

5.10.3.5.5 Work area depth. The clear area required for a kneeling worker at a task site shall be 119.4 centimeters (47 inches).

5.10.3.5.6 Work area work depth. The additional clear area required for a kneeling worker to perform work at a task site shall be 127 centimeters (50 inches).

Downloaded from http://www.everyspec.com

5.10.3.6 Squatting workspaces. Mounting heights for controls mounted on a vertical surface such as a bulkhead or panel for use by a person in a squatting position shall be as shown on figure 71. Mounting heights for displays mounted on a vertical surface such as a bulkhead or panel for use by a person in a squatting position shall be as shown on figure 72.

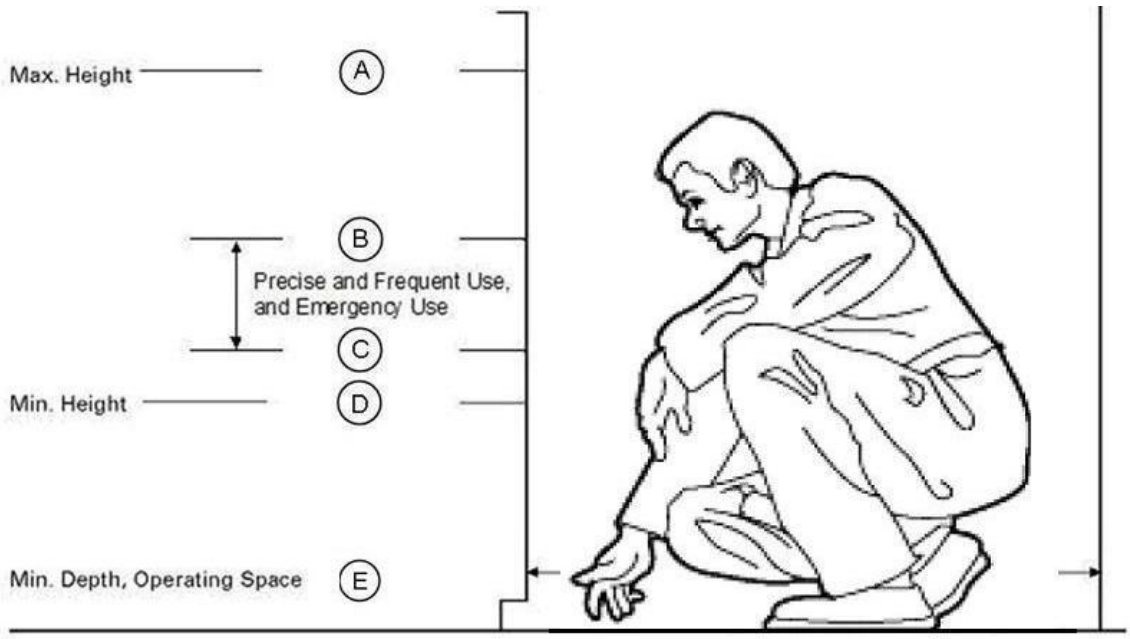

Dimension [1/]	Value
Maximum height (A)	125 cm (49 in)
Preferred max. height [2/] (B)	81.3 cm (32 in)
Preferred min. height [2/] (C)	40 cm (16 in)
Minimum height (D)	36 cm (14 in)
Minimum depth (E)	91.5 cm (36 in)

NOTES:

1/ The dimensions listed accommodate the central 90 percent of the anticipated user population.

2/ Preferred dimensions are for those controls that require precise, frequent, or emergency use.

FIGURE 71. Control mounting heights for squatting personnel.

Downloaded from http://www.everyspec.com

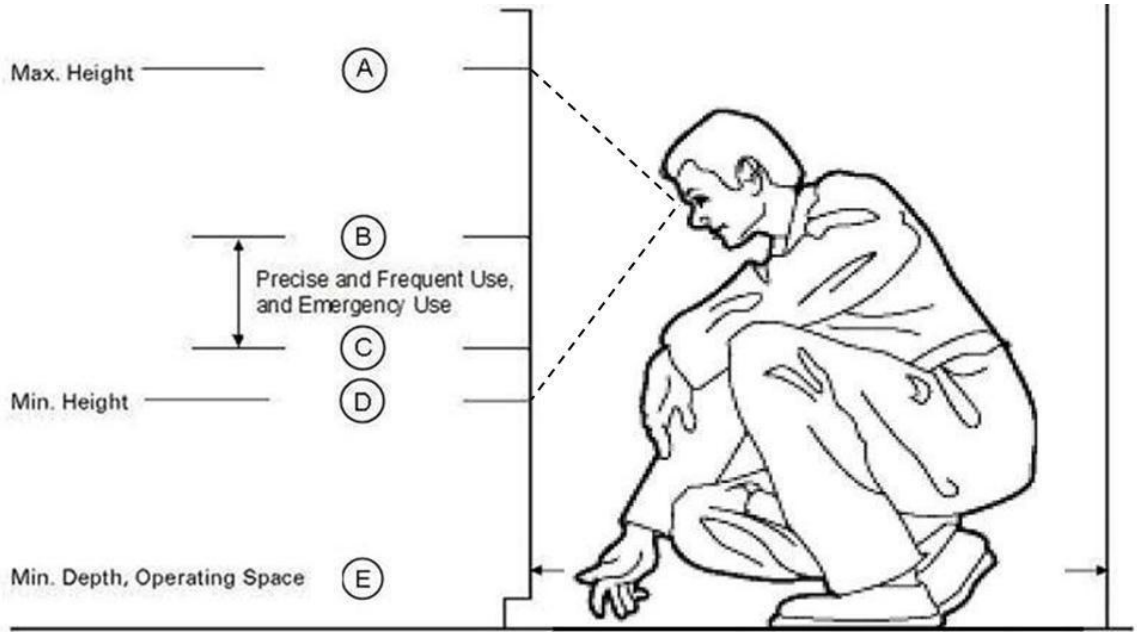

Dimension [1/]	Value
Maximum height (A)	125 cm (49 in)
Preferred max. height [2/] (B)	102 cm (40 in)
Preferred min. height [2/] (C)	63.5 cm (25 in)
Minimum height (D)	50.8 cm (20 in)
Minimum depth (E)	105 cm (41 in)

NOTES:

[1/] The dimensions listed accommodate the central 90 percent of the anticipated user population.

[2/] Preferred dimensions are for those controls that require precise, frequent, or emergency use.

FIGURE 72. Display mounting heights for squatting personnel.

5.10.3.6.1 Work area height. The clear area required for a squatting worker at a task site shall be 129.5 centimeters (51 inches).

5.10.3.6.2 Work area depth. The clear area required for a squatting worker at a task site shall be 91.4 centimeters (36 inches).

5.10.3.6.3 Work area work depth. The additional clear area required for a squatting worker to perform work at a task site shall be 115.6 centimeters (45.5 inches).

Downloaded from http://www.everyspec.com

5.10.3.6.4 Display surfaces. Display surfaces shall meet the following:

a. Primary display surface. The primary visual surface on consoles or instrument panels shall be reserved for displays which are used frequently or are critical to successful operation. Special cases, where controls and displays are combined, or control and display compatibility is important (even though the displays are of secondary importance), may warrant placing them on this surface.

b. Secondary display surface. The secondary display surfaces shall be located above or to the side of the primary display surfaces. These surfaces shall be used for displays that are used infrequently during operations (e.g., setup, adjustment, or operationally noncritical functions).

c. Design principles. The designer shall use the principles listed below in laying out displays on the console or instrument panel:

(1) Frequently monitored displays shall be within the user's preferred viewing area.

(2) Indicators that are used for long, uninterrupted periods shall be in the preferred position.

(3) The preferred distance to displays is 63.5 centimeters (25 inches).

(4) The viewing distance to displays shall not be less than 25 to 30 centimeters (9.8 to 11.8 inches) for short viewing periods, and preferably not less than 40 centimeters (15.7 inches).

(5) Displays requiring accurate readout shall be located closer to the user's line of sight than displays requiring only gross monitoring.

(6) Displays shall be mounted perpendicular to the line of sight. Angular deviation from the line of sight up to 45 degrees may be acceptable, provided accurate instrument reading is not essential and parallax is not too great.

(7) All instruments and legends shall be readable from the user's normal head position, allowing for normal head rotation and for restrictions imposed by helmets or other head gear.

(8) All displays necessary to support an user activity or sequence of activities shall be grouped together.

(9) Infrequently used displays can be in the periphery (maximum viewing angle) of the visual field.

5.10.3.6.5 Mobile workstation dimensions. Mobile workstations shall be in accordance with the dimensions on figure 73 and table XLVIII below.

Downloaded from http://www.everyspec.com

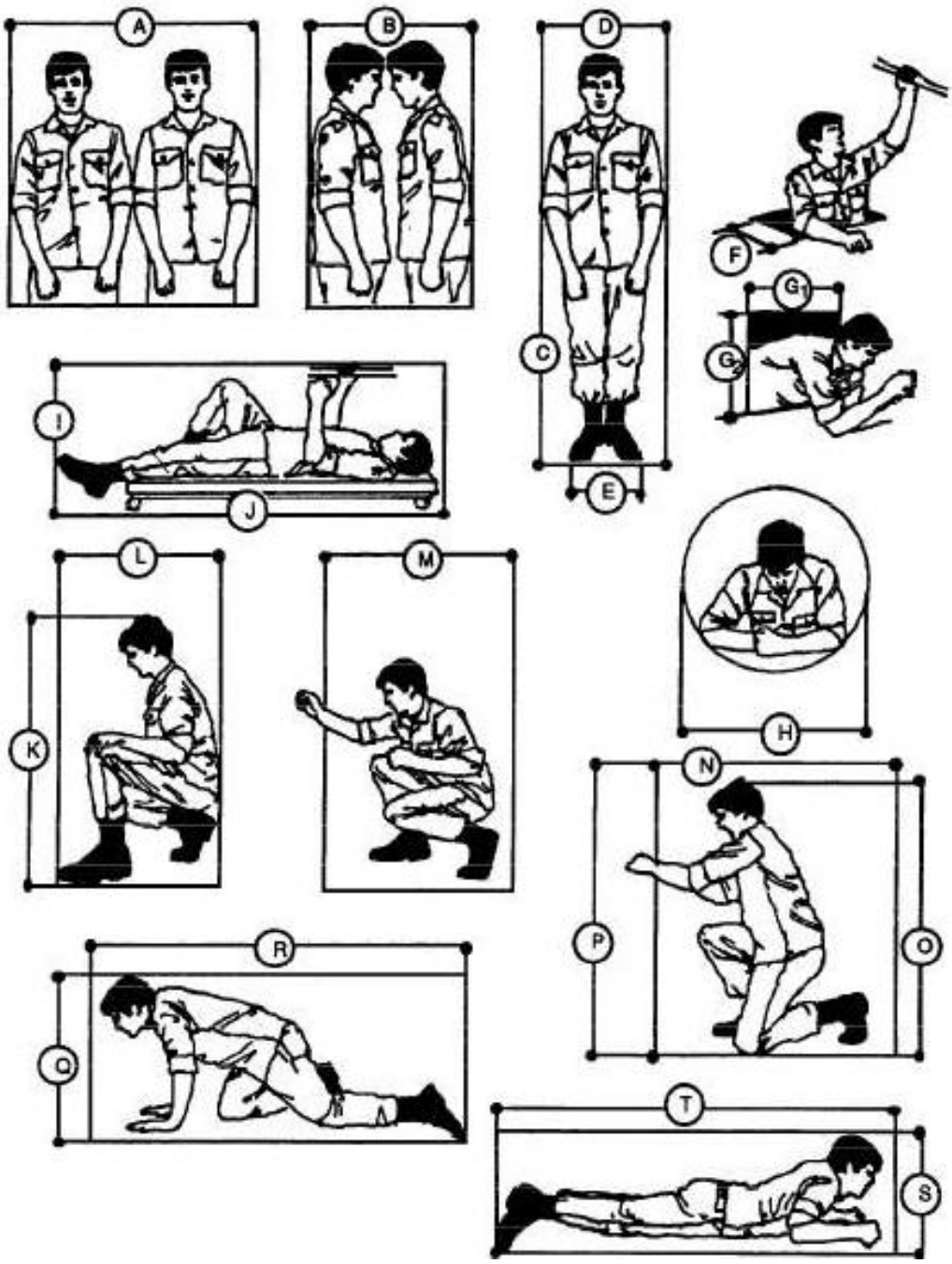

FIGURE 73. Mobile workspace dimensions.

Downloaded from http://www.everyspec.com

TABLE XLVIII. Mobile workspace dimensions.

	Minimum cm (in)	Preferred cm (in)	Arctic clothed cm (in)
A. Two men passing abreast	106 (41.7)	137 (53.9)	153 (60.2)
B. Two men passing facing	76 (29.9)	91 (35.8)	91 (35.8)
Catwalk dimensions			
C. Height	160 (63)	186 (73.2)	191 (75.2)
D. Shoulder width	56 (22)	61 (24)	81 (32)
E. Walking width	30.5 (12)	38 (15)	38 (15)
F. Vertical entry hatch			
Square	45 (17.7)	56 (22)	81 (32)
Round	56 (22)	61 (24)	
G. Horizontal entry hatch			
Shoulder width	53.5 (21)	61 (24)	81 (32)
Height	38 (15)	51 (20)	61 (24)
H. Crawl through pipe (round or square)	63.5 (25)	76 (29.9)	81 (32)
Supine workspace			
I. Height	51 (20)	61 (24)	66 (26)
J. Length	186 (73.2)	191 (75.2)	198 (78)
Squatting workspace			
I. Height	51 (20)	61 (24)	66 (26)
J. Length	186 (73.2)	191 (75.2)	198 (78)
Squatting workspace			
K. Height	122 (48)		129 (51)
L. Width	68.5 (27)	91 (35.8)	
Optimum display area	68.5 (27)	109 (42.9)	
Optimum control area	48.5 (19.1)	86.5 (34)	
Stooping workspace			
M. Width	66 (26)	102 (40.2)	112 (44.1)
Optimum display area	81 (32)	122 (48)	
Optimum control area	61 (24)	99 (39)	
Kneeling workspace			
N. Width	106 (41.7)	122 (48)	127 (50)
O. Height	142 (55.9)		150 (59)
P. Optimum work point		68.5 (27)	
Optimum display area	51 (20)	89 (35)	
Optimum control area	51 (20)	89 (35)	
Kneeling crawl space			
Q. Height	78.5 (30.9)	91 (35.8)	96.5 (38)
R. Length	150 (59)		176 (69.3)
Prone work or crawl space			
S. Height	43 (16.9)	61 (24)	61 (24)
T. Length	286 (112.6)		

Downloaded from http://www.everyspec.com

5.10.3.7 Control surfaces.

5.10.3.7.1 General. In general, the control area is below the area displays are mounted; displays which are closely associated with controls can be mounted on these surfaces. The optimum manual space is that in which hand-operated controls can be manipulated with the greatest speed and accuracy. This space is reserved for controls which must be operated frequently or are critical to operations placing controls in the optimum space permitting rapid and accurate identification, reaching and operation, and location of visual displays near the controls.

5.10.3.7.2 Design principles. The designer shall use the principles listed below in arranging controls on the console:

a. Primary controls shall be located between shoulder level and waist height.

b. Controls shall be located so that simultaneous operation of two controls will not necessitate crossing or interchanging hands.

c. When controls are operated frequently, they shall be located to the left front or right front of the user.

d. Frequently used controls shall be grouped together, unless there are overriding reasons for separating them.

e. Frequently used controls shall be located for right-hand operation.

f. Frequently used controls shall be within a radius of 40 centimeters (15.7 inches) from the normal working position.

g. Occasionally used controls shall be within a radius of 50 centimeters (19.6 inches).

h. Infrequently used controls shall be within a radius of 70 centimeters (27.5 inches).

i. Controls shall be located where the user can see them to check their positions, regardless of the viewing angle.

j. All controls shall be within the maximum reach of the seated user (see figure 74).

k. Controls requiring fine adjustments shall be located closer to the user's line of sight than controls requiring gross positioning.

l. When the user must manipulate controls while monitoring the display, the controls shall be placed close to, and directly below, that display.

m. Controls that are used infrequently shall be placed to one side to prevent inadvertent activation.

n. Occasionally used controls may be mounted behind hinged doors or recessed into the panel to reduce distraction and prevent inadvertent operation. If, because of space constraints, controls must be placed where users locate them without seeing them, designers shall consider these error tendencies:

(1) When controls are above shoulder level, users tend to reach too low.

(2) When controls are on either side of the user, the user tends to reach too far to the rear.

(3) When controls are placed below shoulder level, users tend to reach too high.

o. When controls need to be placed where users cannot see them, shape coding shall be considered in their design to aid the user in detecting the correct control by touch.

Downloaded from http://www.everyspec.com

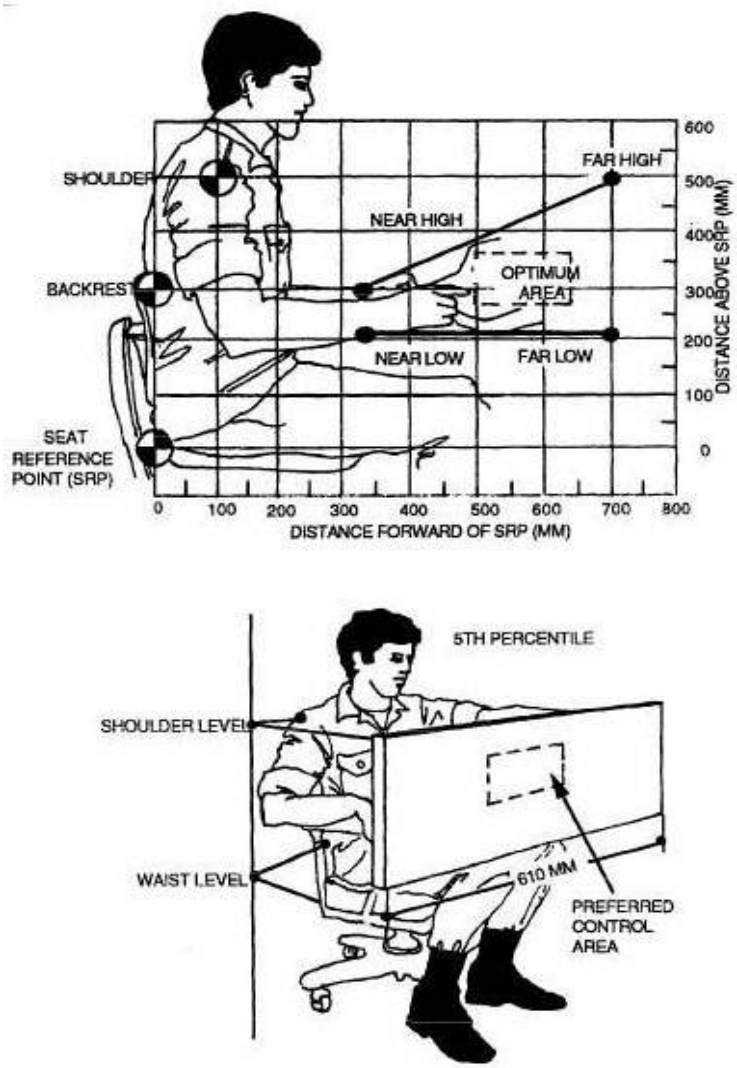

FIGURE 74. Seated optimum manual control space.

5.10.4 Special-purpose console design.

5.10.4.1 Horizontal wraparound. See figure 75 for an example.

5.10.4.1.1 Panel width. When requirements for preferred panel space for a single seated user exceed a panel width of 112 centimeters (44 inches), a flat-surface, segmented, wraparound console shall be provided to place all controls within reach. No less than 95 percent of female users shall be able to reach all controls while seated.

Downloaded from http://www.everyspec.com

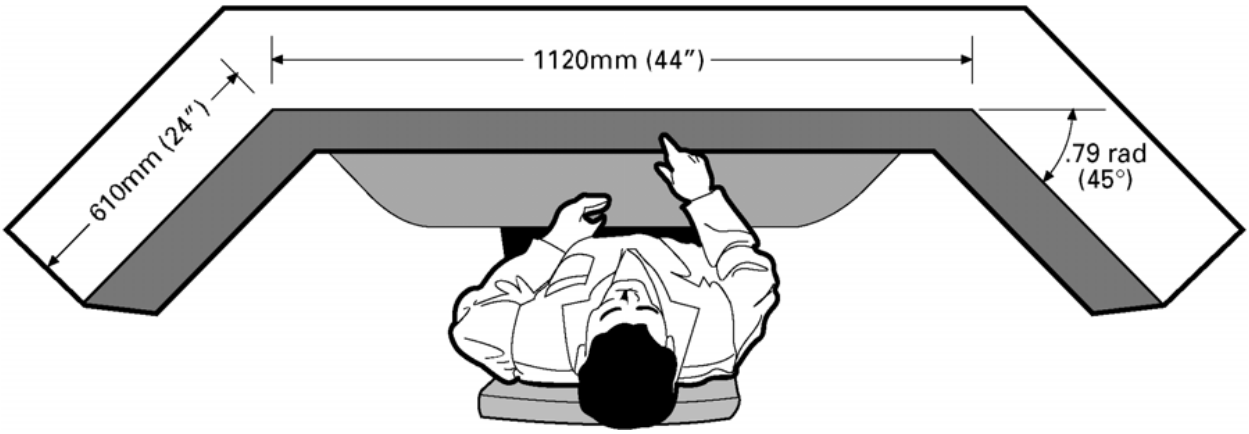

FIGURE 75. Wraparound seated console.

5.10.4.1.2 Panel angle. The left and right segments shall be angled from the frontal plane of the central segment such that they can be reached by at least 95 percent of female users without moving the torso.

5.10.4.1.3 Dimensions (vision over top). Where vision over the top is required (thereby limiting vertical panel space), the width of the central segment shall be not more than 112 centimeters (44 inches), and the width of the left and right segments shall not exceed 61 centimeters (24 inches).

5.10.4.1.4 Dimensions. Where vision over the top is not required, i.e., the console height may exceed the seat height by more than 69 centimeters (27 inches), the width of the central segment shall be not more than 86 centimeters (34 inches); the widths of the left and right segments shall be not more than 61 centimeters (24 inches). Where exclusive use by male personnel is specified (see 6.2), the console height may exceed the seat height by 75 centimeters (29.5 inches).

5.10.4.1.5 Viewing angle. The total required left-to-right viewing angle shall be not more than 190 degrees (see figure 75) and shall be reduced through appropriate control-display layout.

5.10.4.2 Vertical/stacked segments. See figure 76 for an example.

5.10.4.2.1 Panel division. Where direct forward vision over the top of the console is not required by a seated user, and when lateral space is limited, the panel shall be divided into three vertical/stacked segments. The surfaces of the panels shall be perpendicular to the user's line of sight with little or no head movement.

Downloaded from http://www.everyspec.com

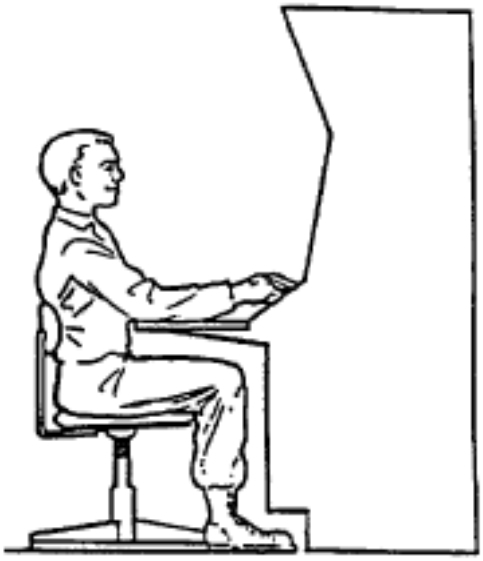

FIGURE 76. Example of vertical stacked segments.

5.10.4.2.2 Height. The center of the central segment shall be 80 centimeters (31.5 inches) above the seat reference point. The height of this segment shall be not more than 53 centimeters (2l inches).

5.10.4.2.3 Sit-stand consoles. Where personnel will work from both standing and seated positions at a single workstation, console dimensions shall in accordance with the dimensions on figure 64.

5.10.5 Illumination. See 5.2.1.4.

5.11 Physical environment design.

5.11.1 Stairs, ladders, ramps, platforms, catwalks, tunnels, and crawl spaces.

5.11.1.1 General criteria.

5.11.1.1.1 Selection. The selection of stairs, stair ladders, fixed ladders, or ramps for specific applications shall be based on the angle of ascent required and the criteria on figure 77.

Downloaded from http://www.everyspec.com

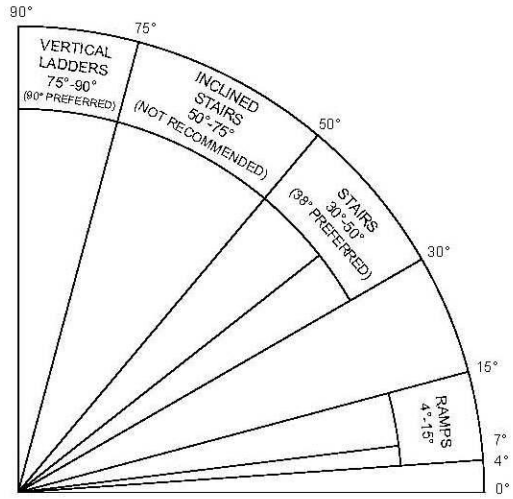

TYPE	ANGLE OF INCLINATION (IN DEGREES)	PREFERRED ANGLE OF INCLINATION (IN DEGREES)
VERTICAL LADDERS	75-90	90
INCLINED STAIRS	50-75	NOT RECOMMENDED
STAIRS	30-50	38
RAMPS FOR PERSONNEL	7-15	7-8
RAMPS FOR MATERIAL HANDLING	4-7	4

FIGURE 77. Type of structure in relation to angle of ascent.

5.11.1.1.2 Provision for hand-carrying equipment. Ramps, elevators, or equivalent means shall be provided when equipment must be hand carried. Ladders shall not be selected when equipment must be hand carried since both hands should be free to grasp the ladder. Stairs and steps shall not be used where hand-carrying bulky loads or loads in excess of 13 kilograms (29 pounds) is required.

5.11.1.1.3 Handrails and guardrails. Stairs, stair ladders, fixed ladders, and ramps shall be equipped with a handrail on each side. Where one or both sides are open, appropriate intermediate guardrails shall be provided to prevent personnel injury. Non-fixed vehicular-boarding ladders are neither stair ladders nor fixed ladders and are exempt from this requirement. Handrails and guardrails shall conform to the criteria of figure 78. Guardrails and handrails shall be used for the following purposes:

a. Keep personnel from falling off raised work places.

b. Keep personnel from falling through floor openings, hatchways, or manholes.

c. Keep personnel within safe bounds when passing through hazardous areas.

d. Help personnel climb inclines and stairs.

e. Help personnel stabilize themselves when working in moving vehicles or around high winds, fog, ice, or other hazards.

Downloaded from http://www.everyspec.com

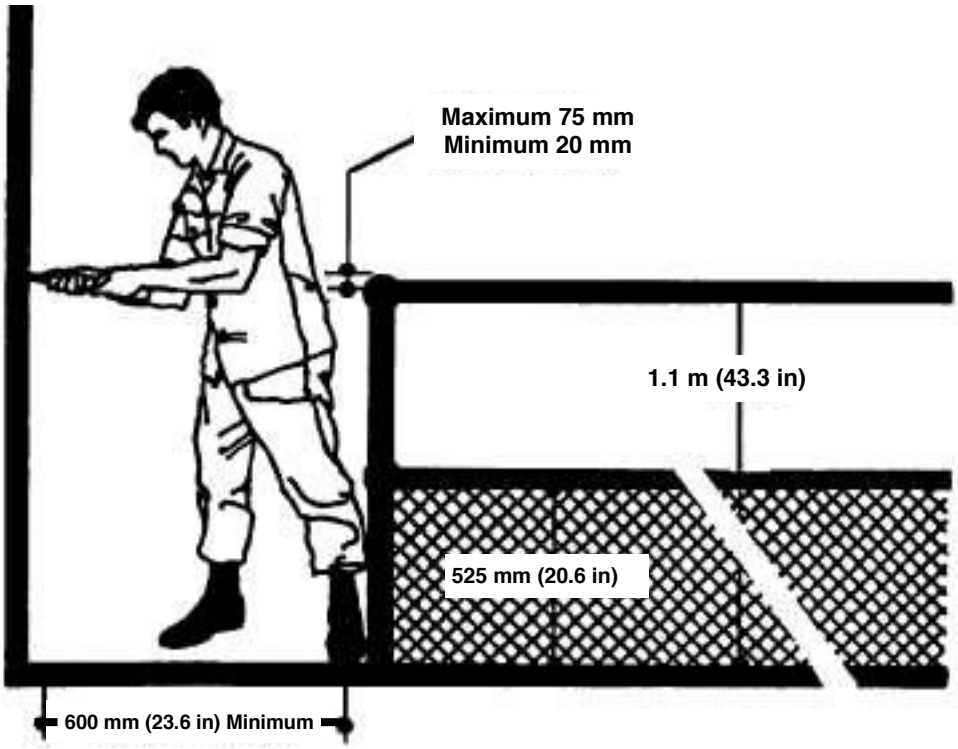

FIGURE 78. Guardrail and handrail dimensions.

5.11.1.2 Stairs. Stair dimensions shall be in accordance with the recommended values and shall be within the minimum and maximum limits of figure 79.

5.11.1.2.1 Stair treads. Where practical, stair treads shall be open, without the vertical risers to connect them. However, metal screens or kick plates shall be fastened to the underside where needed to prevent injuries or avoid damaging equipment.

Downloaded from http://www.everyspec.com

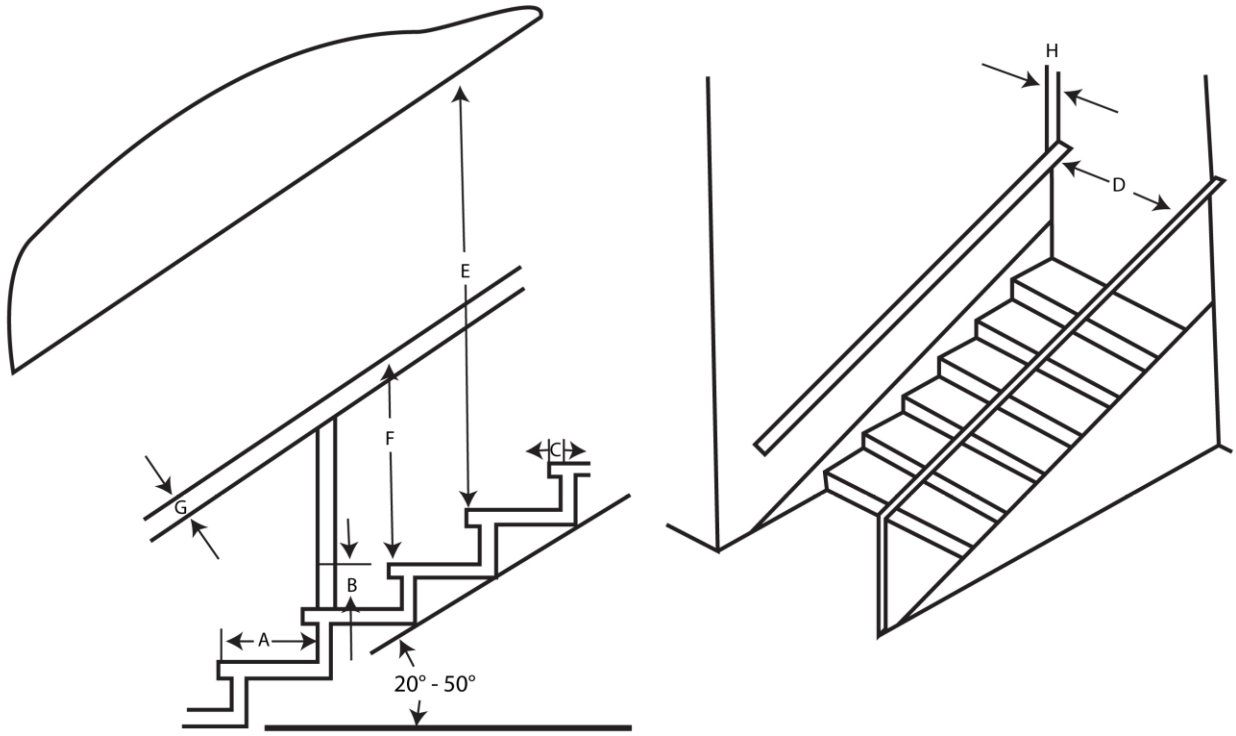

Dimension	Minimum	Maximum	Recommended
A. Tread depth (including nosing)	240 mm (9.5 in)	300 mm (12 in)	280 – 300 mm (11 – 12 in)
B. Riser height	125 mm (4.9 in)	200 mm (7.8 in)	165 – 180 mm (6.5 – 7.0 in)
C. Depth of nosing (where applicable)	19 mm (0.75 in)	38 mm (1.5 in)	25 mm (1.0 in)
D. Width (handrail to handrail):			
One-way stairs	760 mm (30 in)		910 mm (36 in)
Two-way stairs	1220 mm (48 in)		1300 mm (51 in)
E. Overhead clearance	1930 mm (76 in)		1980 mm (78 in)
F. Height of handrail (from leading edge of tread)	840 mm (33 in)	940 mm (37 in)	840 mm (33 in)
G. Handrail diameter	32 mm (1.125 in)	75 mm (3.0 in)	38 mm (1.5 in)
H. Rail clearance from wall	45 mm (1.75 in)		75 mm (3.0 in)

FIGURE 79. Stair dimensions.

5.11.1.2.2 Long flights. Long flights of stairs shall be avoided. There shall be at least one landing for each story (2.44 to 3.66 meters (8.0 to 12 feet) of elevation). Landings are recommended every 10 to 12 treads.

5.11.1.2.3 Landings. Landings shall provide at least 915 millimeters (36 inches) of clear landing space, and shall be the width of the stairway.

5.11.1.2.4 Risers. Riser height, or the distance between steps or stairs, shall be uniform (between 125 and 200 millimeters (4.9 to 7.8 inches)). The distance between steps and landings, if different from the uniform riser height, shall also be between 125 and 200 millimeters (4.9 to 7.8 inches).

Downloaded from http://www.everyspec.com

5.11.1.2.5 Load carrying. When people carry loads weighing more than 9 kilograms (19.8 pounds), or where stairs are more than two stories high, use deep treads (300 millimeters (11.8 inches)) and low risers (125 millimeters (4.9 inches)).

5.11.1.3 Ladders.

5.11.1.3.1 Stair-ladders. Stair-ladder dimensions shall be in accordance with the specified minimum and maximum limits of figure 80. The tread rise shall be open at the rear. Landings shall be provided every tenth to twelfth tread. The surface of treads on exterior stair-ladders shall be constructed of open grating material or shall be treated with nonskid material. Stair-ladders shall be of metal construction. Handrails shall have nonslip surfaces. If simultaneous two-way traffic is desired at a fixed location, separate up and down ladders shall be located side by side with double center handrails. Separation between the handrails shall be not less than 15 centimeters (6 inches), with 20 centimeters (8.0 inches) preferred.

Downloaded from http://www.everyspec.com

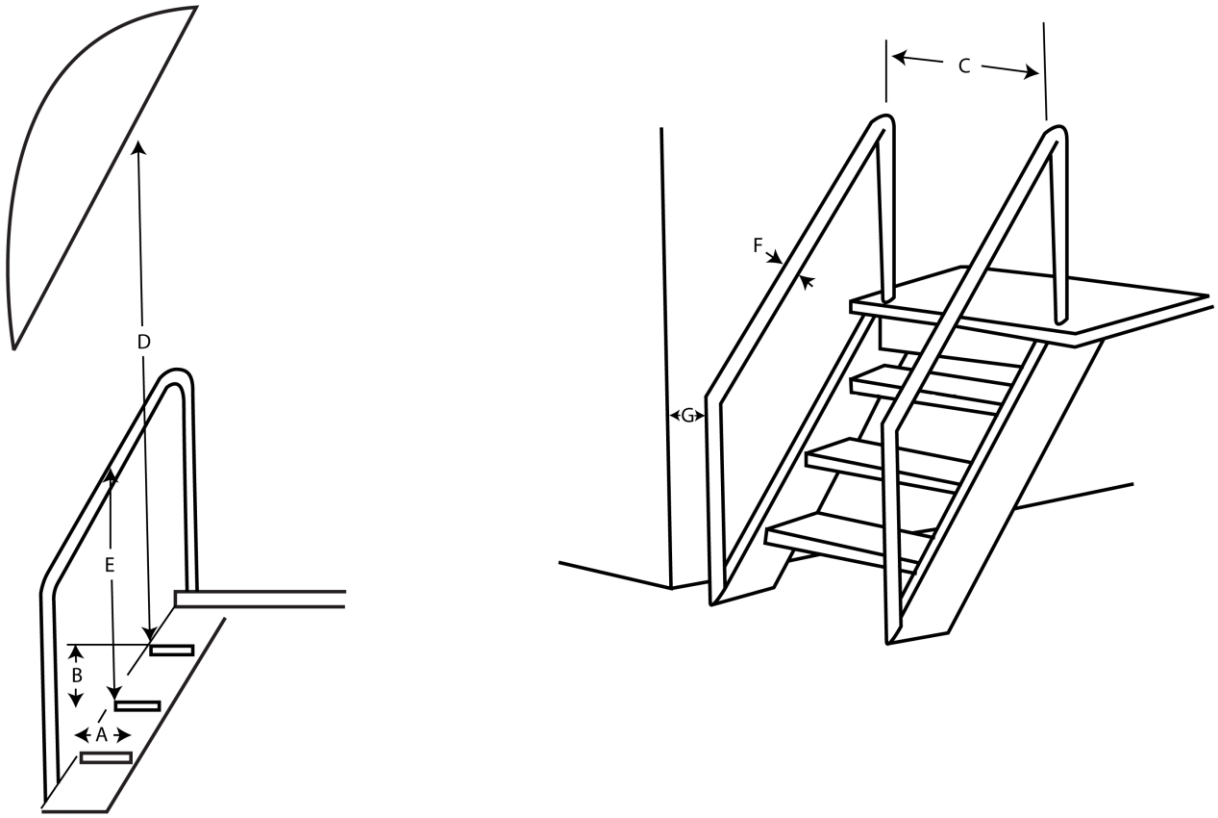

Dimension	Minimum	Maximum	Recommended
A. Tread depth range:			
For 50º rise	150 mm (6.0 in)	250 mm (10 in)	215 mm (8.5 in)
For 75º rise (open ladders only)	75 mm (3.0 in)	140 mm (5.5 in)	100 mm (4.0 in)
B. Riser height	180 mm (7.0 in)	300 mm (12 in)	230 mm (9.0 in)
C. Width (handrail to handrail)	530 mm (21 in)	610 mm (24 in)	560 mm (22 in)
D. Overhead clearance	1730 mm [1/] (68 in)		1930 mm (78 in)
E. Height of handrail (from leading edge of tread)	860 mm (34 in)	940 mm (37 in)	890 mm (35 in)
F. Handrail diameter	32 mm (1.125 in)	75 mm (3.0 in)	38 mm (1.5 in)
G. Rail clearance from wall	50 mm (2.0 in)		75 mm (3.0 in)

NOTE:

[1/] Whenever the distance D is less than 1880 mm (74 in), the overhead obstruction shall be painted with yellow and black stripes.

FIGURE 80. Stair-ladder dimensions.

5.11.1.3.2 Fixed ladders. Fixed ladder dimensions shall be in accordance with the specified minimum and maximum limits of figure 81. Fixed ladders that are used to provide access to multiple levels shall be offset at each successive level. Guardrails shall be provided around the opening at the top of each fixed ladder. All fixed ladders more than 6.0 meters (20 feet) high shall be equipped with, or include provision for, a safety device to provide positive protection from falls.

Downloaded from http://www.everyspec.com

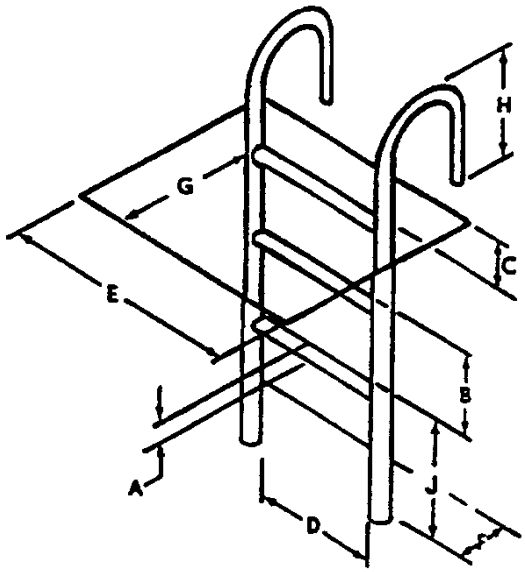

Dimension	Minimum	Maximum	Recommended
A. Rung thickness:			
Wood	32 mm (1.125 in)	38 mm (1.5 in)	35 mm (1.375 in)
Protected metal	19 mm (0.75 in)	38 mm (1.5 in)	35 mm (1.375 in)
Corrosive metal	25 mm (1.0 in)	38 mm (1.5 in)	35 mm (1.375 in)
B. Rung spacing	230 mm (9.0 in)	380 mm (15 in)	300 mm (12 in)
C. Height, rung to landing	150 mm (6.0 in)	380 mm (15 in)	380 mm (15 in)
D. Width between stringers	300 mm (12 in)		460 – 530 mm (18 – 21 in)
E. Climbing clearance width	610 mm (24 in)		760 mm (30 in)
Clearance depth			
F. In back of ladder	150 mm (6.0 in)		200 mm (8.0 in)
G. On climbing side (range)	Minimum of 910 mm (36 in) for 75 degrees to 760 mm (30 in) for 90 degrees		
H. Height of stringer above landing	840 mm (33 in)		910 mm (36 in)
J. Height from lower elevation to bottom rung		l80 mm (15 in)	

FIGURE 81. Fixed-ladder dimensions.

5.11.1.3.3 Rung ladders. Rung ladders are acceptable for occasional traffic, but they shall not be used for frequent passage. For rung ladder dimensions, see figure 82.

Downloaded from http://www.everyspec.com

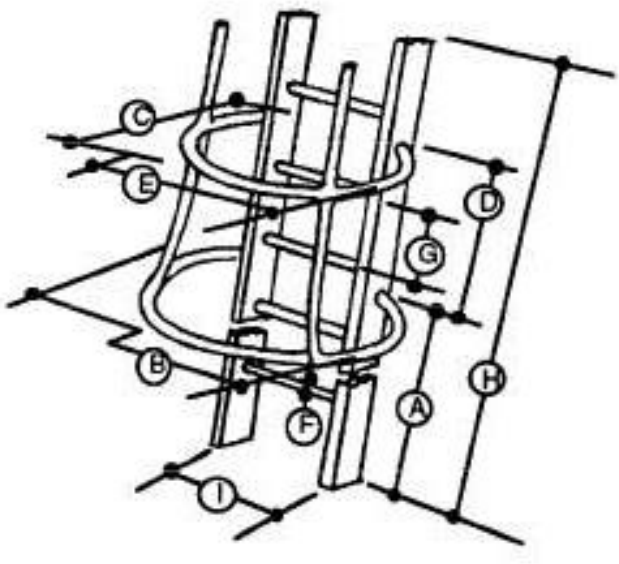

A.	Height of cage from base of ladder	2.1 m (6.8 ft)
B.	Flare at bottom of cage	810 mm (31.8 in)
C.	Depth of cage from center of ladder	710 mm (27.9 in)
D.	Maximum distance between cage ribs	460 mm (18.1 in)
E.	Width of cage	680 mm (26.7 in)
F.	Rung diameter	See figure 81
G.	Rung spacing	See figure 81
H.	Maximum ladder length	
	Single ladders	9.1 m (29.8 ft)
	Two-section metal ladders	14.6 m (47.9 ft)
	Two-section wood ladders	18.3 m (60 ft)
I.	Minimum width between siderails	
	Metal ladders	300 mm (11.8 in)
	Wood ladders up to 3.0 m long	290 mm (11.4 in)
	(Add 6.0 mm (0.23 in) for each additional 610 mm (24 in) in length.)	

FIGURE 82. Rung-ladder and ladder-cage dimensions.

5.11.1.3.4 Portable ladders. Portable ladders shall be avoided. When used at all, portable ladders shall be restricted to emergency functions, infrequent maintenance tasks, or tactical situations where fixed ladders are impractical.

5.11.1.4 Ramps.

5.11.1.4.1 Cleating. Where special environmental conditions require cleating of pedestrian ramps, the cleats shall be spaced 36 centimeters (14 inches) apart and extend from handrail to handrail at right angles to the line of traffic. When pedestrian traffic uses ramps, there also shall be traverse strips of non-skid material, at least 50 millimeters (1.96 inches) wide and 150 millimeters (5.9 inches) apart, over the entire length of the ramp.

Downloaded from http://www.everyspec.com

5.11.1.4.2 Mixed traffic. When a ramp is required for both pedestrian and vehicle traffic, the vehicle bearing surface shall be located in the center of the ramp, with the pedestrian surface next to the handrails. A vehicle ramp with an adjacent pedestrian stairway is preferred for this situation.

5.11.1.4.3 Ramp landings. Ramps shall have level landings at the top and bottom of each ramp and each ramp run. Landings shall have the following features:

a. The width of the landing be not less than the width of the ramp run leading to it.

b. The length of the landing be not less than 1.5 meters (60 inches).

c. Landings for ramps that change direction be not less than 1.5 meters by 1.5 meters (60 inches by 60 inches).

5.11.1.5 Personnel platforms and work areas.

5.11.1.5.1 Construction of exterior platforms and work areas. The surfaces of exterior personnel platforms and work areas shall be constructed of open metal grating.

5.11.1.5.2 Use of non-skid on exterior platforms and walkways. Where use of open grating is impractical, exterior personnel platforms and walkways shall be treated with non-skid material.

5.11.1.5.3 Guardrails on platforms and work areas. All open sides of personnel platforms shall be equipped with guardrails (with intermediate rails), with a top rail height not less than 107 centimeters (42 inches) and a toe board or guard screen height not less than 15 centimeters (6.0 inches).

5.11.1.5.4 Hand holds. Hand holds shall be furnished where needed.

5.11.1.5.5 Guardrail placement. The distance between the platform edge and the centerline of the railing shall be not more than 65 millimeters (2.5 inches).

5.11.1.6 Elevators, inclinators, and hydraulic-operated work platforms. Where these items are required, the following shall be provided:

a. Maximum load signs, located where they can be easily seen.

b. Guards, to prevent accidental operation of the lift.

c. Limit stops, to prevent injury to personnel and damage to equipment.

d. An automatic fail-safe brake or other self-locking device in case of lift mechanism failure.

e. Provision for manually lowering the platform or elevator when feasible.

f. Surface construction or treatment of open platforms, in accordance with 5.11.2.5.

5.11.1.7 Catwalks, tunnels, and crawl spaces. Catwalks, tunnels, and crawl spaces shall be designed to accommodate operations performed therein and personal clothing and equipment.

5.11.2 Passageways, ingress, and egress.

5.11.2.1 General.

5.11.2.1.1 Ingress and egress for work areas. Enclosed work areas shall have conventional entrances and exits for routine access to permit unrestricted flow for all anticipated traffic.

5.11.2.1.2 Prevention of inadvertent activation of controls near ingress and egress. Ingress and egress shall be located so personnel who are entering or leaving will not operate controls accidentally or block access to controls.

5.11.2.1.3 Auxiliary and emergency ingress and egress. Designers shall consider providing auxiliary entrances as well as any needed emergency exits.

5.11.2.1.4 Emergency exits. Emergency exits shall allow enough space for rapid exit of all occupants, including any who must carry essential equipment or wear bulky protective clothing, without danger of injuring personnel or damaging the equipment they carry.

Downloaded from http://www.everyspec.com

5.11.2.2 Walkways and passageways.

5.11.2.2.1 Design for anticipated traffic flow. Corridor widths shall be designed with consideration for peak traffic load expected, direction of traffic flow, and number and size of entrances and exits in the area.

5.11.2.2.2 Minimum passage widths. To allow people to move without restriction, the minimum widths given on figure 83 shall be observed.

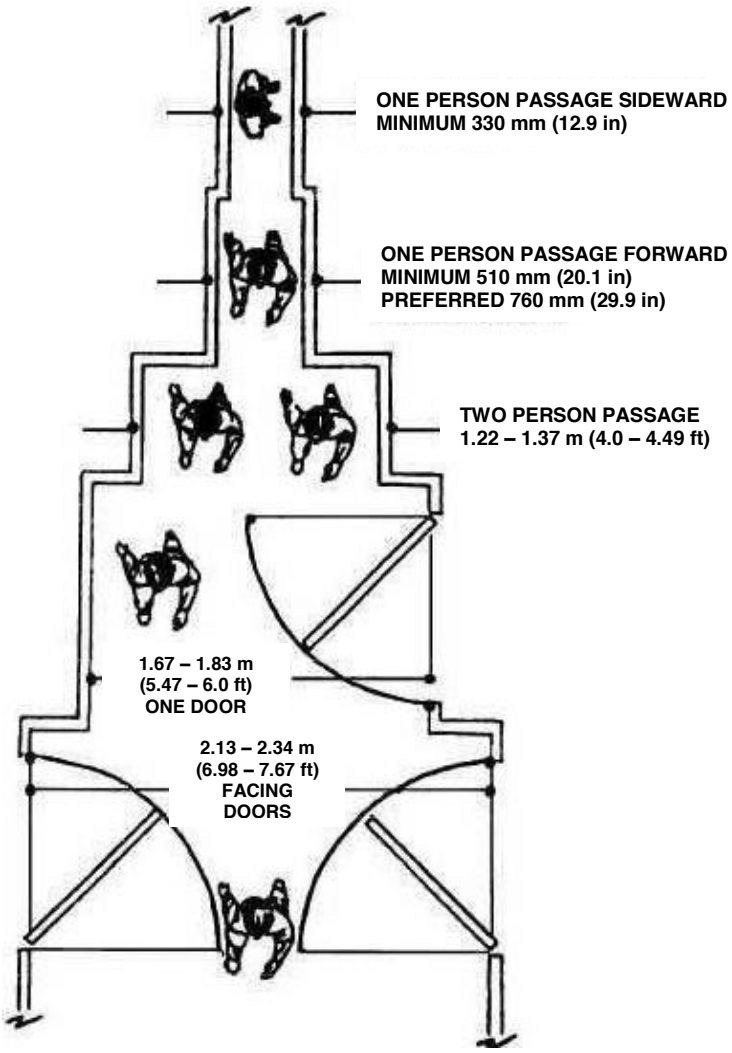

FIGURE 83. Walkway and passageway dimensions.

5.11.2.2.3 Affordance for additional passage width requirements. Adequate clearance for personnel wearing bulky protective clothing and carrying equipment shall be allowed.

5.11.2.3 Doors.

5.11.2.3.1 Restriction on sliding doors for egress from compartment. Sliding doors shall never be installed as the only personnel exit from a compartment.

5.11.2.3.2 Hinged door for egress from compartment. When a sliding door is used, a separate hinged door in the sliding door shall be provided for personnel use.

Downloaded from http://www.everyspec.com

5.11.2.3.3 Clearance. Fixed equipment shall be not less than 8.0 centimeters (3.0 inches) from the swept area of hinged doors. Where possible, a clearance of not less than 10 centimeters (4.0 inches) shall be provided between the door and wall.

5.11.2.3.4 Width. If it is necessary for two or more people to use a doorway simultaneously, the opening shall be not less than 1.4 meters (54 inches) wide and 2.0 meters (77 inches) high.

5.11.2.3.5 Opening direction. If normal traffic density and exiting personnel traffic in emergency conditions are expected to be low, hinged doors shall open inward rather than outward into a corridor. If exiting traffic volume is expected to be high, the door shall have a see-through window and shall open outward into a corridor to facilitate emergency exiting. Doors in room corners shall be hinged on the corner side.

5.11.2.3.6 Swinging doors. Swinging doors intended for two-way traffic shall be used in pairs, with the doors separated by a center door post and hinged at that center post. Swinging doors shall have openings or windows for visual access to oncoming traffic.

5.11.2.4 Hatches.

5.11.2.4.1 Configuration. Where permitted by structural considerations, the bottom edge of wall hatches shall be flush with the floor. Hatches shall open with a single motion of the hand or foot.

5.11.2.4.2 Force requirements. When a handle is used for unlocking a hatch, the unlocking force required shall be not more than 90 Newtons (20 pounds of force). Hatches placed in the overhead position shall require no more than 220 Newtons (50 pounds of force) force for opening and closing and be operable by suitably equipped and clothed users. The additional requirements for hatch handwheels listed in table IX shall be implemented.

5.11.2.4.3 Dimensions. Hatches shall accommodate suitably equipped and clothed user personnel in terms of limiting dimensions (see 5.8.4.1.3) for location and operability, and clearance dimensions (see 5.8.4.1.2) for size and passage factors.

5.11.2.5 Whole-body access.

5.11.2.5.1 Access opening requirements. Dimensions for rectangular access openings for body passage shall be not less than those dimensions shown on figure 84.

Downloaded from http://www.everyspec.com

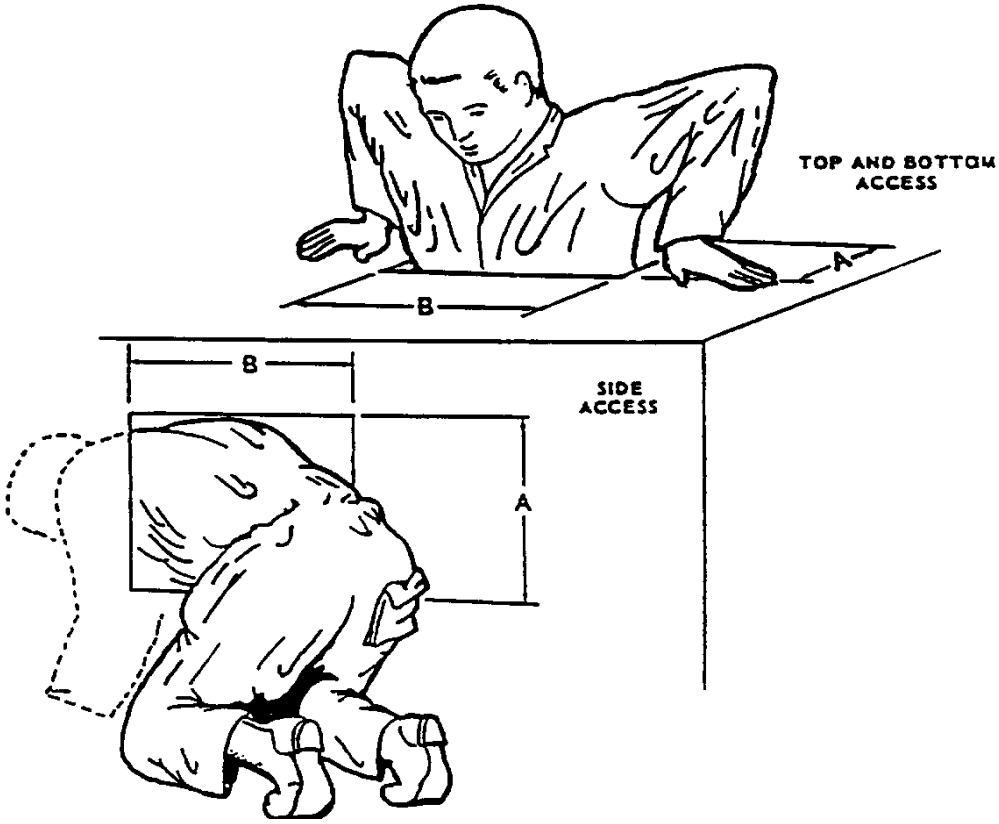

Dimensions	A. Depth		B. Width	
Clothing	**Light**	**Bulky**	**Light**	**Bulky**
Top and bottom access	330 mm (13 in)	410 mm (16 in)	580 mm (23 in)	690 mm (27 in)
Side access	660 mm (26 in)	740 mm (29 in)	760 mm (30 in)	860 mm (34 in)

NOTE:

1. Dimensions shown based on male data.

FIGURE 84. Whole-body access opening.

5.11.2.5.2 Minimum circular hatch dimensions. The diameter of any circular hatch shall be not less than 76 centimeters (30 inches).

5.11.2.5.3 Minimum oval hatch dimensions. Diameters of oval hatches in armored vehicles shall be not less than 43 and 71 centimeters (17 and 28 inches).

5.11.2.5.4 Affordance for additional access size. Where rescue of personnel may be required because of environmental hazards (e.g., toxic fumes) within the work place, larger access openings for two-person ingress and egress may be necessary.

5.11.2.5.5 Placement of foot rests or steps for top access. Where “step down” through a top access exceeds 69 centimeters (27 inches), appropriate foot rests or steps shall be provided.

Downloaded from http://www.everyspec.com

5.11.3 Surface colors.

5.11.3.1 Army. Surface colors shall use the guidance of MIL-HDBK-1473 unless specified by the procuring activity (see 6.2).

5.11.3.2 Navy. Surface colors shall be as specified by the procuring activity (see 6.2).

5.11.3.3 Air Force. Surface colors shall be selected from FED-STD-595 as follows:

a. Console, rack and cabinet exteriors: FED-STD-595/24300 Green

b. Panels: FED-STD-595/26492 Gray

c. Non-critical functional grouping pads: FED-STD-595/26622 Gray

d. Emergency/critical grouping pads: FED-STD-595/21136 Red

e. Interior walls and ceilings: FED-STD-595/27875 White

f. Interiors of uninhabited compartments where maintenance is performed: FED-STD-595/26622 Gray

g. Standard commercial equipment (if, however, such equipment becomes an integral part of an assembly, the color must be identical to or compatible with that of the assembly): Existing color

h. Anodized or conductive surface: Not painted

i. Lettering: background color/lettering color:

(1) FED-STD-595/24300 Green/FED-STD-595/17875 White

(2) FED-STD-595/26492 Gray/FED-STD-595/17038 Black

(3) FED-STD-595/27875 White/FED-STD-595/17038 Black

(4) FED-STD-595/26231 Gray/FED-STD-595/17875 White

(5) FED-STD-595/21136 Red/FED-STD-595/17875 White

j. Anodized or non-painted: FED-STD-595/17038 Black or FED-STD-595/17875 White, whichever provides better contrast

k. Commercial equipment: Contrasting color

5.12 Virtual environments, remotely handled systems, automated systems, telepresence, and teleoperations.

5.12.1 Virtual environments (VE).

5.12.1.1 Task performance. Virtual environment shall replicate natural environments to the degree that tasks can be performed at the same level that would occur in the natural environment.

5.12.1.2 Mental model. Information presented shall be consistent with the users' mental model.

5.12.1.3 VE workstation design.

5.12.1.3.1 Physical barriers. VE workstations shall have physical barriers that prevent persons working in a VE from wandering into hazards or becoming entangled in or unexpectedly constrained by cabling associated with the system.

5.12.1.3.2 Exclusion zone. An equipment-, personnel-, and obstruction-free exclusion zone not less than 1.0 meter (39 inches) beyond each edge of the interactive area shall be provided for all immersive VE applications.

5.12.1.4 VE (simulator) sickness.

5.12.1.4.1 Latency limits. Latency limits shall meet the following:

a. System. System transport delays between user input and system output (display or platform) shall not exceed 100 milliseconds (75 milliseconds, preferred) roundtrip (user input, system execution, and display of system execution).

b. Head-mounted displays. For displays with head-mounted imagery, the delay to respond to a head movement with an updated view shall not exceed 16 milliseconds.

Downloaded from http://www.everyspec.com

5.12.1.4.2 Frequency range. Motion frequencies between 0.1 Hertz and 0.5 Hertz shall be avoided. For head-mounted displays, the scene update rate shall be 60 Hertz or greater.

5.12.1.4.3 Terminal position. Simulations shall always end with the user and visual field positioned as they started.

5.12.2 Design of equipment for remote handling.

5.12.2.1 Characteristics of systems to be handled remotely.

5.12.2.1.1 Alignment. Self-alignment devices shall be provided for components that must be joined remotely.

5.12.2.1.2 Disconnect. Quick disconnect devices shall be provided for items that must be disconnected remotely.

5.12.2.1.3 Fasteners. Fasteners shall be captive and readily replaceable by remote handling techniques.

5.12.2.1.4 Lock and latching mechanisms. Each lock or latching mechanism shall be operable from a single point, have a positive catch, and provide a clear visual indication of the latch position.

5.12.2.1.5 Body-referenced interfaces latencies. The human interfaces to robotic systems employing body-referenced interfaces shall have latencies below 50 milliseconds.

5.12.2.2 Feedback. Feedback shall be provided from remote work areas to the user of the remote-handling system.

5.12.2.3 Warnings. Warning indicators shall be presented wherever the system health or operational parameters are approaching critical limits.

5.12.2.4 Manipulators.

5.12.2.4.1 Safety. Power manipulators shall be provided with positive stops to prevent accidents.

5.12.2.4.2 Characteristics. For tasks requiring manipulative dexterity and load capacities of less than 10 kilograms (22 pounds), manipulators with the following characteristics shall be provided:

a. Position control (i.e., zero-order control in which the user's control output directly determines the machine output).

b. Mutual force reflection between control and effector.

c. Seven degrees of freedom in motion and force control (i.e., three for translation, three for rotation, and one for gripping).

5.12.2.4.3 Power assist. For tasks involving gross positioning of loads equal to or heavier than 10 kilograms (22 pounds), electrically or hydraulically powered manipulators with rate control shall be provided (i.e., the user's control output shall directly determine the rate of change of the machine output).

5.12.2.5 Viewing equipment.

5.12.2.5.1 General. A viewing system shall be provided which gives the user of a remote manipulator adequate information with respect to the three spatial coordinates of the workspace (i.e., X, Y, and Z).

5.12.2.5.2 Direct viewing. When permitted by shielding requirements, provision shall be made for the user to view the work directly through shielding windows.

5.12.2.5.3 Viewing angle. In order to avoid distortion, requirements for direct viewing of objects near the viewing window or at line-of-sight angles greater than 60 degrees shall be avoided.

5.12.2.5.4 Indirect viewing. Indirect viewing systems (e.g., closed circuit television systems, periscopes, and microscopes) shall be provided to supplement direct viewing, where required by specific remote-handling situations.

Downloaded from http://www.everyspec.com

5.12.2.5.5 Lettering. Letters, numbers, and important details that must be viewed by television shall be light against a dark background.

5.12.2.5.6 Surfaces. Glazed or reflecting surfaces shall be avoided.

5.12.2.5.7 Stereo viewing. Stereo viewing designs shall meet the following:

a. Magnification. The two images produced by a stereoscopic periscope shall not differ more than 2.0 percent in magnification.

b. Imbalance. The two images shall be less than 1.0 milliradian in vertical and horizontal imbalance so as not to be fatiguing.

c. Light transmittance. Light transmittance of the two optical paths shall be within 10 percent of each other.

5.12.2.6 Illumination.

5.12.2.6.1 Reflected light. Unless otherwise specified by the procuring activity (see 6.2), reflected light from remote work areas, as measured at the user's work station (in direct viewing), shall be in accordance with the requirements of 5.5.3.4.

5.12.2.6.2 Threshold viewing. Monochromatic lighting shall be provided when viewing conditions are near threshold, when high magnification powers are required, or when the user is required to view the work at high angles of incidence through refractive materials.

5.12.3 Automated systems.

5.12.3.1 Design requirements.

5.12.3.1.1 Human support. Automated systems shall provide human support in terms of information processing, faster response time, and more accurate process control, keep user workload manageable, and increase mission capability and effectiveness.

a. Performance improvement. Functions shall be automated only if they improve system performance.

b. User in command. Automated systems shall prevent the removal of the user from the command role.

c. User support. Automation shall be used to support the user(s) where appropriate (human-centered automation), not implemented simply because the technology is available (technology-centered automation).

d. Task difficulty. An automated task shall be less difficult to perform than the manual task it replaces unless there is a documented system performance requirement that mandates the automation chosen.

e. User task. Tasks that are performed in an unpredictable environment requiring flexibility and adaptability shall be allocated to the user.

f. Clear roles and responsibilities. The automated system shall make it clear whether the user or computer is supposed to perform a particular task at a specific time.

g. Changing roles and responsibilities. The automated system shall provide a means for changing the allocation of roles and responsibilities among human and other system components.

h. Automation of high-risk actions or decisions. For system tasks associated with greater uncertainty and risk, automation shall not proceed beyond the level of suggesting a preferred decision/action alternative.

5.12.3.1.2 Relationship with user task. The relationships between display, control, decision aid, and information structure and user tasks and functions shall be clear to the user.

5.12.3.1.3 User involvement. Users shall be given an active role through relevant and meaningful tasks in the operation of a system regardless of the level of automation being employed.

5.12.3.1.4 Predictability. Automated systems shall behave predictably so that the user knows the purpose of the automation and how the operation will be affected by that automation.

Downloaded from http://www.everyspec.com

5.12.3.1.5 Recovery. Systems shall not be so reliant on automation or on human skills degraded by automation use that human users can no longer safely recover from emergencies or operate the system manually if the automation fails.

5.12.3.1.6 Consistency. The way that automation systems interact with their users shall reflect a high degree of consistency within and between systems.

5.12.3.1.7 Intuitive. Automated systems and associated integrated information displays shall be intuitive, easy to understand, and easy to learn and use.

5.12.3.1.8 Input and setup. Automated systems shall provide a way to check automation setup and to check information used as input for the automated system.

5.12.3.1.9 Functional analysis. Automated systems shall be provided when a functional analysis indicates that a machine can accomplish the mission or tasks better than a human.

5.12.3.1.10 Provision. Automated systems shall be provided when users cannot reliably, safely, or effectively perform assigned tasks or mission, and to keep the user workload at a manageable level.

5.12.3.1.11 Limitation. Automated systems shall be designed to avoid mission degradation, system damage, or injury to personnel.

5.12.3.1.12 Alerts. The user shall be provided unambiguous visual and auditory or haptic alerts when the system health or operational parameters are approaching critical limits.

5.12.3.1.13 Override capability. The user shall be provided the ability to override, shut down, or neutralize the automated system.

5.12.3.1.14 Spatial disorientation. The human interface shall minimize spatial disorientation resulting from differing spatial frames of reference between the automated system and the user.

5.12.3.1.15 Frames of reference. The human interfaces shall be designed to enable quick and accurate coordination of, or shifting between, multiple frames of reference.

5.12.3.1.16 Decision aiding. The user shall be provided sufficient information to effectively operate the system.

5.12.3.1.17 Information. The system shall provide the user information with the perspective of the machine viewpoint.

5.12.3.1.18 Continuous feedback. The system shall provide continuous feedback for systems control, status, and outputs.

5.12.3.1.19 Situational awareness. The system shall provide the user situational awareness regarding position, capability, and a projection of system status in a timely manner.

5.12.3.1.20 Planning. The system control station shall provide a means to program vehicle missions, pre-mission planning and verification, and post-mission data processing and display.

5.12.3.1.21 Return home. Automated user controlled systems shall be designed to provide an automatic, safe "return home" capability when communication is lost between the system and users for a time period specified by the procuring activity (see 6.2).

5.12.3.1.22 Neutralize capability. Automated user controlled systems shall be designed to provide a neutralize capability when communication is lost between the system and users for a time period specified by the procuring activity (see 6.2).

5.12.3.1.23 Transponder. Remote user controlled systems shall include an emergency transponder to provide location information when communication is lost between the user and the system.

5.12.3.1.24 Fault management. Fault management designs shall meet the following:

Downloaded from http://www.everyspec.com

a. Failure recovery. Automated systems shall allow for manual control and preservation of safe operations should the automation of one or more components of the system, on which the automation depends, fail.

b. Apparent failures. The system shall indicate automation failures to the user.

c. Early warning. Early warning notification of pending automation failure or performance decrements shall be presented to the user in sufficient time for the user to successfully adjust to the task.

d. Potential failure. The user shall be informed of automation performance decrements, potential failures, and malfunctions.

e. Automate diagnostic aids. Fault isolation, inspection, and checkout tasks shall be automated.

f. Automatic self-checking components. All essential electronic computer and peripheral components that are part of a system shall incorporate an automatic self-check diagnostic test of software and hardware, both at power up and at the request of the user, to ensure they are functioning properly.

g. Diagnostic information. The user shall be provided with sufficient information and controls to diagnose automated warning system operation.

5.12.3.1.25 Alarms and alerts. Alarms and alerts shall meet the following:

a. Specific alarms and alerts. Alarms and alerts shall have the following characteristics:

(1) Be specific to the event generating the alarm or alert.

(2) Be clearly indicated, not coded.

(3) Use visual text or easily identified icons describing the alarm or alert.

(4) Use a combination of audio and visual alarms or alerts for each event.

b. Multiple alarms and alerts. When multiple alarms or alerts occur it shall be made clear to the user that more than one alert or warning exists.

c. Alarm and alert priority. Multiple alarms and alerts shall be displayed in the order of their priority.

d. Mode awareness. There shall be a clear indication of what mode of operation the system is in (e.g., auto versus manual).

5.12.3.1.26 Specific controls and displays. Controls and displays shall be specifically designed for the roles/functions that need to be accomplished as opposed to generic controls/displays for multi-roles/functions.

5.12.3.1.27 Visualize consequences of decisions. The system shall provide information to the user to enable the user to visualize the consequences of a decision, whether made by the user or the automated system.

5.12.3.1.28 Command response. Automated system responses to user commands shall be brief and unambiguous.

5.12.3.1.29 User awareness. The automated system shall keep the user aware on a continuing basis of the function (or malfunction) of each automated system and the results of that function (or malfunction).

5.12.3.1.30 Interface. Interface designs shall meet the following:

a. Consistency. Human interfaces in automation programs and systems shall be consistent. The behavior of automated systems and interfaces shall be consistent with the expectations and understandings of users.

b. Logic. Automation interfaces shall reflect an obvious logic based on user task needs and capabilities.

c. Space. Interfaces and navigation aids shall provide information to enable the user to know where they are in the data space.

d. Representations. Spatial representations of information shall be used instead of verbal or textual displays in high workload situations.

e. Timeliness. Dynamic information (information that changes over time) shall be presented in real time and on demand to ensure accurate and timely decision making.

5.12.3.1.31 Modes. Mode designs shall meet the following:

Downloaded from http://www.everyspec.com

a. Identification. When control, display, or automation functions change in different modes of operation, the system shall provide the user a clear indication of the change and current mode, function identification, and status.

b. Accessibility. Frequently used modes shall be more accessible than infrequently used modes.

c. Number of modes. The number of different modes for a given system shall be minimized.

d. Switching. The user shall be able to easily switch between modes.

e. Consistent. Features and functions that are common between display modes shall be consistent.

f. Alerts. The automated system shall alert the user that a particular mode may be hazardous.

g. Inadvertent activation. The automated system shall prevent the inadvertent activation of a potentially unsafe mode.

5.12.3.1.32 Monitoring. The system shall be designed so that users are involved in active control and monitoring of the automated systems and the functionality of its hardware and software, including the display of status and trend information, as needed.

a. Changing data. Changing data that must be monitored by the users shall be displayed in a graphic format.

b. Limited time. The system shall not be designed to require users to perform purely monitoring tasks for longer than 20 minutes at a time.

c. Multiple displays. When users must monitor multiple displays, notification of important events shall occur in the same single, physical display in order to promote effective centralized monitoring performance. Important events shall occur in the same location within and across displays in order to promote effective monitoring performance.

d. Monitoring indication. Automated systems that are without incident for long periods of time shall provide some type of indication that the automation is still monitoring the system.

e. User interactions. Automated systems shall be able to monitor user interactions and to warn of user errors.

f. Manual control. Intermittent periods of manual control shall be used during extended periods of task automation to improve monitoring of the automation.

5.12.3.1.33 Information.

a. Incomplete data. The automated system shall provide a means to indicate to the user that data are incomplete, missing, unreliable, or invalid or that the system is relying on backup data. When the information is graphically displayed, color-coding shall be used to provide the user the status of the information.

b. Accurate status. Information presented to the user shall accurately reflect system and environment status in such manner that the user rapidly recognizes, easily understands, and easily projects system outcomes in relation to system and user goals.

c. Information presentation. Both the content of the information made available through automation and the ways in which it is presented shall be consistent with the task priorities.

d. Cueing important information. When information must be updated quickly, the most important information shall be cued to ensure it will be the first to be processed by the user.

e. Highlight changed data. Data changes that occur following automatic display update shall be temporarily highlighted.

f. Store and prioritize information. Long lists of information and tasks shall be stored and prioritized by the automated aid to minimize the number of decision alternatives and reduce the visual processing load of human users.

g. Information history. Provisions shall be made to display historical information to allow the user to display track change data.

5.12.3.1.34 Decision aiding.

a. When to use. Decision aids shall be used in the following situations:

(1) For managing system complexity.

(2) For assisting users in coping with information overload.

Downloaded from http://www.everyspec.com

(3) For focusing the user's attention.

(4) For assisting the user in accomplishing time-consuming activities more quickly.

(5) When limited data results in uncertainty.

(6) For overcoming human limitations that are associated with uncertainty, the emotional components of decision making, finite-memory capacity, and systematic and cognitive biases.

(7) For assisting the user in retrieving, retaining, representing or manipulating large amounts of information, combining multiple cues or criteria, allocating resources, managing detailed information, performing computations, and selecting and deciding among alternatives.

b. When to avoid. Decision aids shall not be used in the following situations:

(1) When solutions are obvious.

(2) When one alternative clearly dominates all other options.

(3) When there is insufficient time to act upon a decision.

(4) When the user is not authorized to make decisions.

(5) For cognitive tasks in which humans excel, including generalization and adapting to novel situations.

c. Determine decision aid use. Users shall be able to determine when and how the decision aid should be used.

d. Terms and criteria. Decision aids shall use terminology and criteria appropriate to the target user group.

e. Response options. Decision aids shall reduce the number of response options.

f. Assist user decisions. Decision aids shall assist, rather than replace, human decision makers by providing data for making judgments rather than commands that the user must execute.

g. Mental models. The support provided by decision aids shall be consistent with user cognitive strategies and expectations (mental models).

h. User tasks. Use of decision aids shall not require ongoing user tasks to be cancelled.

i. Minimize query of user. Decision aids shall minimize query of the users for information.

j. Minimize data entry. Decision aids shall minimize user data entry requirements.

k. Planning strategy. Decision aids shall be capable of planning a strategy to address a problem or guide a complex process.

l. Accept user direction. Decision aids shall accept direction from the users on which problem solving strategy to employ when alternative strategies are available.

m. Prioritize alternatives. When more than one alternative is available, the decision aid shall provide the alternatives in a recommended prioritization scheme based on mission and task analysis.

n. Decision aid limit. Decision aids shall alert the user when a problem or situation is beyond their capability.

o. Flexibility. Decision aids shall be flexible in the types and sequencing of user inputs accepted.

p. Estimate uncertainty. Decision aids shall estimate and indicate the certainty of analysis and provide the rationale for the estimate.

q. Derived data accessible. When information used by a decision aid is derived or processed, the data from which it is derived shall be either visible or accessible for verification.

r. Hard copy of decision. The user shall be able to obtain hardcopy printouts of data including screen displays, rules and facts, data employed, hypotheses tested, and summary information.

s. Procedural information. Decision aids shall give the user access to procedural information used by the aid.

t. Decision explanation detail. When the system provides explanations to the user, it shall supply a short explanation initially, with the ability to make available more detail at the user's request, including access to process information or an explanation for the rules, knowledge basis, and solutions used by the decision aid.

u. Clear explanations to user. When the system provides explanations to the user, the explanations shall use terms familiar to the user and maintain consistency with the immediate task.

Downloaded from http://www.everyspec.com

v. Repeated information. Decision aids shall avoid repeating information that is already available.

w. Alert to newly available information. Decision aids shall alert the user to changes in the status of important system information such as when critical information becomes available during decision aid utilization.

x. Patterns. Decision aids shall automatically notify the user of meaningful patterns or events such as when they predict a future problem.

y. Prediction. Decision aids shall be able to predict future data based on historical data and current conditions.

5.12.3.1.35 Control automation. Control automation shall meet the following:

a. User control. When automated control actions are performed, the automated tasks shall be easily understood by users and similar to user control actions.

b. Safety/degraded system. Control automation shall not be able to jeopardize safety or degrade system performance.

c. Range of control. An automated system shall provide the user with an appropriate range of control options that are flexible enough to accommodate the full range of operating conditions for which it was certified.

d. Feedback. To promote successful situation awareness of the automated system, the user shall be given immediate feedback to command and control orders.

e. Flexible. Control automation shall be flexible enough to allow for different user styles and responses without imposing new tasks on users or affecting automation performance.

f. Override. When a user might need to operate in out-of-tolerance conditions, a deliberate overriding action shall be provided.

5.12.3.1.36 Multiple systems. Multiple systems designs shall meet the following:

a. Controls and displays. Controls and displays shall be standardized across the different platforms the same users are expected to control, including users who may be reassigned to/from other platforms.

b. Mission terminology. Terminology shall be based on mission needs as opposed to engineering terms.

c. Standard terminology. Terminology shall be standardized across the different platforms that the same users are expected to control, including users who may be reassigned to/from other platforms.

5.12.3.2 Unmanned aerial vehicle (UAV).

5.12.3.2.1 Requirements. In addition to the requirements found in 5.12.3.1, the system shall meet the specific requirements outlined below.

5.12.3.2.2 Display. A centralized display shall be provided to each user to convey air vehicle system status and alerts.

5.12.3.2.3 Alerts. The user shall be provided the following system alerts to manage flight operations and emergency states:

a. Loss of communication link with the UAV.

b. When airspeed approaches air vehicle stall speed.

c. When onboard fuel approaches levels that require return to base or require landing immediately.

d. When the air vehicle has navigated all of its way points.

e. When the air vehicle approaches maximum or minimum altitude.

f. When the vehicle is on a collision path with other objects, as determined by vehicle speed, maneuverability, closure rate.

g. When the vehicle approaches the lethal range of a hostile air defense system, as determined by vehicle speed, maneuverability, closure rate.

5.12.3.2.4 Latency limits. The system transport delays between user input, system output, and display of system execution shall not exceed 100 milliseconds.

Downloaded from http://www.everyspec.com

5.12.3.2.5 Decision aiding. Decision aiding shall be provided to help the user with management of air vehicle and sensor operations.

a. Computations. The decision aiding shall perform the computational processing required to present courses of action to the user.

b. Operational phases. The decision aiding system shall augment all phases of operations including the following:

(1) Launch operations.

(2) Recovery operations.

(3) Route navigation.

(4) Transfer of air vehicle and sensor control between ground and manned airborne users.

(5) Target and weapons employment.

(6) Control of multiple vehicles.

5.12.3.2.6 Symbology. The UAV symbology shall be in accordance with MIL-STD-1787 and MIL-STD-2525.

5.12.3.2.7 Multiple platforms. Vehicles shall be designed to be launched and recovered from multiple platforms.

5.12.3.2.8 Monitoring systems. Monitoring systems shall include information regarding vehicle position, yaw, pitch, roll, heading, and distance.

5.12.3.2.9 Field serviceable. Deployable UAVs shall be field serviceable with limited special equipments.

5.12.3.2.10 Energy source. Energy sources for UAVs shall be designed to allow rapid turn around between tasks or missions.

5.12.3.3 Unmanned ground vehicle (UGV).

5.12.3.3.1 Requirements. In addition to the requirements found in 5.12.3.1, the system shall meet the specific requirements outlined below.

5.12.3.3.2 Display. A centralized display shall be provided to each user to convey vehicle system status and alerts.

5.12.3.3.3 Alerts. The user shall be provided the following system alerts to manage ground operations and emergency states:

a. Loss of communication link with the UGV.

b. When onboard fuel/power source approaches levels that require return to base.

c. When the ground vehicle has navigated all of its way points.

d. When the ground vehicle approaches its maximum range, as determined by vehicle speed, maneuverability, and closure rate.

e. When the vehicle is on a collision path with other ground objects, as determined by vehicle speed, maneuverability, and closure rate.

f. When the vehicle approaches the lethal range of a hostile defense system, as determined by vehicle speed, maneuverability, and closure rate.

5.12.3.3.4 Latency limits. The system transport delays between user input, system output, and display of system execution shall not exceed 250 milliseconds for vehicle motion control (left, right, forward, etc.). The system transport delays between user input, system output, and display of system execution shall not exceed 100 milliseconds for control of weapon systems.

5.12.3.3.5 Decision aiding. Decision aiding shall be provided to help the user with management of ground vehicle and sensor operations.

Downloaded from http://www.everyspec.com

a. Computations. The decision aiding shall perform the computational processing required to present courses of action to the user.

b. Operational phases. The decision aiding system shall augment all phases of operations including the following:

(1) Launch operations.

(2) Recovery operations.

(3) Route navigation.

(4) Transfer of ground vehicle and sensor control between users.

(5) Target and weapons employment.

(6) Control of multiple vehicles.

5.12.3.3.6 Symbology. The UGV symbology shall be in accordance with MIL-STD-2525.

5.12.3.4 Unmanned underwater vehicle (UUV).

5.12.3.4.1 Requirements. In addition to the requirements found in 5.12.3.1, the system shall meet the specific requirements outlined below.

5.12.3.4.2 Display. A centralized display shall be provided to each user to convey vehicle system status and alerts.

5.12.3.4.3 Alerts. The user shall be provided the following system alerts to manage underwater operations and emergency states:

a. Loss of communication link with the UUV.

b. When onboard fuel/power approaches levels that require return to base.

c. When the vehicle has navigated all of its way points.

d. When the vehicle approaches maximum or minimum depth.

e. When the vehicle approaches minimum distance from other underwater obstructions.

f. When the vehicle approaches its maximum range, as determined by vehicle speed, maneuverability, closure rate.

g. When the vehicle approaches the lethal range of a hostile underwater defense system, as determined by vehicle speed, maneuverability, closure rate.

5.12.3.4.4 Latency limits. Latency limits must incorporate good human engineering practice and state of the art methods until detailed specification data can be developed.

5.12.3.4.5 Decision aiding. Decision aiding shall be provided to help the user with management of vehicle and sensor operations.

a. Computations. The decision aiding shall perform the computational processing required to present courses of action to the user.

b. Operational phases. The decision aiding system shall augment all phases of operations including:

(1) Launch operations.

(2) Recovery operations.

(3) Route navigation.

(4) Transfer of vehicle and sensor control between users.

(5) Target and weapons employment.

(6) Control of multiple vehicles.

5.12.3.4.6 Symbology. The UUV symbology shall be in accordance with MIL-STD-2525.

Downloaded from http://www.everyspec.com

5.12.3.4.7 Multiple platforms. Vehicles shall be designed to be launched and recovered from multiple platforms.

5.12.3.4.8 Small craft. Small craft recovery UUVs shall be equipped with handles or hand holds for manual orientation and recovery.

5.12.3.4.9 Manual handling. UUV sensors, propulsers, and control surfaces shall be designed to allow manual handling.

5.12.3.4.10 Monitoring systems. Monitoring systems shall include information regarding vehicle position, yaw, pitch, roll, heading, distance, inclination angle, depth, and speed.

5.12.3.4.11 Field serviceable. Deployable UUVs shall be field serviceable with limited special equipment and no power or environmental requirements.

5.12.3.4.12 Energy source. Energy sources for UUVs shall be designed to allow rapid turn around between tasks or missions.

5.12.3.5 Unmanned surface vehicle (USV).

5.12.3.5.1 Requirements. In addition to the requirements found in 5.12.3.1, the system shall meet the specific requirements outlined below. (Note: USV is the designation for vehicles on the surface of the water.)

5.12.3.5.2 Display. A centralized display shall be provided to each user to convey surface vehicle system status and alerts.

5.12.3.5.3 Alerts. The user shall be provided the following system alerts to manage surface operations and emergency states:

a. Loss of communication link with the USV.

b. When onboard fuel/power approaches levels that require return to base.

c. When the vehicle has navigated all of its way points.

d. When the vehicle approaches minimum distance from obstructions, as determined by vehicle speed, maneuverability, closure rate.

e. When the vehicle approaches its maximum range.

f. When the vehicle approaches the lethal range of a hostile water defense system, as determined by vehicle speed, maneuverability, closure rate.

5.12.3.5.4 Latency limits. Latency limits must incorporate good human engineering practice and state of the art methods until detailed specification data can be developed.

5.12.3.5.5 Decision aiding. Decision aiding shall be provided to help the user with management of vehicle and sensor operations.

a. Computations. The decision aiding shall perform the computational processing required to present courses of action to the user.

b. Operational phases. The decision aiding system shall augment all phases of operations, including the following:

(1) Launch operations.

(2) Recovery operations.

(3) Route navigation.

(4) Transfer of vehicle and sensor control between users.

(5) Target and weapons employment.

(6) Control of multiple vehicles.

5.12.3.5.6 Symbology. The USV symbology shall be in accordance with MIL-STD-2525.

Downloaded from http://www.everyspec.com

5.12.3.5.7 Multiple platforms. Launch and recovery vehicles shall be designed to be launched from multiple platforms.

5.12.3.5.8 Small craft. Small craft recovery USVs shall be equipped with handles or hand holds for manual orientation and recovery.

5.12.3.5.9 Manual handling. USV sensors, propulsers, and control surfaces shall be designed to allow manual handling.

5.12.3.5.10 Monitoring systems. Monitoring systems shall include information regarding vehicle position, yaw, pitch, roll, heading, distance, and speed.

5.12.3.5.11 Field serviceable. Deployable USVs shall be field serviceable with limited special equipment and no power or environmental requirements.

5.12.3.5.12 Energy source. Energy sources for USVs shall be designed to allow rapid turn around between tasks or missions.

5.12.4 Telepresence. The system shall provide the user with a sense they are part of the system being controlled. The system shall provide feedback for all controls and displays in a timely manner consistent with table V. The system shall provide clear, concise feedback that is intuitive to the user.

5.12.5 Teleoperations. Teleoperation of controls shall provide multiple feedback loops to the user so that force, reach, and situation awareness are clearly apparent to the user for every control action. For remote surveillance systems, the display shall update no later than 200 milliseconds from user command.

5.13 Small systems, equipment, and weapons.

5.13.1 Gunner tracking performance.

5.13.1.1 Gunner environment. Where applicable, obscuration, shock, and vibration shall be sufficiently minimized to permit resumption of tracking rapidly after firing.

5.13.1.2 Crank size. The size of tracking cranks, where used, shall be a function of rotation speed required.

5.13.1.3 Crank speed.

5.13.1.3.1 Crank speed versus radius. Crank speed shall be from 140 to 200 revolutions per minute (rpm) of the crank for radii between 55 to 115 millimeters (2.2 to 4.5 inches).

5.13.1.3.2 Smaller radii. Smaller crank radii shall be used for high rpm requirements and the converse.

5.13.1.4 Two-dimensional tracking. A single control, rather than separate controls for each dimension, shall be used for two-dimensional tracking.

5.13.1.5 Supports. Where a joystick is used for tracking, a hand, wrist, or forearm support shall be provided.

5.13.1.6 Compatibility. Movement of the tracking control shall be compatible with expected or conventional control movements.

5.13.2 Optical instruments and related equipment. This section pertains only to direct-view, visual optical systems.

5.13.2.1 Visual accommodation. Any adjustment of the eyes beyond normal functional ability shall not be required.

5.13.2.2 Viewing angle. Optical instruments shall be oriented so that they are presented to the user at a comfortable viewing angle.

5.13.2.3 Magnification.

Downloaded from http://www.everyspec.com

5.13.2.3.1 General. Instrument magnification shall be sufficiently high to permit performance of the required application (e.g., detection, recognition, identification, weapon laying).

5.13.2.3.2 Unstabilized, unsupported, handheld sights. Because of hand tremors and body motion, magnification of unstabilized, unsupported, handheld rifle and pistol sights shall be not more than 4 power; magnification of unstabilized, unsupported, handheld monoculars or binoculars shall be not more than 8 power.

5.13.2.3.3 Multiple magnification requirements. If more than one magnification is required, two or more discrete magnifications shall be provided. Varifocal (zoom) systems shall be considered for use only in systems where sighting accuracy is relatively unimportant and results in overall simplification.

5.13.2.4 Entrance pupil. The entrance pupil shall be equal to the product of the magnification and the exit pupil diameter.

5.13.2.5 Exit pupil.

5.13.2.5.1 General. The diameter of the exit pupil shall be consistent with intended use and size/weight limitations.

5.13.2.5.2 Daylight. For daylight application, the exit pupil diameter shall not be less than 3.0 millimeters (0.12 inches).

5.13.2.5.3 Low light levels. For maximizing performance at twilight and lower light levels, the exit pupil shall be not less than 7.0 millimeters (0.28 inches).

5.13.2.6 Eye relief.

5.13.2.6.1 Long eye relief. A long eye relief (e.g., 25 millimeters (1.0 inch)) shall be provided for vehicular mounted sights if the observer must be protected from gun recoil, observe on the move, or maintain some field-of-view while wearing a protective mask.

5.13.2.6.2 Wearing of glasses. To permit use by observers wearing glasses when recoil is not encountered, eye relief shall be not less than 15 millimeters (0.6 inch).

5.13.2.7 Eyepiece adjustments.

5.13.2.7.1 4-power and less. Fixed focus eyepieces set between -0.50 and -1.00 diopter may be used for instruments 4-power and less.

5.13.2.7.2 Over 4-power. Eyepiece dioptric (focusing) adjustments (-4.0 to +2.0 diopters required, -6.0 to +2.0 diopters desired) shall be provided and marked in 0.5 diopter increments on all instruments over 4-power magnification.

5.13.2.8 Optical quality.

5.13.2.8.1 Axial resolution. Axial resolution shall be equal to or better than 300 microradians (1.0 minute) divided by the magnification to provide an eye-limited instrument.

5.13.2.8.2 Luminous transmission. Luminous transmission shall be as high as possible, preferably greater than 50 percent.

5.13.2.9 Non-illuminated sights and reticles.

5.13.2.9.1 Line thickness. Reticle lines shall be thin enough so as not to obscure targets, but thick enough to be easily seen. Reticle lines shall subtend not less than 600 microradians (2.0 minutes) at the eye.

5.13.2.9.2 Patterns. Reticle patterns shall be as simple as possible and restricted to one main mission (e.g., major weapon ballistic scales) per reticle glass. Additional patterns shall be on separate reticle glasses if added complexity is warranted for the particular application.

Downloaded from http://www.everyspec.com

5.13.2.9.3 Format. Line reticles shall be used in preference to reticles containing one, two, or three central spots. A small cross or very small circle shall be used in preference to a dot.

5.13.2.9.4 Parallax. The reticle shall be focused to the target range of primary interest to limit the parallax to an acceptable value throughout the usable range.

5.13.2.10 Illuminated sights and reticles.

5.13.2.10.1 Night operations. Illuminated reticles shall be provided for sights to be used during twilight or night operations.

5.13.2.10.2 Color. Blue shall not be used as the color of illumination for reticles or sights.

5.13.2.10.3 Dimming. Sight luminance shall be continuously adjustable until it is extinguished.

5.13.2.10.4 Uniformity. Sights shall be evenly illuminated.

5.13.2.10.5 Reticle lines. The thickness of reticle lines for illuminated sights shall not be less than 150 microradians (0.5 minutes) visual angle. Reticle lines shall be thin enough so as not to obscure targets, but thick enough to be easily seen. The thickness of reticle lines shall not exceed 600 microradians (2.0 minutes).

5.13.2.10.6 Night vision device (NVD) accommodation. If potential operational conditions include NVD use, the spectral output of all light emitting from or illuminating a display shall be in accordance with MIL-STD-3009.

5.13.2.11 Binoculars/bioculars.

5.13.2.11.1 Biocular viewing. Where continuous use of a sight under low levels of illumination will exceed one minute, a single optical train shall be provided with two eyepieces if this does not lead to unacceptable light losses.

5.13.2.11.2 Eyepiece separation. Binocular/biocular instruments shall have an eyepiece separation scaled from 50 to 75 millimeters (2.0 to 3.0 inches) with 1.0-millimeter (0.04-inch) interval markings.

5.13.2.11.3 Magnification differences. Magnification differences between the two barrels shall not exceed 2.0 percent.

5.13.2.11.4 Luminous transmission differences. Luminous transmission differences between the two barrels shall not exceed 5.0 percent.

5.13.2.11.5 Matched oculars. To avoid size differences in the images presented to the two eyes (that may induce eyestrain or headache), oculars shall be matched in focal length, i.e., shall be matched pairs.

5.13.2.11.6 Weight. The weight of handheld binoculars/bioculars shall be not greater than 1.5 kilograms (3.3 pounds) (required) and should be not greater than 1.0 kilogram (2.2 pounds) (preferred).

5.13.2.12 Eyecups and headrests. Any optical instrument requiring steady orientation of the eyes shall be provided with a headrest or eyecups, or both.

5.13.2.12.1 Eyecups. Eyecups shall be provided to maintain proper eye relief, eliminate stray light, and when required, protect or cushion the eyes and orbital region against impact with the eyepieces. The radii of figure 85 define a surface of revolution within which a satisfactory symmetrical eyepiece and cup should be designed if interferences with facial features are to be avoided. Eyecups shall be applied to cushion forms when they are compressed to the maximum.

Downloaded from http://www.everyspec.com

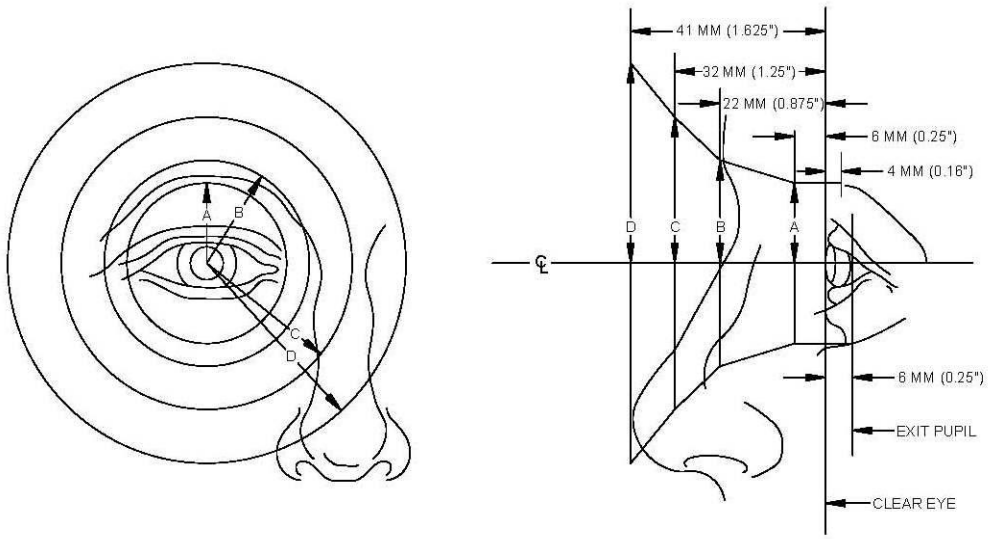

FIGURE 85. Anatomical limits on axially symmetrical ocular metal parts.

5.13.2.12.2 Headrests/brow pads. A headrest or brow pad shall be used to absorb energy which would be injurious to the user's head.

5.13.2.12.3 Compatibility with clothing and personal equipment. Eyecups and headrests shall be compatible with helmets, protective masks, and other clothing and personal equipment.

5.13.2.13 Accessories.

5.13.2.13.1 Filters. Light filters, removable from the optical path, shall be provided to reduce glare or light intensity, or protect the observer's eyes against hazardous light levels. Filters or surface coatings in an optical path have cumulative effects on prism, clarity, perceived color, color contrast, light transmittance, and luminous contrast and should be evaluated in all operational combinations while viewing performance-relevant visual information. Provision shall be made for filter stowage.

5.13.2.13.2 Shutters. Shutters having closure and reopening times appropriate for each application may be provided in lieu of fixed filters to protect the observer exposed to flashes from weapon systems, lasers, or other bright light sources. Shutters for protection from the observer's own weapon system flash, which may be actuated just before the weapon is fired, shall not disturb the lay of the weapon before closing, nor unnecessarily impede the observation of the projectile flight path or resultant impact.

5.13.2.13.3 Positioning aids. Level vials, scales, pointers, and other devices required for positioning the instrument shall be readily visible and protected from damage or displacement.

5.13.2.14 Compatibility with clothing and equipment. Instruments shall be compatible with the special clothing, headgear, protective masks, or other ancillary equipment required by the user that may affect controls, eyepieces, eyecups, headrests, and other user interfaces.

5.13.2.15 Lighting. Means shall be provided for illumination of internal and external scales, level vials, and other instruments that must be read under low light level conditions.

5.13.2.15.1 Continuously variable control. Continuously variable control of illumination shall be provided as required by weapon system characteristics.

Downloaded from http://www.everyspec.com

5.13.2.15.2 Low-level conditions. Illumination to be used under low light level conditions shall minimally affect the dark adaptation of the observer.

5.13.2.15.3 Dark adaptation. Where dark adaptation must be maintained, low-level white lighting, with the capability to dim to zero, shall be used in preference to low-level red lighting.

5.13.2.15.4 Night vision device (NVD) compatibility. Where compatibility with NVDs is required, the spectral output of all light emitting from or illuminating a display shall be in accordance with MIL-STD-3009. The lighting shall be continuously variable to the full OFF position.

5.13.2.16 Maintenance.

5.13.2.16.1 Modular design. When practical, optical equipment shall be configured as modules to provide for interchangeability of optical subassemblies.

5.13.2.16.2 Positioning aids. Built-in aligning devices and other aids shall be used wherever possible for ease of positioning optical assemblies within an instrument or optical modules that have multiple applications.

5.13.2.16.3 Quick release. Quick-release methods of removing optical instruments shall be used.

5.13.2.16.4 Collimation. Optical instruments shall be provided with built-in collimation features to allow field adjustment.

5.13.2.16.5 Purging and charging. Where periodic purging and charging of optical instruments are required, an instruction plate, which indicates time interval and pressure requirements, shall be provided on the instrument. Purging and charging fittings shall be accessible for required maintenance.

5.13.2.16.6 Component replacement. Internal components (e.g., light bulbs, batteries) that require frequent replacement, checkout, or maintenance shall be easily accessible, removable without special tools, and replaceable without removal or disassembly of other components. Tools and equipment shall be readily accessible for those components that require frequent replacement. Provision shall be made for storage of spare components and tools in or on the specific equipment.

5.13.2.16.7 Boresighting. Boresight knobs shall be provided with a positive lock. The boresighting settings shall not change during the locking process. Boresight knob locks shall require not greater than 45 Newtons (10 pounds of force) of force to lock and unlock. Boresight adjustment knobs shall be capable of being locked, unlocked, and adjusted by the hands of the 5th and 95th percentile of suitable-clothed and equipped users.

5.13.3 Weapons systems.

5.13.3.1 Ammunition.

5.13.3.1.1 Projectile storage. The term “projectile” in this section is intended to mean a complete round. The ready rack shall be designed so that several different types of ammunition can be stowed and removed without shifting other rounds and to minimize interference with the work area. Means shall be provided to prevent stowed projectiles from dropping or impacting each other when the vehicle is moving or when the gun is fired. The design shall provide for easy stowage and removal of ammunition by hoist or manual means.

5.13.3.1.2 Handling. Particular attention shall be devoted to stowing ammunition when manual handling is required so that the gun may be loaded safely, rapidly, and effectively. Projectiles shall be stowed with their noses pointing away from the breech so that both loader and projectile are oriented correctly when positioning the rounds in the ramming trough.

5.13.3.1.3 Projectile transfer. Unobstructed workspace shall be provided for transferring the projectiles from outside the vehicle to the ready rack and from the ready rack to the breech. Provisions shall be made for disposing of empty shell cases in vehicles using fixed and semi-fixed ammunition.

Downloaded from http://www.everyspec.com

5.13.3.1.4 Ammunition hoist. Where an ammunition hoist is used, the projectiles shall be prevented from swinging about, thereby endangering personnel or damaging equipment. The ammunition hoist design shall include a clamp to prevent accidental release of projectiles, provisions for manual operation of the hoist in case of power failure, and the capability of being stowed without interference with either the ramming trough or breech lock mechanism.

5.13.3.1.5 Ammunition stowage racks. Ammunition stowage racks, whether loaded or empty, shall not impede escape from the crew compartment, obstruct access to controls, obscure displays, or interfere with the footing of crewmembers; and they shall be located so personnel can remove and replace ammunition from the stowage rack without striking any protrusions.

a. Ready racks. Where ready racks are located to the rear of the gun breech, sufficient distance shall be provided between the rack and the breech to accommodate the longest round anticipated for use plus the thickness of the 95th percentile gloved hand, and an additional 50 millimeters (2.0 inches) channel.

b. Floor and hull. Floor and hull stowage tube-type ammunition racks shall be spring loaded so that stowed rounds will travel 50 millimeters (2.0 inches) out of the rack when the latching mechanism is released. Where spring loading is not feasible, the end of the tube shall be recessed to facilitate gripping by hand.

c. Upright mounts. Upright-mounted ammunition weighing over 18.1 kilograms (40 pounds) shall have a floor retainer which has sufficient clearance to allow removal by the 95th percentile male gloved hand.

d. Latching mechanisms. Ammunition rack latching mechanisms shall be of a quick release design which requires no more than 53 Newtons (12 pounds of force) of force to operate, and be free of sharp edges or protrusions which can snag clothing or injure personnel during entrance, exit, and movement within the vehicle.

(1) Remain in open position. Latching mechanisms shall remain in the open position or fold out of the way by gravity when unlatched to allow the removal and replacement of ammunition in stowage racks.

(2) Position apparent. It shall be apparent to personnel when the ammunition rack latching mechanisms are in the locked position but not secured.

(3) Cushioning material. Latching mechanisms shall have a cushioning material to minimize transmission of undesired dynamic effects to secured rounds.

(4) Damage prevention. The latching mechanism shall not allow distortion, bursting, or rupturing of the round or cartridge case and shall prevent damage to the internal components of the missile or rounds.

5.13.3.1.6 Fuzes. Fuzes shall be in accordance with the below requirements.

a. Surface material. The surface of hand-manipulated fuze controls shall be a material which will maximize the grip the user can maintain on the fuze.

b. Surface texture. The texture of the surface finish shall not interfere with the aerodynamic performance of the round.

c. Detents. Fixed detents shall be used for each position on a fuze so that the moving component of the control will snap into place in the selection of each fuze. Sufficient resistance shall be built into the setting to prevent the inadvertent change of settings.

d. Pointers. Markings and pointers shall contrast maximally with their backgrounds and shall correspond in color. The pointer tip and index shall not be separated by more than 1.5 millimeters (0.06 inch).

e. Multi-position selectors. Multi-position selectors shall be designed to resist changes of user settings which may result from the rotational force imparted by the round either during firing or while in flight. The selector mechanism shall be designed such that linear acceleration will lock the selector in place and prevent such accidental changes in setting.

5.13.3.2 Armament.

5.13.3.2.1 Primary armament. Primary armament shall be in accordance with the below requirements.

a. Procedures reversible. Main armament loading procedures shall be reversible for efficient and safe round removal.

Downloaded from http://www.everyspec.com

b. Minimize vibration. Provision shall be made to minimize vibrations of the gunner's sight from the shock of loading main armament.

c. Breech design. A breech weighing over 22.5 kilograms (50 pounds) shall not be considered manually removable.

(1) Manual breech operation. For manual breech operation, the operating force shall not exceed 130 Newtons (29 pounds of force) of force for one-handed operation and 220 Newtons (50 pounds of force) of force for two-handed operations.

(2) Controls for power operated breeches. The controls for power operated breeches shall be located away from the breech to protect personnel when the breech is in operation.

(3) Stored mechanical energy. Stored mechanical energy in the breech block which, if released, could injure personnel, shall be protected by interlock from accidental actuation.

(4) Prevention of system damage and injury to personnel. The main armament recoil mechanism shall be capable of being exercised by crew personnel without damage to the system or danger of injury to personnel.

d. Maintenance. Main armament machined surfaces shall be protected from the environment to minimize maintenance requirements.

(1) Special tools. Crew maintenance of the main armament shall not require special tools.

(2) Cleaning. The main armament chamber shall be capable of being cleaned by the central 90 percent of suitably clothed and equipped personnel.

(3) Servicing machine surfaces. Servicing polished machine surfaces shall not require removing the gun tube.

(4) Drains. The breech design shall provide drains where necessary to preclude trapping cleaning fluids.

e. Expended rounds. Casing ejection shall not endanger personnel or equipment. Space shall be provided to store expended casings within the fighting compartment or a means shall be incorporated into the design to allow disposal of these casings by another method.

f. Boresighting. Boresighting shall be capable of being accomplished by the naked eye and without use of tools from within the fighting compartment and without disassembly in order to achieve the specified convergence with the line of sight or to be parallel with the line of sight. Quadrants and other devices mounted on the main armament shall be accessible to the gunner throughout the full range of elevation and depression.

g. Electrical components. The electrical potential of power components shall be capable of being de-energized at the primary power source. Shielding shall be provided to prevent accidental contact with wires and electromagnetic pulse. A disconnect capability shall be provided at the powered component and power source.

5.13.3.2.2 Secondary armament. Secondary armament shall be in accordance with the requirements below.

a. Removal and replacement. The secondary weapon shall be capable of being mounted on the vehicle by crewmembers from a natural working position with the weapon fully assembled. The secondary weapon shall be capable of being removed or replaced without the use of tools. The number of turns required for installing or removing threaded fastening devices shall be minimized.

b. Retaining devices. All secondary armament retaining devices (pins or bolts) shall be captive or attached to their mounts by a chain or similar captive device. All retaining pins shall be provided with handles to expedite their removal under conditions of binding or corrosion. Clamps or similar weapon retaining devices shall be hinged to swing away from the mount, and shall be the quick-disconnect type.

c. Ground mount operation. The secondary armament shall be capable of being removed and put into the ground mount while hot. The pintle shall be capable of remaining attached to the weapon, be designed to position itself by gravity, and not need to be held by hand when positioned into the ground mount.

d. Sights. The rear sight notch shall be 3.0 millimeters (0.12 inch) or wider, and the front sight shall be wide enough to fill the notch when taking sight pictures.

Downloaded from http://www.everyspec.com

e. Assembly and disassembly. The secondary armament shall be designed such that the barrels are not capable of incorrect assembly and are capable of being changed from the inside of the fighting compartment without affecting the boresight. The design shall include spring-loaded retainers, releases, and detents capable of being released by the use of the finger only. The driving rod and spring, or similar kinetic-energy mechanical assemblies, shall have a positive release or lock and not be hazardous if accidentally released during servicing. After servicing, the weapon shall be capable of being dry-fired without damage to ancillary parts.

f. Solenoids. Solenoids shall be capable of activating the firing mechanism of the weapon both manually and electrically. When checked electrically, the solenoid shall produce an audible click or visual signal to indicate that it is functioning. Solenoids shall be adjustable, or provided with an adjustment in the linkage to limit or compensate for tolerance buildup, or have sufficient plunger and armature travel to eliminate the need for adjustment.

g. Solenoid removal and replacement. Removing and replacing solenoids shall not require extensive assembly or disassembly of the weapon. Wiring and connectors shall be mounted such that they will not be caught in turret rings or gun breeches. Wiring shall be protected against abrading through abuse or striking a surface when personnel are removing, replacing, or servicing the weapon. To guard against misconnection, the solenoid shall have an electrical connector designed to eliminate reverse polarity.

h. Operation. A weapon shall be capable of being loaded without being cocked.

(1) Loading. The weapon shall be capable of being loaded by a 5th percentile female and 95th percentile male hand in both the vehicle and the ground mount.

(2) Headspace and timing. The weapon shall not require headspace or timing, but where these are required, a simple go/no-go system shall be used.

(3) Non-destructive feedback. Non-destructive feedback shall be used to indicate whether the headspace or timing is correct.

(4) Charging. The weapon shall be capable of being charged by the central 90 percent of suitable-clothed and equipped users. For ground mount weapons, charging shall be possible with the user in the prone position. Where wires or chains are used to charge the weapon, the action of charging shall be a non-directional reaction to an applied force. Charging resistance shall not exceed 340 Newton meters (250 foot-pounds) breakaway or 80 Newton meters (60 foot-pounds) sustained.

(5) Expended rounds. Expended brass and links shall be caught by a spent brass container or be ejected outside the fighting compartment. The trajectory and path of the ejected casings shall be such that ejection will not injure a crewmember, interfere with crew operations, or affect other equipment. The weapon design shall permit the central 90 percent of suitably clothed and equipped users to remove jammed cases simply and quickly without disassembly of the weapon and without endangering the hand. If a tool is required, it shall be mounted to, or be captive to, the weapon on which it is to be used.

(6) Ammunition chutes. Flexible ammunition chute openings shall be large enough to allow the ammunition to be guided through the chute by a 5th percentile female to 95th percentile male hand and shall be free of sharp edges that could cut the hands of personnel during loading operation.

(7) Rate selectors or safeties. Rate selectors, safeties, or triggers shall be clearly identified to indicate their position and shall be of sufficient size and resistance to accommodate a 5th percentile female and 95th percentile male arctic-clothed hand. Detents shall be provided for each position on rate selectors or safeties.

5.13.3.2.3 Small arms. Small arms design shall meet the following:

a. General. In this section the term “user” refers to the rifleman or gunner, as appropriate.

(1) Design. Weapons shall be designed so the central 90 percent of suitably clothed and equipped users can perform all required tasks (both field operations and maintenance) easily and efficiently in daylight and at night, and in either the standing or prone position.

(2) Field assembly. When the user must reassemble parts under field conditions, their mating surfaces shall be beveled to simplify assembly.

(3) Surfaces. Surfaces of the weapon or its attachments that normally contact the user’s body or clothing during firing or maneuvering shall be smooth, without sharp edges, or discontinuities.

(4) Thermal insulation. Any part of the weapon or attachments that contacts the user’s skin shall have thermal insulation.

Downloaded from http://www.everyspec.com

(5) Minimize projections. Weapon design shall minimize projections that could impede movement through dense vegetation.

(6) Unavoidable projections. Unavoidable projections, such as the front sight post, shall be angled toward the back of the weapon rather than perpendicular to its barrel.

(7) Controls or latches. A weapon's control or latches shall be designed and located so they will not be actuated unintentionally during fire or maneuver.

(8) Avoiding weapon damage. Weapons shall be designed so users will not damage them by operating controls in the wrong sequence or by using full-hand force.

(9) Assembly. Weapons shall be designed so parts cannot be assembled improperly.

(10) Durability. Weapon controls shall be sufficiently sturdy and durable to prevent damage from normal handling in the field.

(11) Captive hardware. Whenever the user is likely to remove retaining pins during field operations or maintenance, captive hardware shall be used to prevent pin loss.

(12) Weapon's safety. The weapon's safety shall be located so the user can change from SAFE to FIRE, and vice versa, quickly, without moving either hand from its normal firing position.

(13) Distinctive shape. Weapon controls shall have distinctive shapes and locations to simplify their identification and use during stressful situations.

(14) Safety. Safety shall be designed into weapons by assuring that no part of the weapon could endanger the user's face during firing when the head is held in the proper eyesight position.

b. Rifles and machine guns. Rifles and machine guns shall be in accordance with the requirements below.

(1) Charging handle. The charging handle shall not interfere with the bolt during firing.

(2) Magazines. Magazines shall be designed in accordance with the following criteria:

(a) Magazines shall only be insertable in the correct orientation (i.e., not with cartridges facing the wrong way).

(b) Magazines shall be held with one hand, and have a nonslip finish on surfaces the user will hold during all handling operations.

(c) Loading shall require only inserting the magazine and charging the weapon (but no additional human tasks).

(d) A particular loading pattern is not desired; however, where this is unavoidable, a magazine loading diagram shall be provided.

(3) Bipods. When a bipod is used, it shall be designed with the following characteristics:

(a) The user wearing arctic mittens shall be able to extend or retract the bipod easily and quickly.

(b) Recoil and stresses of field maneuvering shall not disturb the bipod's extended or retracted setting.

(c) With the bipod retracted, the user shall be able to grasp the foregrip without obstruction, in either the prone or standing assault position.

(d) The bipod shall accommodate uneven terrain without cant.

(e) When attached to the weapon, but retracted, the bipod shall not tangle with vegetation.

(4) Rear sight. The rear sight shall be designed with the following characteristics:

(a) All component parts shall be positively retained.

(b) The rear aperture and other parts shall remain secure during the stresses of carrying and firing.

(c) Windage and elevation controls shall have detents to prevent disturbing of settings as a result of combat stresses of carrying and firing.

(d) The design shall allow the user wearing arctic mittens to set windage and elevation controls quickly, easily, and precisely, without tools.

(e) Windage and elevation controls shall be clearly differentiated to minimize confusion.

Downloaded from http://www.everyspec.com

(f) Windage and elevation control settings shall be immediately obvious, in daylight, when the user is in any normal firing position.

(g) The user, when in a normal firing position, shall able to verify setting quickly without moving the body or the weapon, manipulating any sight component, counting, or requiring visual or auditory cues.

(5) Expended cases. Weapons shall eject expended cases into the first quadrant (forward and to the right).

5.14 Peripherals.

5.14.1 User authentication.

5.14.1.1 Log-on/off procedures.

5.14.1.1.1 Log-on procedures. In applications where users must log onto the system, log-on shall be a separate procedure that must be completed before a user is allowed to select among any operational options.

a. Automatic log-on display. Appropriate prompts for log-on shall be automatically displayed on the user's terminal with no special action required other than turning on the terminal.

b. Log-on feedback. Users shall be provided feedback relevant to the log-on procedure that indicates the status of the inputs. The password shall not be echoed on the display. An asterisk (*) shall be displayed for each character when inputting secure passwords during log-on.

c. Log-on error. If a user cannot log-on to a system, a message shall be provided to explain the reason for this inability.

d. Log-on processes.

(1) User identification. User identification procedures shall be as simple as possible, consistent with adequate data protection.

(2) Password choice. When passwords are required, users shall be allowed to choose their own passwords.

(3) Guidelines. Guidelines for password selection shall be given so that users will not choose easily guessable passwords.

(4) Changing passwords. Users shall be allowed to change passwords whenever they choose. All passwords shall be changed at periodic intervals, not to exceed six months.

5.14.1.1.2 Log-off procedures. When a user signals for system log-off, or application exit or shutdown, the system shall:

a. Check transactions. Check pending transactions to determine if data loss seems probable.

b. Confirm prompt. Prompt for confirmation before the log-off command is executed.

5.14.1.1.3 Data protection/security. Data protection/security shall be in accordance with the requirements below.

a. Displayed security classification. When displayed data are classified for security purposes, a prominent indication of security classification level shall be labeled in each display.

b. Data security. Data shall be protected from unauthorized use, potential loss from equipment failure, and user errors.

(1) Automated measures. Automated measures shall be provided to minimize data loss from intruders in a system.

(2) Warnings. Computer logic shall be provided that will generate messages and alarm signals in order to warn users of attempted intrusion by unauthorized users.

(3) Simulated data. When simulated data and system functions are provided (perhaps for user training), real data shall be protected. Real system use shall be clearly distinguished from all simulated operations. In applications where either real or simulated data can be displayed, a clear indication of simulated data shall be included as part of the classification label.

5.14.2 Plotters and recorders.

Downloaded from http://www.everyspec.com

5.14.2.1 Use. Plotters and recorders shall be used when a visual printed record of continuous graphic data is necessary or desirable.

5.14.2.2 Visibility. Critical graphics (e.g., points, curves, and grids that must be observed when the recording is being made) shall not be obscured by pen assembly, arm, or other hardware elements.

5.14.2.3 Contrast. A luminance contrast not less than 1:1 shall be provided between the plotted function and the background on which it is drawn.

5.14.2.4 Take-up device. A take-up device for extruded plotting materials shall be provided when necessary or desirable.

5.14.2.5 Graphic overlay. Graphic overlays shall be provided where these may be critical to proper interpretation of graphic data as it is being generated. Graphic overlays shall not obscure or distort the data.

5.14.2.6 Smudging/smearing. The plot shall resist smudging or smearing under operational use.

5.14.2.7 Annotation. Where applicable, plotters and recorders shall be designed or mounted so that the user can write on or mark the paper while it is still in the plotter or recorder.

5.14.2.8 Printed output location. The printed output shall be located within easy reach of those who need it.

5.15 Ship and marine structure valves.

5.15.1 General design requirements.

5.15.1.1 Handle location. Valve handles shall be located so the operator or maintainer does not have to stand on nearby pipes, cable trays, handrails, equipment, or any object not meant specifically to be used as a standing surface for the operation, maintenance, repair, or replacement of any valve.

5.15.1.2 Clearance. A minimum of 76 millimeters (3.0 inches) clearance shall be provided between the outside rim of a valve handwheel or the end of a valve lever and any obstacle located throughout the handwheel or lever's field of travel (also see table IX).

5.15.1.3 Emergency valves. Valves used for emergency operations shall not be located below deck gratings or behind covers. If it is absolutely necessary to locate emergency valves below grating, an extender rod shall be provided to place the operating handle or handwheel above grating level.

5.15.1.4 Valve cover. If a valve is located behind a cover (e.g., to meet a regulatory requirement), the cover shall be capable of being opened without requiring any tools or the removal of any securing fasteners. The cover shall be clearly labeled to identify the valve.

5.15.1.5 Valve closure. Valve handles shall close with a right-hand (clockwise) motion of the handwheel or lever when facing the end of the valve stem.

5.15.1.6 Valve position. Valves shall be provided with a means to determine valve position, with respect to the open and closed positions.

5.15.1.7 Indicators. Valve position indicators shall be installed so the indicator is directly visible to the operator or maintainer from the normal body position required to open or close the valve.

5.15.1.8 Mechanical extenders. Valves that cannot be located within the operator's or maintainer's reach limits, as given in the following subsections, shall be operated by mechanical extenders rather than chain operators.

5.15.1.9 Remote control. For valves fitted for remote control, an independent indicator showing the current state of the valve (open, closed, partially open) shall be provided on or adjacent to the control.

5.15.1.10 Labeling. Labels shall be used to identify manual valves in accordance with the requirements in 5.4 and 5.1.1.2.4.

Downloaded from http://www.everyspec.com

5.15.1.11 Motorized valves. Motorized valves with internal adjustable devices shall be mounted so the door to the internal compartment opens toward the operator/maintainer.

5.15.1.12 Operating force. The maximum force required to initially crack open a manual valve shall be set on the basis of the expected user population, valve actuator height and orientation with respect to the user, valve lever or handwheel design and size, operating environment, and frequency and criticality of the valve operation. The maximum force required to initially open a manual valve shall not exceed the limits shown in figure 86.

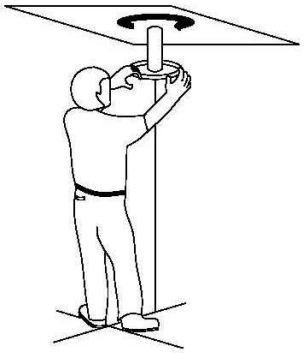

	Waist high		Chest high		Overhead	
N•m(ft•lb)	Male	Female	Male	Female	Male	Female
6" Wheel	27.12 (20)	16.27 (12)	27.12 (20)	16.27 (12)	22.64 (16.7)	13.59 (10.02)
12" Wheel	79.99 (59)	48 (35.4)	78.64 (58)	45.55 (33.6)	48.81 (36)	29.29 (21.6)
21" Wheel	115.24 (85)	69.14 (51)	108.46 (80)	65.08 (48)	74.57 (55)	44.74 (33)

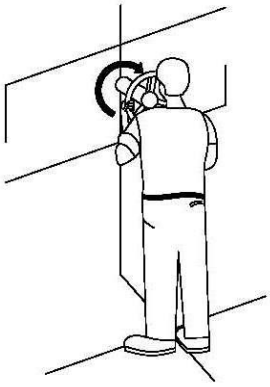

	Knee high		Waist high		Chest high		Overhead	
N•m(ft•lb)	Male	Female	Male	Female	Male	Female	Male	Female
6" Wheel	25.62 (18.9)	28.88 (11.3)	25.35 (18.7)	15.18 (11.2)	24.66 (18.2)	14.78 (10.9)	20.61 (15.2)	12.34 (9.1)
12" Wheel	81.34 (60)	48.81 (36)	65.07 (48)	39.05 (28.8)	71.85 (53)	43.11 (31.8)	56.94 (42)	34.17 (25.2)
21" Wheel	143.71 (106)	86.23 (63.6)	116.58 (86)	69.96 (51.6)	124.73 (92)	74.84 (55.2)	104.40 (77)	62.64 (46.2)

FIGURE 86. Upper limits for handwheel torque.

5.15.1.13 Heavy valve location. All valves that must be lifted for repair, replacement, or maintenance and which weigh more than the limits defined in 5.8.6.2 shall be located for ease of lifting and use of lifting devices.

5.15.1.14 Clearance. There shall be sufficient clearance above each valve to attach the lifting device and pull the valve, or valve operating mechanism, and complete all maintenance tasks in place without removing the valve.

5.15.2 Valve criticality and location.

5.15.2.1 Valve criticality. Valves shall be rated by criticality to help ensure that critical valves are located to provide for rapid and effective identification and operation. The following three categories shall be used:

Downloaded from http://www.everyspec.com

5.15.2.1.1 Category 1.

a. Category 1 valves are as follows:

(1) Valves critical for safety or operations.

(2) Valves used frequently (at least once in a six-month period) for routine operation and maintenance.

(3) Valves that have a high likelihood of failure.

(4) Valves where the consequence of failure or lack of quick access is serious.

(5) Valves with handwheels or handles greater than 610 millimeters (24 inches) in length or diameter.

b. Examples of valves typically found in category 1 include:

(1) Control valves, their bypasses, and isolation valves.

(2) Relief valves and depressuring valves.

(3) Trip and anti-surge control valves.

(4) Emergency shutdown valves.

(5) Liquid cargo transfer valves (especially for hydrocarbons and chemicals).

5.15.2.1.2 Category 2. Category 2 valves are not critical for operations but are required for routine operation and maintenance. These valves have an expected operating frequency of less than once per six months. Examples of valves typically found in Category 2 are the following:

a. Sewage treatment valves.

b. Condensate drain valves.

c. Service oil valves.

d. Potable water valves.

e. Ship service air valves.

f. Hydraulic service valves.

g. Defrost gas valves.

h. Manual valves for normal startup/shutdown operation.

i. Valves where quick action is not required.

j. Drain and vent valves 25 millimeters (1.0 inch) or less in size with flange or cap end.

5.15.2.1.3 Category 3. Category 3 valves are not critical for operations or routine maintenance but are used infrequently for particular tasks such as commissioning, startup, shutdown, or rarely performed maintenance tasks. Category 3 valves shall include the following:

a. Valves used in dry dock only.

b. Valves used in initial vessel or structure commissioning.

c. Valves used for decommissioning.

d. Valves used only during startups after extended shutdowns.

e. Valves used during extended shutdowns.

f. Valves used to isolate items such as pressure vessels or tanks for inspections.

g. Tie-in valves used for tie-in purpose only (hot-tap valves).

h. Valves for pressure tests.

5.15.2.2 Location.

5.15.2.2.1 Category 1 valves. Permanent access shall be provided at deck level or via a permanent standing elevated surface. If such access is not practical, access by stair is acceptable.

Downloaded from http://www.everyspec.com

5.15.2.2.2 Category 2 valves. These valves shall be located with permanent access at deck level, or access via stairs. However, with written permission of the procuring agency, alternative means of access including vertical ladders with a purpose-built standing surface, or use of other auxiliary equipment to gain access (e.g., mobile platforms, personnel lift, scaffolding) for maintenance purposes may also be used as long as drawings indicate the planned access means, and clearances and space are provided in the design to accommodate personnel, tools, parts, and the access equipment. These valves shall be accessible without having to remove bulkhead panels or other similar obstructions.

5.15.2.2.3 Category 3 valves. Permanent accessibility is desirable for such valves, but it is not mandatory. No specific location requirements are imposed. The use of auxiliary equipment to gain access (e.g., mobile platforms, personnel lift, scaffolding) is permissible; however, access requirements and equipment type shall be indicated on drawings, and clearances and space shall be allowed for personnel, tools, parts, and access equipment in the design.

5.15.3 Handwheel-operated valves, mounting heights, and orientations.

5.15.3.1 One hand. Handwheels of less than 152 millimeters (6.0 inches) in diameter shall be designed and oriented for one-hand operation.

5.15.3.2 Two hands. Handwheels equal to or greater than 152 millimeters (6.0 inches) diameter shall be designed and oriented for two-hand operation.

5.15.3.3 Mounting height. Valve handwheels, including Category 1 valves, shall be located as shown on figure 87, figure 88, and figure 89.

Downloaded from http://www.everyspec.com

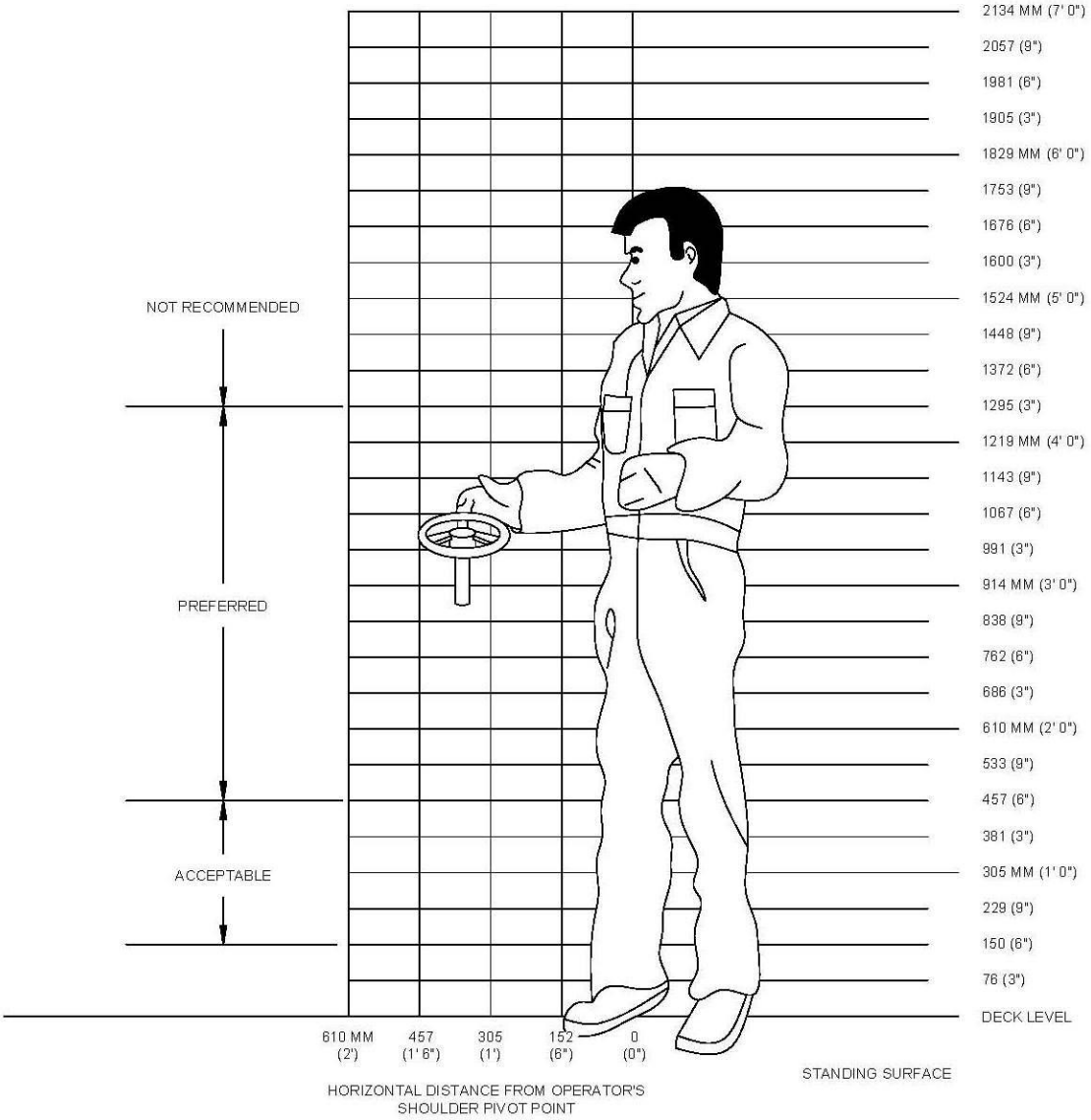

FIGURE 87. Mounting heights for handwheel valves with vertical stems.

Downloaded from http://www.everyspec.com

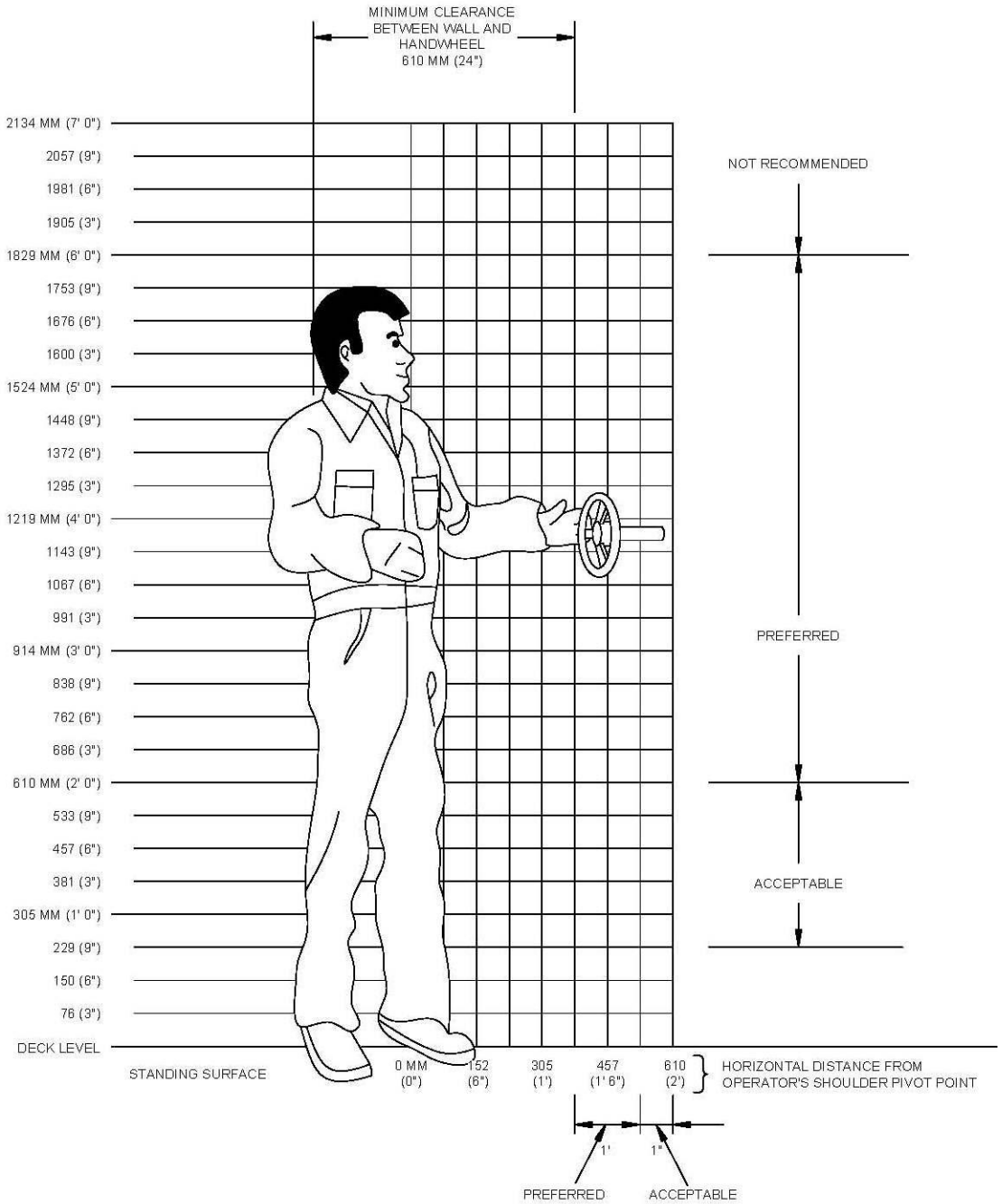

FIGURE 88. Mounting heights for handwheel valves with horizontal stems.

Downloaded from http://www.everyspec.com

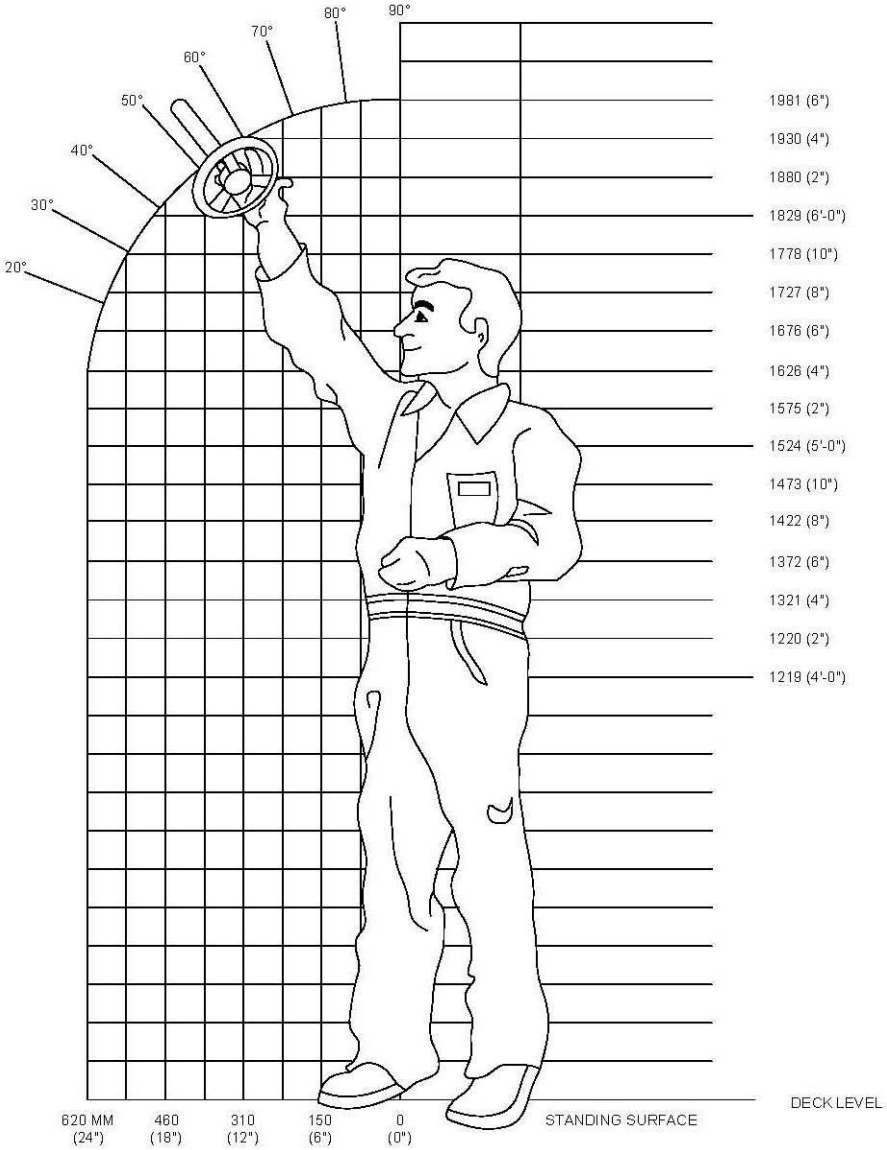

NOTE:

1. Horizontal distance from user's shoulder pivot point.

FIGURE 89. Mounting heights for handwheel valves with angled stems.

5.15.3.4 Preferred location. Preferred choice locations shall be used for all Category 1 valves as well as the Category 2 valves with the following purposes or characteristics:

a. Are associated with safety and critical systems such as fire fighting, damage control, propulsion, process flow, and steering.

b. Possess handwheels or levers greater than 406 millimeters (16 inches) in diameter or length.

c. Have operational time constraints, especially in an emergency manual mode.

Downloaded from http://www.everyspec.com

5.15.3.5 Acceptable location. Acceptable locations are appropriate locations for the remaining Category 2 and Category 3 valves.

5.15.3.6 Handwheel diameter. Valve handwheels shall not be larger than 610 millimeters (24 inches) in diameter.

5.15.3.7 Handwheel surfaces. Handwheel grasping surfaces shall have knurling, indentations, or other configurations to maximize the grip on the wheel surface.

5.15.3.8 Rotations. The number of rotations required to go from fully open to closed (or closed to open) shall be limited to the smallest number possible.

5.15.4 Lever-operated valves, mounting heights, and orientations.

5.15.4.1 Vertical stem orientation. Valves oriented with the stem in the vertical position shall be used when the valve lever can be located between 762 millimeters (30 inches) and 1270 millimeters (50 inches) above the standing surface as shown on figure 90. The handle on all vertical stem valves shall not rotate into walkways or working areas so as to become a tripping or knee knocker hazard.

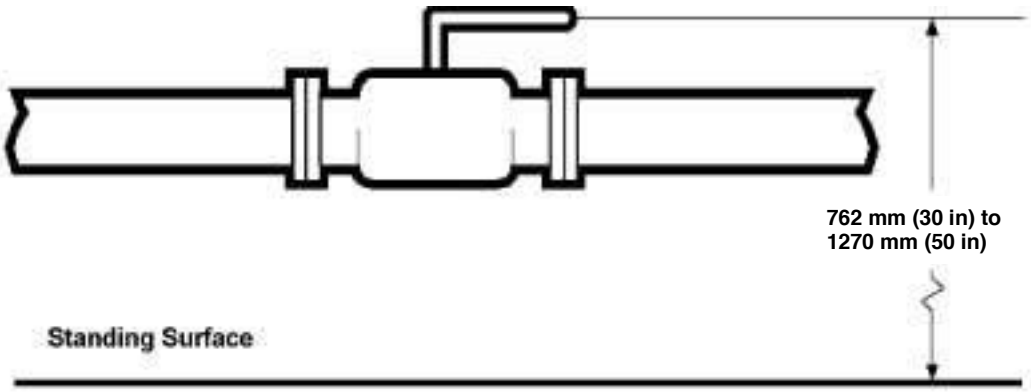

FIGURE 90. Mounting heights for lever-operated valves with vertical stems.

5.15.4.2 Horizontal stem orientation. Valves oriented with the stem in a horizontal position are preferred when the lever is located between 152 millimeters (6.0 inches) and 762 millimeters (30 inches), or more than 1270 millimeters (50 inches) above the standing surface, as shown on figure 91. The maximum heights above the standing surface to the lever tip shall not exceed 1905 millimeters (75 inches).

Downloaded from http://www.everyspec.com

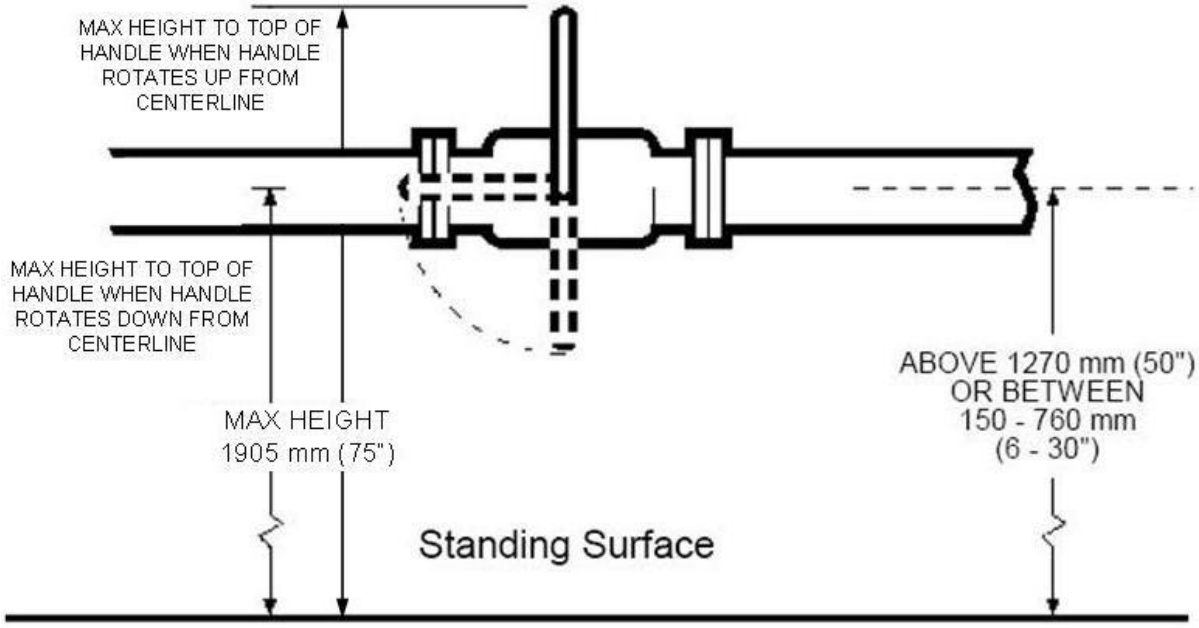

FIGURE 91. Mounting heights for lever-operated valves with horizontal stems.

5.15.4.3 Handle length. Valve lever handles shall be as long as necessary to produce the necessary torque to crack open and turn the valve. Handle lengths normally range from 356 millimeters (14 inches) to 914 millimeters (36 inches) in length.

5.15.4.4 Handle shape. Valve lever handles may be of any shape (circular is preferred) but shall have a circular grasping surface for the final 178 millimeters (7.0 inches) of its length. The grasping surface shall be between 13 millimeters (0.5 inch) and 25 millimeters (1.0 inch) in diameter and shall have a non-slip surface.

5.15.5 Alternative valve orientations.

5.15.5.1 Overhead valves. Valves located in the overhead with the handwheel or handle rotating in a plane parallel to the walking surface shall be avoided. When it is necessary to locate valves above an operator's or maintainer's head with the valve handwheel or lever oriented parallel to the standing surface, the following design criteria shall be applied:

a. The handwheel or lever shall be at least 1956 millimeters (77 inches) above the deck or other walking surface.

b. The handwheel or lever shall be no more than 508 millimeters (20 inches) in diameter or length.

c. The maximum operating force shall be less than 20 Newton meters (15 foot-pounds).

5.15.5.2 Valves in walkways. Valves in walkways shall meet the following:

a. Valve handwheels or levers shall not protrude into dedicated walkways or work areas below the overhead height stated in 5.15.5.1.

b. Category 1 valves shall not be placed above the overhead height stated in 5.15.5.1.

5.15.5.3 Valves accessible from one side. When access to a lever-operated valve is available from one side only, the valve shall be mounted such that the lever moves to and from the accessible side where the operator or maintainer will be positioned as shown on figure 92.

Downloaded from http://www.everyspec.com

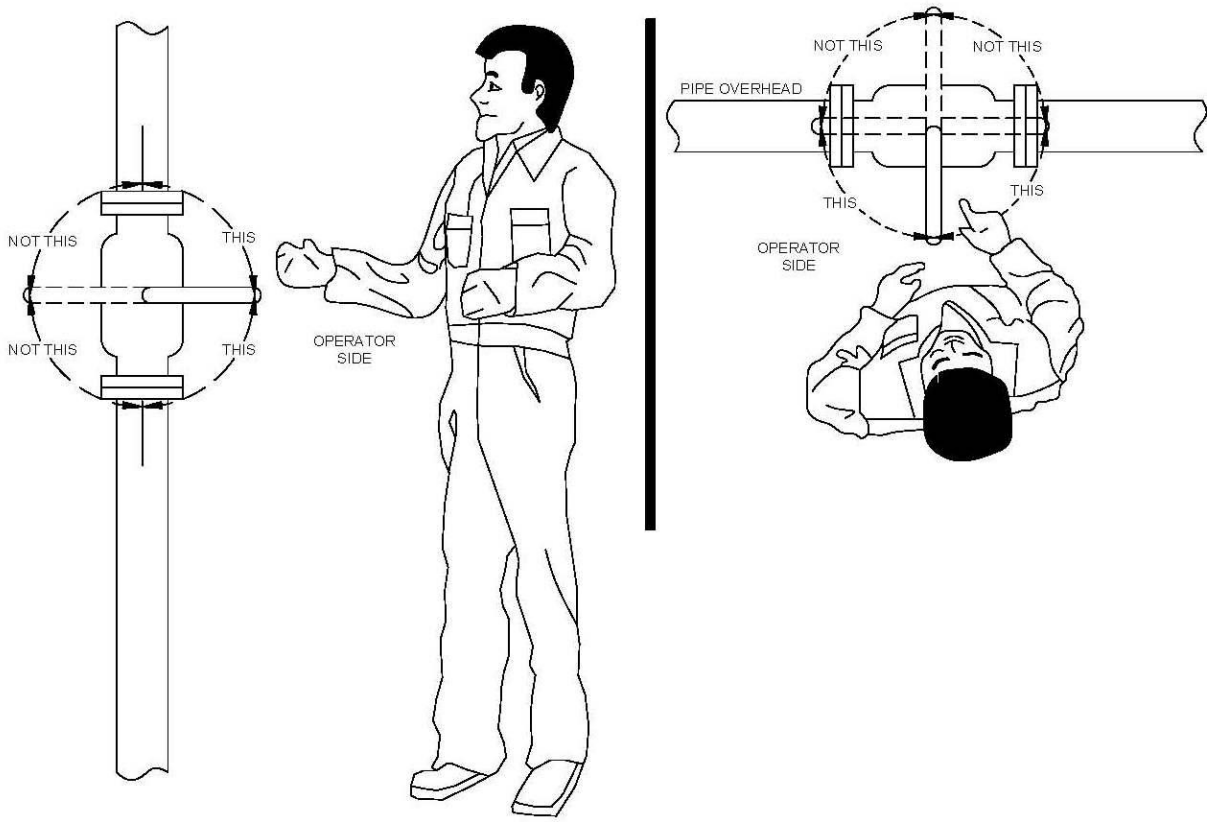

FIGURE 92. Direction of travel for valve levers accessible from one side only.

5.15.5.4 Valves at standing surface. Valves at standing surface shall meet the following:

a. If a Category 2 or 3 valve is located at the standing surface, so as to require stooping or squatting to operate the valve, the preferred valve position in relation to an operator's or maintainer's body position is shown on figure 93.

b. Category 1 valves shall not be placed to require operation by a squatting or kneeling operator or maintainer.

Downloaded from http://www.everyspec.com

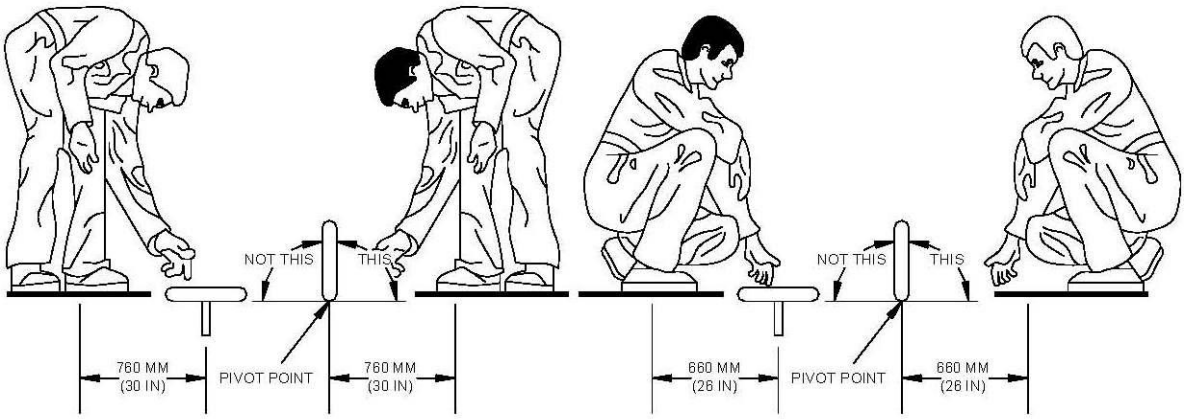

FIGURE 93. Physical reach from a stooping or squatting position.

5.15.5.5 Valves below the standing surface. Valves below the standing surface shall meet the following:

a. Valves located below the operator or maintainer's standing surface, either horizontal- or vertical-oriented valves, shall be installed as shown on figure 94.

b. Category 1 valves shall not be located so the valve handwheel or lever is below deck level.

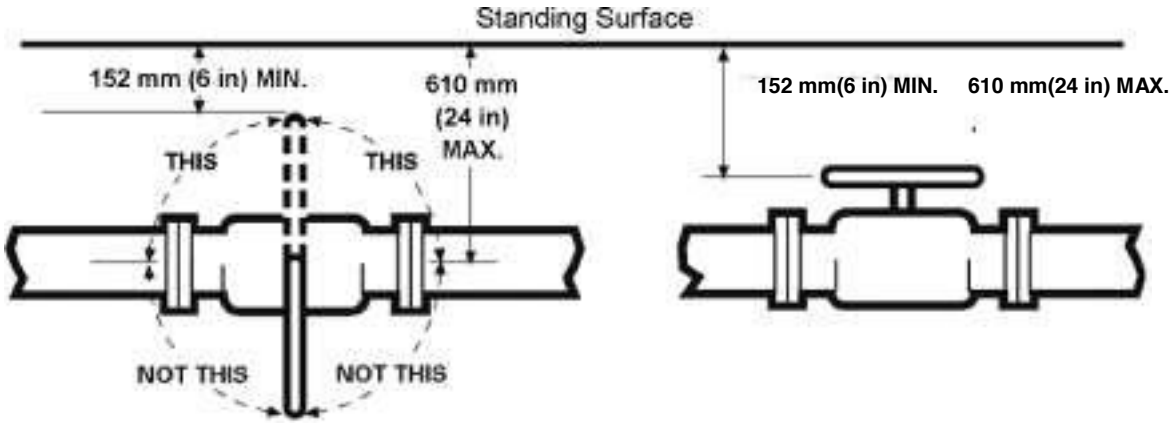

FIGURE 94. Mounting position for valve levers and handwheels below standing surface.

5.15.5.6 Deck opening sizes. Deck opening sizes to reach and operate levers or handwheels located below the standing surface shall be as shown in table XLIX.

Downloaded from http://www.everyspec.com

TABLE XLIX. Access opening and mounting depth dimensions for levers and handwheels mounted below the standing surface.

Handwheel		
Valve handle (diameter or length)	**Depth below deck**	**Deck opening size**
127 mm (5.0 in) or less	152 – 254 mm (6.0 – 10 in)	178 mm (7.0 in)
	Greater than 254 mm (10 in)	216 mm (8.5 in)
127 mm (5.0 in) or more	152 mm (6.0 in) to 457 mm (18 in)	The diameter of the handwheel plus 152 mm (6.0 in) with a minimum of 356 mm (14 in)
Lever		
Valve handle (diameter or length)	**Depth below deck**	**Deck opening size**
Any lever length	Any depth up to 457 mm (18 in)	254 mm (10 in)

5.15.5.7 Valves accessible from ladders.

a. Valves that require operation from a ladder shall be avoided.

b. Category 1 valves shall not be located to require operation from a ladder.

5.15.5.7.1 Ladder operations. Where valves must be operated from a ladder, they shall be limited to those that can be operated with one hand (i.e., valves with handwheels less than 152 millimeters (6.0 inches) in diameter and lever valves). It is preferred that the valve handle not turn parallel to the operator's or maintainer's body; but if this is necessary, the ladder shall be positioned so the valve handle is not more than 457 millimeters (18 inches) distance forward of the ladder (see figure 95).

5.15.5.7.2 Distance. Valve handles that turn perpendicular to the ladder shall be no farther from the operator or maintainer than 1219 millimeters (48 inches) distance as measured from the far side of the ladder to the valve stem (see figure 95).

Downloaded from http://www.everyspec.com

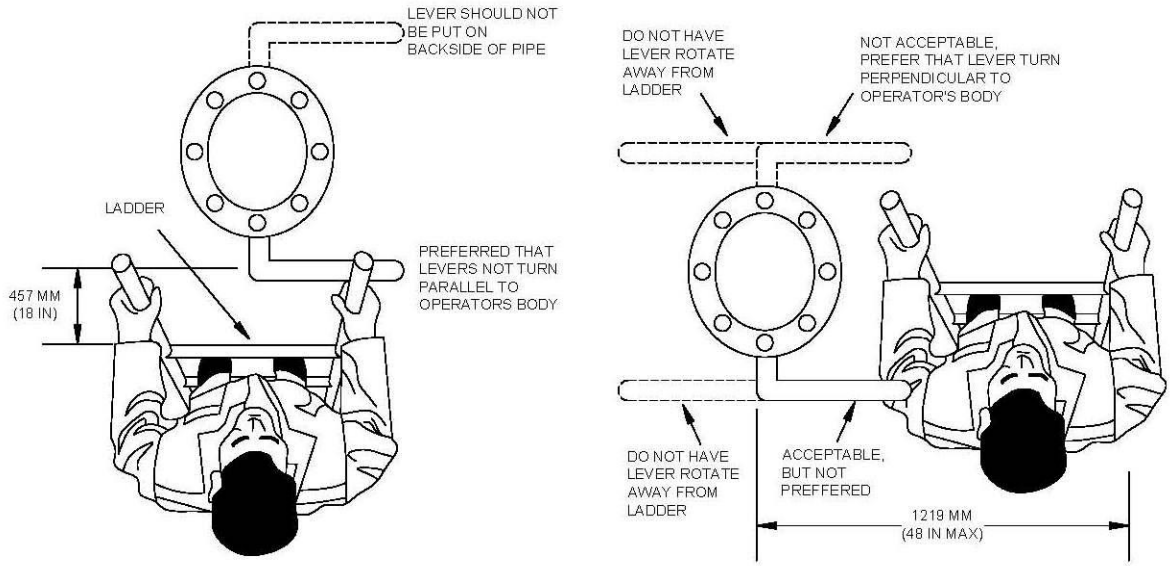

FIGURE 95. Orientation and reach from ladder parallel to valves.

5.15.5.7.3 Additional requirements. Additional requirements, as depicted on figure 96 and figure 97, shall be incorporated for valves reached using ladders.

Downloaded from http://www.everyspec.com

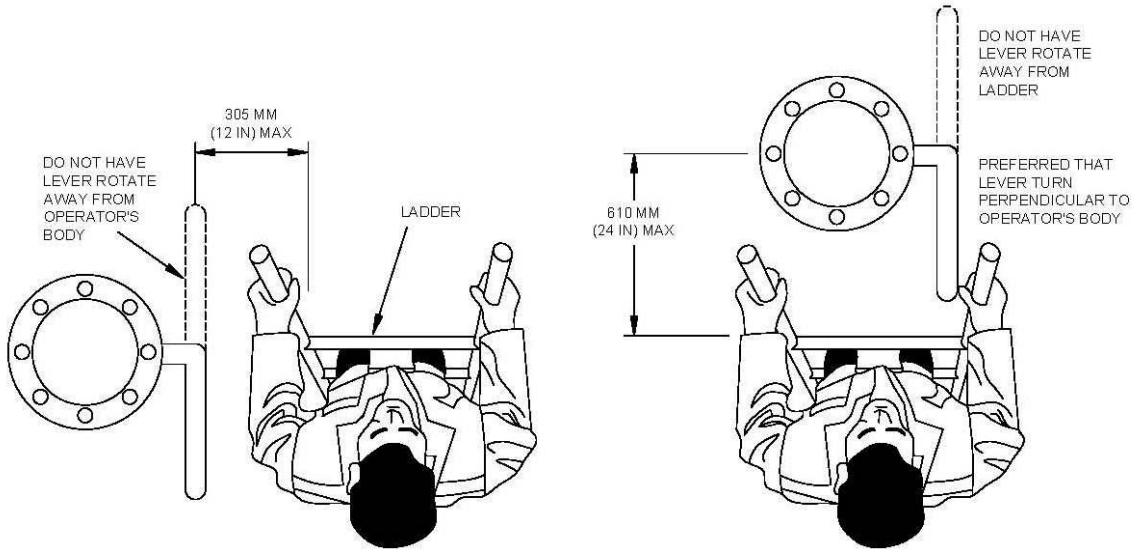

FIGURE 96. Orientation and reach from ladder perpendicular to valves.

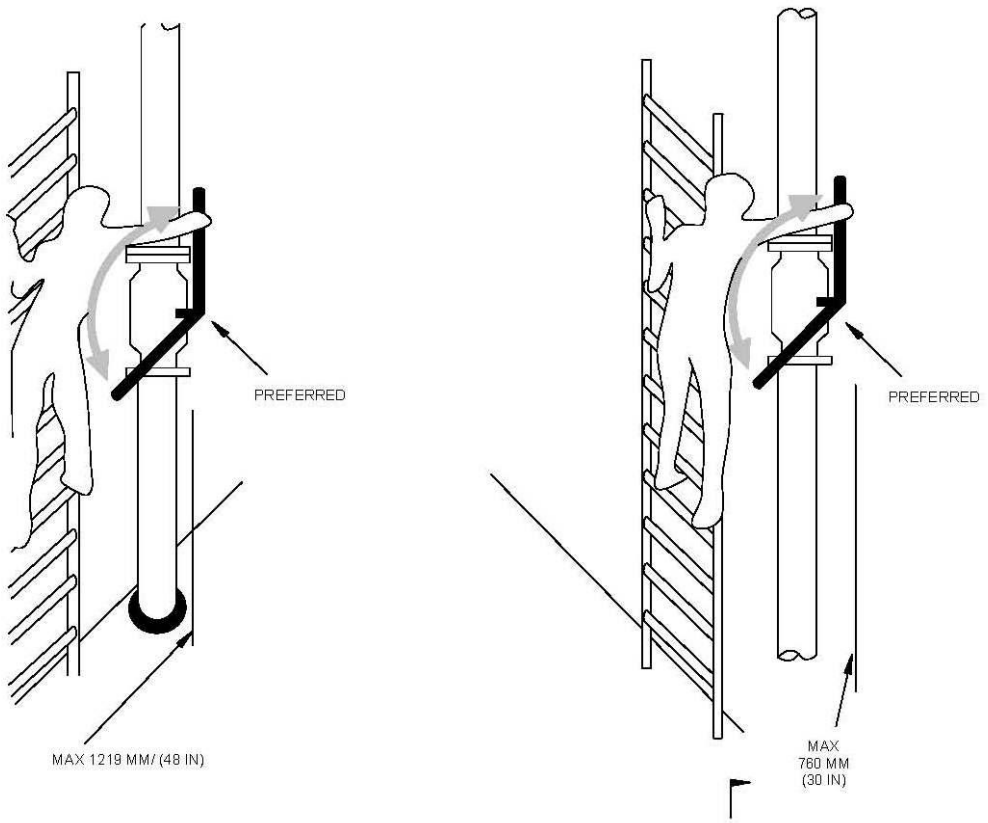

FIGURE 97. Operating valves from a ladder.

Downloaded from http://www.everyspec.com

5.15.5.8 Valve manifolds. Where valves are mounted together to create a valve manifold (e.g., fuel oil transfer or cargo oil transfer), the valve handles shall be arranged such that as the operator or maintainer faces the valve manifold, the location of the tank or pump with which the valve is associated has direct spatial relationship with, the location of the associated item as shown on figure 98 and figure 99. The overall vertical orientation and horizontal location of the manifold valves shall provide a direct spatial relationship between the valves in the manifold and the equipment (e.g., tank, pump, exchanger) associated with the valves (see figure 100).

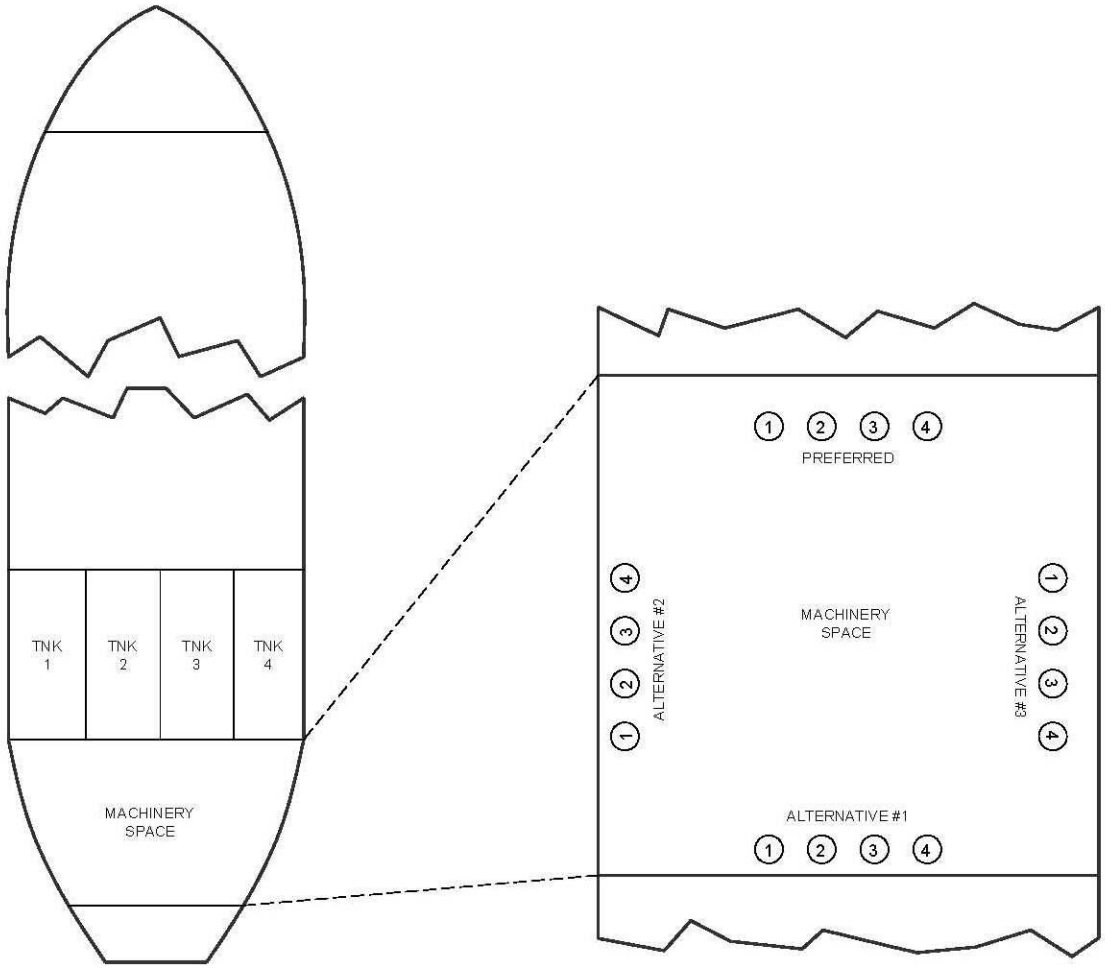

FIGURE 98. Valve manifold for tanks located athwartship.

Downloaded from http://www.everyspec.com

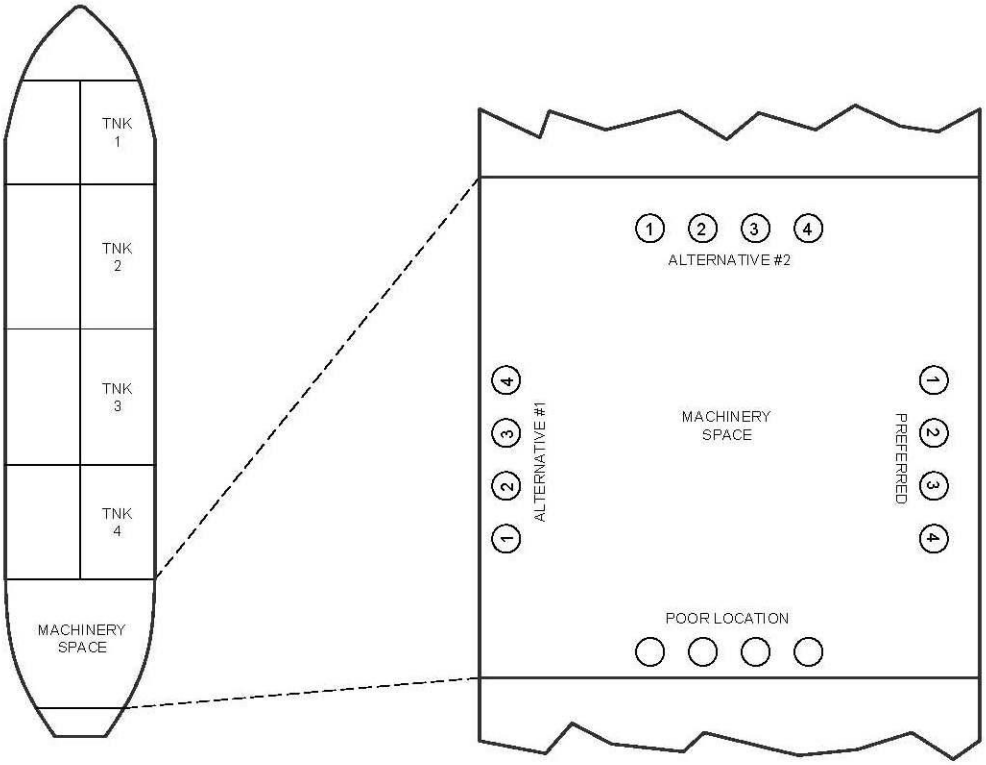

NOTE:

1. The starboard-facing orientation of the valve manifold is preferred over the port-facing orientation to allow the ordering of the tank numbers to read from left to right. This preference principle is different from that for a mimic control console (such as a ballast control console) where the required console orientation is facing forward or to port with the forward-most items located on the right hand side of the console.

FIGURE 99. Valve manifold for tanks located fore and aft.

Downloaded from http://www.everyspec.com

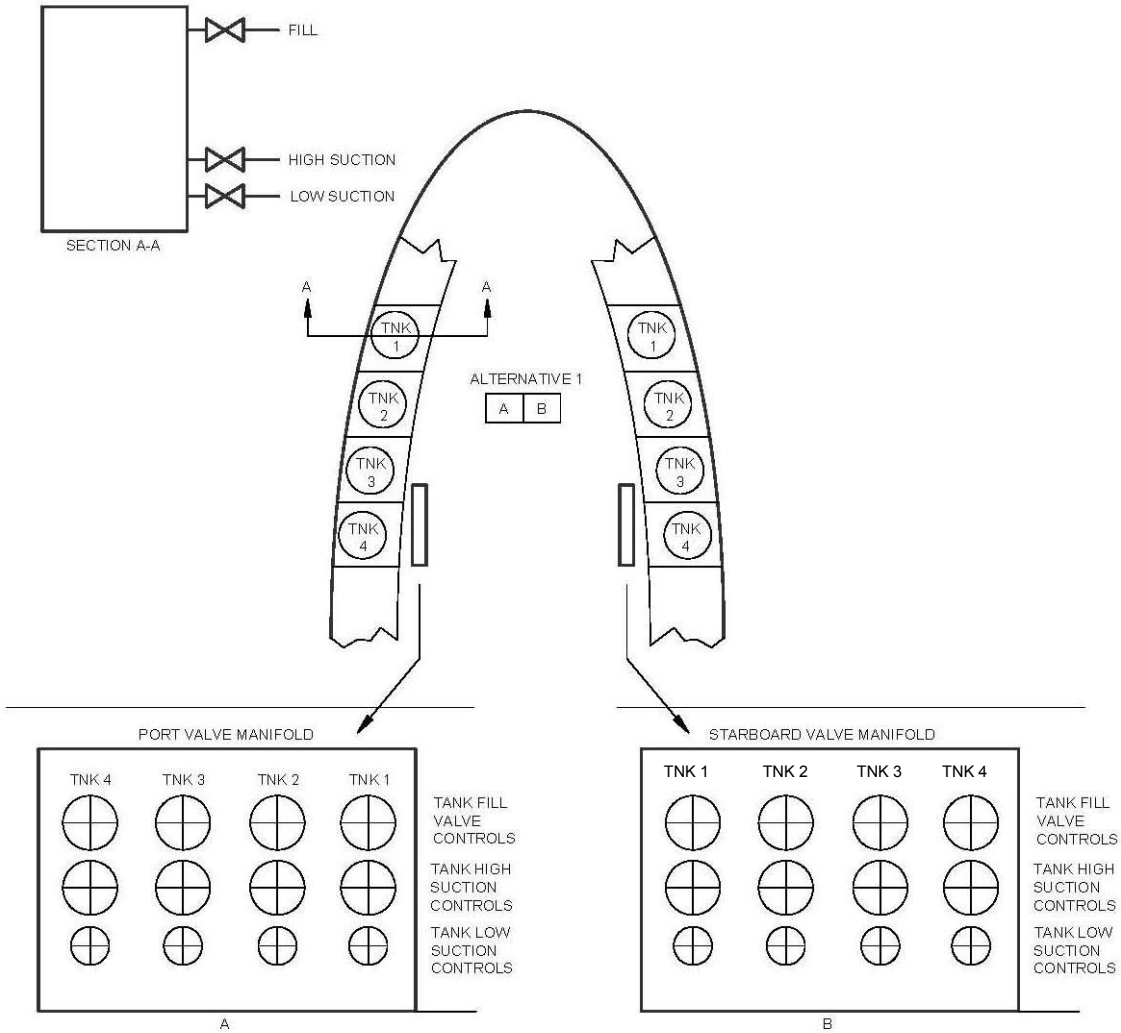

FIGURE 100. Valve manifold for fill, high suction, and low suction valves.

6. NOTES

(This section contains information of a general or explanatory nature that may be helpful, but is not mandatory.)

6.1 Intended use. This standard is intended for use as design criteria for military systems, equipment, and facilities, cited contractually in system specifications and elsewhere, and for use as a basis for structuring that part of human factors testing where design characteristics are assessed for purposes of acceptance. It is not intended for use to express binding requirements in conceptual and other early acquisition phases. The standard may be applied to traditional as well as non-developmental item acquisitions.

6.2 Acquisition requirements. Acquisition documents should specify the following:

a. Title, number, and date of this standard.

b. When glove or mitten use is specified (see 5.1.1.6).

c. When barriers are not required on critical switches or switches likely to be inadvertently actuated (see 5.1.4.2.1.d(4).)

d. When ceiling height cannot be reduced to 189 centimeters (74.5 inches) (see 5.6.9.1).

Downloaded from http://www.everyspec.com

e. When use is exclusively by male personnel (see 5.8.6.3.11, 5.10.3.1.3, 5.10.3.1.4, 5.10.3.1.5, 5.10.3.1.6, 5.10.3.2.7, 5.10.3.2.15, 5.10.3.2.16, 5.10.3.2.18, 5.10.3.2.19, and 5.10.4.1.4).

f. When items weighing less than 4.5 kilograms (10 pounds) are required to have handles and grasp areas (see 5.8.6.5.3.a).

g. Specification of the range and type of user population (see 5.10.2.1).

h. When work surfaces can be outside the range of 90 to 93 centimeters (35.4 to 36.6 inches) above the standing surface (see 5.10.3.1.2).

i. When desk tops and writing surfaces can be outside the range of 74 to 79 centimeters (29 to 31 inches) above the floor (see 5.10.3.2.2).

j. When armrests do not need to be provided (see 5.10.3.2.10).

k. When surface colors of Army materiel will not use the guidance of MIL-HDBK-1473 (see 5.11.3.1).

l. The specification of surface colors for Navy materiel (see 5.11.3.2).

m. When reflected light from remote work areas will not be in accordance with the requirements of 5.5.3.4 (see 5.12.2.6.1).

n. The time period before initiating an automatic, safe "return home" capability following loss of communication between the system and users (see 5.12.3.1.21).

o. The time period before initiating a neutralize capability following loss of communication between the system and users (see 5.12.3.1.22).

6.3 Subject term (key word) listing.

Aerospace vehicles

Anthropometry

Controls

Control-display integration

Design

Displays

Environment

Human factors engineering

Human-systems integration

Labeling

Maintainability

Safety

Remote handling

User-computer interface

Valves

Vehicles

Workspace

6.4 Changes from previous issue. Marginal notations are not used in this revision to identify changes with respect to the previous issue due to the extent of the changes.

6.4.1 General changes. General changes made to the "G" revision are summarized below.

a. Modified document structure and grouped related requirements.

b. Added extensive content from MIL-HDBK-759 throughout the standard.

c. Updated figures and tables.

d. Changed recommendations to requirements where appropriate.

Downloaded from http://www.everyspec.com

e. Modified criteria wording, as necessary, to be more direct.

f. Split multiple requirements into individual statements where appropriate.

g. Corrected errors present in MIL-STD-1472F.

h. Deleted unnecessary information.

i. Removed obsolete content and references.

j. Added additional references.

k. Hyperlinked Table of Contents, tables, figures, and embedded references to sections.

6.4.2 Technical changes. Significant technical changes to the "G" revision are summarized sequentially by section in the list below. The list reflects the addition and revision of substantial content and is not comprehensive due to the extent of the changes.

6.4.2.1 Scope. Revised and updated section to include current information.

6.4.2.2 Applicable documents. All reference documents were checked to ensure they were still appropriate and still active. In cases where the reference was no longer appropriate, it was removed. In cases where the reference was inactive, it was replaced with an active reference. Additionally, new references were added as necessary.

6.4.2.3 Acronyms, abbreviations, and definitions. Revised and updated section to include current information.

6.4.2.4 General requirements. Revised and updated section to include current information.

6.4.2.5 Detailed requirements. Design for central 90 percent accommodation (multivariate analysis) was incorporated.

6.4.2.5.1 Controls. Changes were made to the following:

a. Button dimensions for standard cotton flame resistant anti-flash gloves (i.e., Navy flash gloves (as defined in MIL-G-2874E)).

b. Joystick button placement.

c. Trackball button placement.

d. Touch-screen use and design.

e. Adjustable display and keyboard lighting.

6.4.2.5.2 Visual displays. Changes were made to the following:

a. Use of color in displays.

b. Display character and symbol size.

c. Display type.

6.4.2.5.3 Speech and audio systems. Speech intelligibility testing requirements were updated/incorporated.

6.4.2.5.4 Labeling. Placement of labels was updated/incorporated.

6.4.2.5.5 Environment. Changes were made to the following:

a. G-Loading.

b. Lighting, glare, luminance, dark adaptation, and night operations.

c. Noise levels and hearing conservation.

6.4.2.5.6 Ground vehicles. Changes were made to the following:

a. Interior surface and display glare.

b. Adjustability and bracing of mirrors.

Downloaded from http://www.everyspec.com

c. Mirrors as handholds.

d. Headlights and reflectors.

e. Blackout lighting systems.

6.4.2.5.7 Warnings, hazards, and safety. Specific hazards, including radiation, electromagnetic, and burn, were updated/incorporated.

6.4.2.5.8 Physical accommodation. Changes were made to the following:

a. Commonly used anthropometric dimensions.

b. Range of human motion.

c. Human strength and handling capacity.

6.4.2.5.9 Maintenance accessibility. New content added throughout the section.

6.4.2.5.10 Workspace design. Work postures and spaces were updated/incorporated.

6.4.2.5.11 Physical environment design. Changes were made to the following:

a. Stairs and ladders.

b. Passageways and walkways.

6.4.2.5.12 Virtual environments, automated and remotely handled systems, teleoperations, and telepresence. Changes were made to the following:

a. Virtual environments.

b. Automated and unmanned systems.

6.4.2.5.13 Small systems, equipment, and weapons. New content added throughout the section.

6.4.2.5.14 Peripherals. Changes were made to the following:

a. Printers, plotters, and recorders.

b. User system log-on/off procedures and data protection/security.

6.4.2.5.15 Ship marine structure valves. New section derived from U.S. Navy research.

6.4.2.5.16 Maintainability considerations (appendix A). New appendix containing material from MIL-HDBK-759C.

6.4.2.5.17 Anthropometric reference values (appendix B). New appendix containing detailed anthropometric summary data from MIL-HDBK-759C, Notice 1.

Downloaded from http://www.everyspec.com

MAINTAINABILITY CONSIDERATIONS

A.1 SCOPE

A.1.1 Scope. The principles provided in this appendix summarize some of the important features to be incorporated in the design of equipment in order to enhance maintainability. The appendix is not a mandatory part of the standard. Information contained herein is intended for guidance only. Principles are provided for the following:

a. Design for maintainability (see A.2).

b. Design of tools (see A.3).

c. Design of mechanical equipment (see A.4).

d. Mounting and packaging (see A.5).

e. Electronic modules (see A.6).

f. Stowage of equipment (see A.7).

g. Covers (see A.8).

h. Fasteners (see A.9).

i. Conductors (see A.10).

j. Test and service points (see A.11).

k. Test equipment (see A.12).

l. Batteries (see A.13).

A.2 DESIGN FOR MAINTAINABILITY

The following principles should be incorporated when designing for maintainability:

a. Determine the size of required access openings, work surfaces, and workspace so that components are accessible to maintenance personnel, and can be removed and replaced safely, without strain or injury.

b. Study operational system similar to that to be designed. List the maintenance features built into the system and, from the system's maintenance history and experience, identify additional maintenance features that should have been incorporated to improve maintainability.

c. Determine how components should be arranged and located to provide rapid access to those components with the lower reliability that will probably require maintenance most frequently, or whose failure would critically degrade the end item's performance.

d. Identify tools and test equipment already in the operational system that can be made available for maintenance of the materiel being designed.

e. Determine what type, number, and organization of manuals the maintenance personnel will need to maintain the materiel properly, effectively, and safely.

f. Simplify operator and maintenance functions.

g. Use modular or unit packaging or throw-away components and techniques.

h. Use self-lubricating principles.

i. Use sealed and lubricated components and assemblies.

j. Use built-in testing and calibration features for major components.

k. Use self-adjusting mechanisms.

l. Use gear-driven accessories to eliminate belts and pulleys.

m. Minimize the number and complexity of maintenance tasks.

n. Maximize design simplicity.

Downloaded from http://www.everyspec.com

o. Design equipment for quick recognition of malfunctions or marginal performance.

p. Design equipment for quick identification of the replaceable defective components, assemblies, and parts.

q. Design equipment to eliminate torque specifications at organizational or aviation unit maintenance level and minimize need for all other torque specifications.

r. Design equipment to minimize skills and training requirements of maintenance personnel.

s. Design equipment to minimize the types and number of tools and test equipment (both standard and special) required to perform maintenance.

t. Design equipment for accessibility to all systems, equipment, and components requiring maintenance, inspection, removal, and replacement.

u. Design equipment for maximum safety and protection for personnel and equipment.

v. Design equipment to permit maintenance from above and outside in contrast to requiring access for maintenance from underneath.

w. Design of items should facilitate manual handling required during maintenance and comply with established manual force criteria.

x. Design equipment to facilitate safe and easy assembly and disassembly.

y. Design equipment with no more than two-deep packaging for expedient assembly and disassembly.

z. Whenever possible, design equipment to be assembled and disassembled while wearing all levels of mission-oriented protective posture (MOPP) gear.

A.3 DESIGN OF TOOLS

The following principles should be incorporated in the design and distribution of tools:

a. If possible, require only those tools normally found in the maintenance technician's tool kit.

b. Minimize the use of special tools, and the variety and number of sizes of tools required.

c. A comprehensive list of tools needed for all maintenance tasks should accompany each equipment system. This should include all special tools necessary to perform the authorized work, together with the equipment items requiring their use.

d. Equipment should be designed to minimize the need for torque wrenches and could incorporate using self-locking nuts and bolts, as appropriate.

e. If torque wrenches or guns are used for factory assembly and are necessary equipment, provide maintenance personnel with similar tools.

f. Specify tools which are compatible with the design of the equipment on which they will be used as well as with the job to be performed.

g. Provide for the use of speed or power tools such as ratchets, speed screwdrivers, or power wrenches when demanded by torque requirements or space limitations.

h. Enable the technician to assemble a tool for many different uses by providing maintenance personnel with socket wrenches and accessories (breaker bars, extensions, and joints).

i. Positive snap-locking action should be used for connecting sockets to the various components of a socket set. They should be designed so they can be easily connected and disconnected.

j. Tool handles should have adequate serrated gripping surfaces. Tools used where dropping could result in maintenance delay or possible tool loss should be provided with thongs sufficiently long to enable the user to place a loop over his or her wrist.

k. The use of heat- or cold-resistant handles on tools which are to be used in extreme climates should be specified. Metal handles are undesirable for use in cold and hot climates.

l. In evaluating the finish to be applied to tools, the designer should consider that tools with a dull finish prevent reflected glare in areas of high illumination. However, dull-finished tools are often overlooked when closing assemblies, causing loss of tools and possible damage to the equipment. The designer should therefore consider the advantages and disadvantages of the type of finish in relation to the potential application of the tool.

Downloaded from http://www.everyspec.com

m. Specify the use of safe and ergonomic tools that can be used with minimal risk of injury and component damage.

A.4 DESIGN OF MECHANICAL EQUIPMENT

The following principles should be incorporated in the design of mechanical equipment:

a. Interchangeable fastening devices should be used, and the number of types and sizes of bolts, nuts, and screws should be kept to a minimum. Where practicable, lock washers should be attached to the bolts and screws.

b. Fast-acting fastening devices should be used for covers and cover plates that are of the captive type and do not require special tools.

c. Corrosion-resistant, sealed bearings should be used in all fire control materiel, except where the sleeve type has a logical application.

d. Wherever possible, self-aligning bearings should be used instead of ball caps and sockets in worm gear mechanisms.

e. Securing bearings by staking should be avoided; stakes have a tendency to break when in use for prolonged periods of time.

f. Dual doweling should be eliminated. Instead, eccentric dowels, dowels with stopscrews, with slots, with edge-locating shoulders, and with keys should be used.

g. Where possible, the use of split pins should be avoided; taper pins are more desirable.

h. Split clamp couplings should be used instead of pinned sleeves to facilitate the replacement of parts and adjustments.

i. Ferrous parts that are susceptible to corrosion and are used internally in instruments should be appropriately plated. Phosphate finishes (especially where not oiled) do not provide sufficient protection.

j. Oil-impregnated bearings should be used where practical.

k. Related subassemblies should be grouped together as much as possible.

l. A manual means for the engagement, disengagement, and locking of elevating and traversing mechanisms should be provided to facilitate maintenance.

m. In high-speed applications, it should be specified that mating gears be of materials having dissimilar wear characteristics.

n. Backlash and torque lash should be minimized. The effects of backlash and lost motion should be taken into consideration in the selection or design of movable parts.

o. The same type socket should be used on all socket set screws.

p. Screws, studs, and nuts made of corrosion-resistant material should be used where practicable.

q. Using dowel pins for the final positioning of mounts on support surfaces provided on the weapon system should be avoided; fixed locating points present a problem when mounts are interchanged. Consider key and keyway, eccentric and keyway, or single dowel pins for the final positioning of mounts.

r. Corrosion-resistant and environmentally-friendly materials should be used.

A.5 MOUNTING AND PACKAGING

The following principles should be incorporated in the mounting and packaging of assemblies, modules, and parts:

a. Provide adequate tool access and wrenching space around fasteners.

b. Provide adequate space for use of test probes and other service or test equipment.

c. Locate components to be serviced or repaired at the most favorable working level (between hip and shoulder level) position.

d. Ensure maintenance required on a given unit or component can be performed with the unit or component in place, where possible, and without disconnection, disassembly, or removal of other items.

Downloaded from http://www.everyspec.com

e. Ensure all replaceable items, particularly disposable modules, are removable without removal or disassembly of other items or units; by opening a minimum number of covers, cases, and panels, without hindrance from structural members or other parts; and along a straight or slightly curved line, rather than through an angle or more devious course.

f. Ensure all heavy, large, or awkward units are located so they may be slid out or pulled out rather than lifted out, do not prevent access to other removable items, and are mounted on sliding drawers and racks wherever practicable.

g. When it is necessary to place one unit behind or under another, ensure the unit requiring the most frequent maintenance is most accessible.

h. Ensure all chassis are completely removable from the enclosure with minimum effort and disassembly.

i. Ensure structural members of items, chassis, or enclosures do not prevent access to removable items, their connectors, or fasteners.

j. Ensure removal and replacement require minimum tools and equipment, and only common hand tools where practicable.

k. Ensure rapid and easy removal and replacement can be accomplished by one person, two persons, or handling equipment, in that order of preference.

l. Ensure irregular, fragile, or awkward extensions, such as cables and hoses, are easily removable before the unit is handled. Such protrusions are easily damaged by personnel and make handling difficult.

m. Ensure handling and carrying can be done efficiently by one person. Removable items should weigh less than 16.8 kilograms (37 pounds). Difficult to reach items should weigh less than 11.3 kilograms (25 pounds).

n. Ensure items over 16.8 kilograms (37 pounds) are designed for two-person handling.

o. Ensure hoist lugs are provided for assemblies over 40.8 kilograms (90 pounds).

A.6 ELECTRONIC MODULES

The following principles should be incorporated in the design of electronic modules:

a. Replaceable components should be designed so they cannot be installed in the wrong way. Also, if two parts are physically interchangeable, they should be functionally interchangeable. Designs, mockups, and manufacturing processes should be continually reviewed to identify and correct, or compensate for, all potential sources of such errors.

b. Tapered alignment pins, quick-disconnect fasteners, and other similar devices should be able to facilitate removal and replacement of components.

c. Mounting brackets and surfaces should be designed so that mounting bolts and fasteners can be placed on a surface adjacent to the technician's workspace. Guides and guide pins should be provided for alignment of units on mountings.

d. Where possible, units should be designed so they are removable along a straight, or slightly curved line, rather than through an angle.

e. Mounting brackets should be designed so that the component can be installed only in the correct position. Where space permits, side-alignment brackets which permit installation in only one position should be provided.

f. Bottom-mounted aligning pins should be used for components which are light enough to be lifted easily. Such aligning pins are not desirable for heavy components because they require a lifting process for aligning the component. Side-aligning devices are more desirable for heavy components because the component can be slid into place.

g. Symmetrical components should be coded, labeled, or keyed to indicate the proper orientation for mounting or installation.

h. Opening more than one access panel to remove any single unit should not be required.

i. Components should be positioned so that the technician does not have to reach too far for heavy units.

j. For components that are heavy or relatively inaccessible, slide-out racks should be provided. When using roll-out mounting racks, limit stops should be provided to prevent dropping the components.

Downloaded from http://www.everyspec.com

k. Units should be designed for easy connection to each other and to the housing in which they are installed.

l. Electronic and electrical units should be designed with plug-in rather than solder connections.

m. Incorrect assembly should be made difficult by using different sizes, or completely different types of connectors. Where incorrect assembly is possible, use coding techniques such as different color, size, and shape.

n. Connectors should be hand-manipulated, requiring no or only common hand tools; only a fraction of a turn or quick-snap action should be required.

o. Mounting bolts, screws, and fasteners that can be easily removed and replaced with minimum chance for error should be provided. Use captive bolts and nuts to prevent dropping small items into the equipment.

p. Small removable parts such as pins, caps, and covers should be attached to the main body of the equipment by small chains or other suitable means to prevent their loss. Because some retainers tend to break apart, especially when kinked, care should be exercised in the selection of suitable retainers to ensure that they meet performance requirements.

q. Lock washers or other restraining measures should be used to prevent bolts and nuts from vibrating loose. Safety wire is not generally recommended, but if it must be used, a simple means of attaching it should be provided.

r. The weight of components should be kept under 13.6 kilograms (30 pounds) where possible.

s. Adequate handles on all units weighing more than 4.5 kilograms (10 pounds) should be provided. Handles should be provided for units weighing less than 4.5 kilograms (10 pounds) if they might otherwise be difficult to grasp, remove, or hold.

A.7 STOWAGE OF EQUIPMENT

The following principles should be incorporated in the design of stowage equipment, areas, and boxes:

a. Stowed items should be secured by straps, brackets, or other restraining devices to provide for cross-country operation.

b. All stowage locations should be designed to drain adequately when the vehicle is on level ground. Drain holes should be arranged so that they will not be blocked by normal stowage.

c. Items which are flammable or subject to damage by leakage of lubricants, fuels, or water should be stowed in a manner to protect them, as well as operators and maintainers, from engines, generators, and exhaust components.

d. To prevent its loss, peculiar equipment should be designed to be properly secured when installed or stowed.

e. Items of mission-critical nature should be stowed in a manner to permit rapid access by crewmembers.

f. Consider all environments in which the crew will operate when locating and designing stowage space for items worn by crewmembers.

g. Unless access covers or doors are intended to be removable, they should be designed so they can be retained open.

h. Instructions about contents in a box should be located so they can be read when the door is open.

i. Required access should be provided to the rear of sliding, rotating, or hinged units so they open or rotate their full distance freely and remain “open” by themselves.

j. Openings of covers or doors should be designed to be obvious or have opening instructions affixed to the outside.

k. When a cover or door is in place, but not secured, it should be visually obvious.

l. Sharp edges and corners on doors, covers, and other exposed surfaces should be rounded.

m. To simplify reinstalling removable inspection access doors, they should be interchangeable or of the size and shape which will make their proper position obvious.

n. Obstructions (material or structural members) should never block covers or doors so they cannot be opened or removed, or restrict the required access through the cover or door opening.

o. If covers are hinged, space equal to the sweep volume of the cover should be allowed so the body frame and brackets will not obstruct its opening.

Downloaded from http://www.everyspec.com

p. Items should be capable of being stowed and unstowed by the 90 percent central accommodation of the user population while wearing cold-weather gear and gloves or while wearing all levels of MOPP gear without having to assume a strenuous or difficult position.

A.8 COVERS

Covers should be used in the following order of preference:

a. Hinged doors, hoods, and caps. Hinged doors, hoods, and caps allow fastest and easiest access, with relatively few fasteners, and the cover is supported so the technician does not have to handle it. However, these covers do require swinging space, which may interfere with other operations or components. Where swinging or opening space is limited, double-hinged split doors should be used. Hinges should be placed at the bottom of the door, or a prop, catch, or latch should be provided to hold the door open, particularly if the door must be opened in high winds.

b. Sliding doors and caps. Sliding doors or caps are particularly useful where swinging space is limited. Small sliding caps are useful for small accesses that do not require a tight seal. When using sliding doors and caps, they should lock positively, be designed so they will not jam or stick, and be easy to use. Personnel should be able to use them without tools. Opening or closing them should not interfere with, damage, or make potentially harmful contact with wires or other equipment items.

c. Removable doors, plates, and caps. Removable doors, plates, or caps require little space for opening and, once removed, do not interfere with workspace. However, handling them takes time and effort. When using removable covers, tongue-and-slot or similar catches should be used wherever possible for small plates, doors, and caps, to minimize the number of fasteners required. If small plates and caps are likely to be misplaced or damaged, secure them with retainer chains. If a removable plate must be attached in a certain way, it should be designed so it cannot be attached improperly.

d. Removable panels or sections. Removable panels or sections give access to whole sides of equipment. They discourage non-maintenance personnel from opening the access. They do not require “swinging space”, but they are easily damaged and awkward to handle. They may also interfere with maintenance. When used, panels that must be removed for maintenance should be held with a minimum of combination-head, captive fasteners. Spring-loaded, quarter-turn fasteners are particularly recommended, and it should be apparent when fasteners have been released. Panels and sections should be designed so one person can carry them and install or remove them with common hand tools, and should have handles to facilitate removal, handling, and replacement. It should not be necessary to disconnect wires or components from a panel before removing it. If such items are attached to the panel, it should be hinged so they need not be removed.

A.9 FASTENERS

Fasteners should be used in the following order of preference:

a. Quick-connect and quick-disconnect devices. These devices are fast and easy to use, do not require tools, may be operated with one hand, and are very good for securing plug-in components, small components, and covers. However, their holding power is low, and they cannot be used where a smooth surface is required. The factors listed below should be considered in selecting quick-connect and quick-disconnect fasteners.

(1) These fasteners should be used wherever possible when components must be dismantled or removed frequently.

(2) These fasteners should fasten and release easily, without requiring tools.

(3) They should fasten or unfasten with a single motion of the hand.

(4) It should be obvious when they are not correctly engaged.

(5) When there are many of these fasteners, prevent misconnections by giving the female section a color or shape code, location, or size so it will be attached only to the correct male section.

(6) Whenever possible, design equipment with fasteners that require a minimum of repetitive motion for removal and installation.

b. Latches and catches. These items are very fast and easy to use, do not require tools, and have good holding power; they are especially good for large units, panels, covers, and cases. They cannot be used where a smooth surface is required. The factors listed below should be considered in selecting latches and catches:

Downloaded from http://www.everyspec.com

(1) Long-latch catches should be used to minimize inadvertent releasing of the latch.

(2) Catches should be spring-loaded so they lock on contact rather than requiring positive locking.

(3) If the latch has a handle, the latch release should be located on, or near, the handle so it can be operated with one hand.

(4) Latches and catches should be evaluated for snap down and release forces that could be hazardous to handle during operation.

c. Captive fasteners. Captive fasteners are slower and more difficult to use, depending upon type, and usually require using common hand tools, but they stay in place, saving time that would otherwise be wasted handling and looking for bolts and screws, and can be operated with one hand. The factors listed below should be considered in selecting captive fasteners:

(1) Captive fasteners should be used when "lost" screws, bolts, or nuts might cause a malfunction or excessive maintenance time.

(2) Fasteners should be used which can be operated by hand or with a common hand tool and which can be replaced easily if they are damaged.

(3) Captive fasteners of the quarter-turn type should be self-locking and spring-loaded.

d. Regular screws. Round, square, or flat-head screws take longer to use and are subject to loss, damage, stripping, and misapplication. Square-head or hexagonal-head screws are generally preferable to round or flat ones; they provide better tool contact, have sturdier slots, and can be removed with wrenches. If personnel must drive screws blindly, provide a guide in the assembly to help keep the screwdriver positioned properly. Screw heads should have deep slots that will resist damage, and should be used only when personnel can use screwdrivers in a "straight-in" fashion. Personnel should not be required to use offset screwdrivers.

e. Bolts and nuts. Bolts are usually slow and difficult to use. Personnel must have access to both ends of the bolt, use both hands, and often use two tools. Also, starting nuts require precise movements. There are many loose parts to handle and lose such as nuts and washers. Design considerations should include keeping bolts as short as possible, so they will not snag personnel or equipment. Coarse threads are preferable to fine threads for low torques and reduce the possibility of cross-threading. Left-hand threads should be avoided unless system requirements demand them. If used, both bolts and nuts should be identified by clearly marking, or shape or color-coding. Whenever possible to minimize the number of tools required for assembly and disassembly, provide a universal size of bolts and nuts for all assemblies. Wing nuts (preferably) or knurled nuts should be used for low-torque applications, because they do not require tools.

f. Combination-head bolts and screws. Combination-head bolts and screws are preferable to other screws or bolts because they can be operated with either a wrench or a screwdriver, and there is less danger of damaged slots and stuck fasteners. In general, slotted hexagon heads are preferable to slotted knurled heads.

g. Internal-wrenching screws and bolts. Internal-wrenching screws and bolts (socket heads) allow higher torque, better tool grip, and less wrenching space, but require special tools, are easily damaged, and are difficult to remove if damaged. They also become filled with ice and frozen mud. The number of different sizes should be limited to minimize the number of special tools; one size is preferred. Fasteners with deep slots should be selected to reduce the danger of damaged fasteners.

h. Rivets. Rivets are very hard and time-consuming to remove. They should not be used on any part which may require removal.

i. Cotter key. Keys and pins should fit snugly, but they should not have to be driven in or out. Cotter keys should have large heads for easy removal.

j. Safety wire. Use safety wire, or alternative safety cable, only where self-locking fasteners cannot withstand the expected vibration or stress. Attach safety wire or safety cable so it is easy to remove and replace.

k. Retainer ring. Rings which become difficult to remove and replace when they are worn should be avoided. Rings which hold with a positive snap action should be used when possible.

Downloaded from http://www.everyspec.com

l. Retainer chains. The selection of retainer chains for use in design should consider link, sash, or woven-mesh chains. Bead-link chain should be avoided because it breaks more easily than other types. Chains should be attached with screws or bolts; attach them strongly and positively, but so they can be disconnected easily when required. Eyelets should be provided at both ends of the chain for attaching to the fasteners and chains should not be longer than their function requires. Retainer chains should be used for the following purposes:

(1) Keep hatches or doors from opening too far and springing their hinges.

(2) Turn doors or covers into useful shelves for the technician.

(3) Prevent small covers, plates, or caps from being misplaced.

(4) Secure small, special tools where they will be used.

(5) Secure objects which might otherwise fall and injure personnel.

(6) Secure removable pins to prevent loss.

A.10 CONDUCTORS

The following principles should be incorporated in the selection, design, marking, bounding, routing, and installation of lines and cables:

a. Route cables so that they are not pinched by doors, lids, and slides, are not walked on or used for handholds, and are accessible to the technician, by not being under floorboards, behind panels, or components that are difficult to remove, or routed through congested areas, and need not be bent or unbent sharply when connected or disconnected.

b. Design cables or lines which must be routed through walls or bulkheads for easy installation and removal without the necessity for cutting or compromising the integrity of the system.

c. Cable routing should avoid close contact with tubes, transformers, or rectifiers so that they will not be damaged by overheating.

d. Provide guards or other protection for easily damaged conductors such as waveguides, high-frequency cables, or insulated high-voltage cables.

e. Protect electrical wiring from contact with fluids such as grease, oil, fuel, hydraulic fluid, water, or cleaning solvents. These may damage insulation and result in injury to personnel.

f. Provide a means for keeping cables and lines off the ground. While permanent lines should never be on the ground, keeping them clear is especially important in areas where ice and snow may cover the lines for long periods, making them inaccessible for maintenance.

g. Where cable connections are maintained between stationary equipment and sliding chassis or hinged doors, provide service loops to permit movement, such as pulling out a drawer for maintenance without breaking the electrical connection. The service loop should have a return feature to prevent interference when removable chassis are replaced in the cabinet.

h. Provide storage space for long electrical cables which are a part of ground power, service, and test equipment. Often a storage compartment is present, but no easy means is provided for coiling the wire into a shape and size which will permit storage. A simple means is a cable winder, a device around which the cable may be wrapped. Use a circular spool as a cable winder to prevent bending radii of less than six times the diameter of the cable.

i. Precautions should be taken to protect the insulation at the ends of cables from moisture. Moisture-proof jacketing, which will withstand the required temperature range and mechanical abuse, should be used.

j. Provide protective covers for the cable to prevent damage to connectors during periods of non-use. Provisions should be made to secure the protective cover to the cable to avoid misplacement.

A.11 TEST AND SERVICE POINTS

The following principles should be incorporated in the design and location of test points:

a. Test and service points should be designed and located:

(1) According to the frequency and time requirements of use.

Downloaded from http://www.everyspec.com

(2) To be clearly distinguishable from each other; where necessary use color-coding and labeling.

(3) So they offer positive indication, by calibration, labeling, or other features, of the direction, degree, and effect of the adjustment.

(4) At a central panel or location, or at a series of functionally autonomous panels and locations.

(5) With lead tubes, wires, or extended fittings to bring hard-to-reach test and service points to an accessible area.

(6) To overcome accessibility deficiencies resulting from critical lead lengths and similar constraints.

(7) So they are not concealed or obstructed by the hull, turret, brackets, or other items.

b. Templates or overlays should be provided where they will expedite the use of different test procedures which use the same set of test points.

c. The maximum use of color codes, guidelines, symbols, and labels should be made to facilitate following logical test routines among the test points.

d. Distinctively different connectors or fittings should be provided for each type of test or service equipment, probe, grease, or oil to minimize the likelihood of error or misuse.

e. Requirements for separate funnels, strainers, adaptors, and other accessories should be avoided. Where practical, these should be built into the equipment or service equipment, so they need not be handled separately.

f. Test points should be combined, where feasible, into clusters for multi-pronged connectors, particularly where similar clusters occur frequently.

g. Lubrication points should be provided to avoid disassembly of equipment; but if such points are not feasible, easy access should be provided for direct lubrication.

A.12 TEST EQUIPMENT

The following should be incorporated into test equipment:

a. The following principles should be incorporated in the design of test equipment:

(1) Equipment should be made simple to operate and provide self-checking calibration features.

(2) Test equipment should be designed for one-person operation.

(3) A simple method to calibrate test equipment should be provided. Equipment should be equipped with a go/no-go indicator or simple check to determine whether the tester is malfunctioning or needs calibration.

(4) A warm-up indicator should be provided if applicable. Required warm-up time should be indicated clearly near the warm-up switch if no visual signal is provided. Warm-up procedures should be explicit.

(5) A simple check should be incorporated into the tester for testing the accuracy of the results.

(6) Conversion tables should be provided when needed.

(7) Attached instructions that clearly indicate the purpose of the tester and special caution for its use should be provided.

(8) Set-up procedures should be provided on an instruction card attached to the equipment.

(9) Tests necessitating quantitative readings and adjustments by operating personnel should be avoided. Information should be furnished by qualitative, positive signaling devices, such as color-coded signals and zero-center meters, or similar means of indication.

(10) Equipment should be designed either to prevent the user from making errors or to warn the user of errors.

(11) Components or equipment should be clearly labeled as to whether it is to be used with alternating or direct current.

(12) Circuit breakers should be provided on all testers to safeguard against damage if the wrong switch or jack position is used.

(13) Fail-safe features should be incorporated into the equipment to minimize the danger to user or equipment should failure occur.

Downloaded from http://www.everyspec.com

(14) Regularly stocked standard components and units should be specified.

(15) If components are physically interchangeable, they also should be functionally interchangeable.

(16) Test equipment should be designed to be as rugged as the conditions of its use; that is, equipment to be used in the field should be more rugged than that built for laboratory use.

(17) Controls, dials, and adjustments should be designed to prevent misalignment caused by vibration, service use, or accidental contact.

(18) Safeguards against equipment damage from inadvertent human error should be provided.

(19) Equipment should be provided with devices to ensure that it is turned off when testing is completed.

(20) Power switches should be provided to shut off automatically when the tester lid is closed.

(21) A device to indicate that power is on should be included on the tester panel.

(22) Controls should be designed to prevent equipment damage if it is operated at the wrong time or in the wrong manner.

(23) Delicate components should be located where they will not be damaged while the unit is being operated.

b. The following principles should be incorporated in the design of portable and hand-held test equipment:

(1) Portable test equipment may be necessary when the number, or complexity, of functions to be tested would make hand-held testers too heavy or bulky.

(2) Portable test equipment may be necessary when a number of pieces of equipment must be tested and are physically separated.

(3) Portable test equipment may be necessary when the equipment to be tested will not be located at a permanent testing installation.

(4) Portable test equipment should be of the smallest size possible, not to exceed a medium size and weight, and be approximately cubic in shape.

(5) Rectangular or square shapes are recommended for easy storage. If possible, their dimensions should fit relay racks for transportation in shop vans in the field.

(6) Storage space for test equipment instructions should be provided on, or within, the test equipment.

(7) Weight tested and calibrated hooks or other devices should be provided on the tester, or on the prime equipment, to attach the tester to the equipment during the test.

(8) An adjustable, and weight tested and calibrated, harness or sling should be provided to facilitate carrying test equipment.

(9) If the test equipment has a removable cover, handles or grips should be provided on the sides of the test equipment for carrying it when the cover is not attached.

(10) Hinged, permanently attached covers are recommended. If the test equipment must have a removable cover, it should be labeled with the same identification as the test equipment.

(11) Tester connectors should be clearly labeled with the type of electrical source that should be used.

(12) Panel lighting should be provided so the tester can be used under conditions of low or high illumination.

(13) Stationary stands that can be converted to a mobile stand should be provided, on which the test equipment can be placed while being used.

(14) Hand-held testers should be used for making measurements at fairly inaccessible locations.

(15) Hand-held testers should be small, lightweight, and conveniently shaped.

(16) Hand-held testers should not weigh more than 2.3 kilograms (5 pounds) and should be capable of being held and operated with the same hand.

(17) The hand-held tester should have a grip on the underside through which the hand can be inserted. This grip will reduce the probability of dropping the tester and will eliminate the necessity of holding the tester with both hands.

Downloaded from http://www.everyspec.com

(18) The underside of the tester should be serrated or ridged to prevent it from slipping out of the user's hand.

(19) The tester should be equipped with a string or strap so the user can place it around his or her neck when it is not in use; the tester can then stand free and leave both hands free for other tasks. A means should also be provided to clip or attach the tester to the user's body or clothing to prevent the tester from swinging into other equipment or interfering with accomplishment of other tasks when not in use.

(20) Hand-held testers should be as functionally simple as possible.

(21) The tester should be self-powered and not require attachment to an electrical outlet.

(22) The indicator on the tester should be of the simple go/no-go type with a light to indicate out-of-tolerance conditions. If a meter is necessary, tolerance zones should be color coded.

A.13 BATTERIES

The following principles should be incorporated in the use of batteries:

a. Batteries should be installed in locations away from sources of heat and be protected in such a manner as to ensure satisfactory functioning within the maximum and minimum operating ambient-air temperature limits.

b. Battery holders should be rugged and have easily operated clamping devices, not requiring the use of tools, to hold the battery firmly in position against all vibrations, motions, and shocks (such as from gunfire).

c. One person should be capable of rapidly and easily removing batteries for servicing and replacement without removing other items of equipment, and without using special tools.

d. Complete freedom of access should be provided for replenishing the electrolyte and testing the specific gravity and voltage. Loose filler caps should be avoided whenever possible.

e. Dust caps should be provided so battery terminals cannot contact metal surfaces during handling, removal, or replacement.

f. Battery supports, hold-downs, and areas around the installation, which could possibly be affected by dripping or seepage of acids, should be protected with acid-proof paints or coatings. Battery cases should be drained overboard, using acid-proof piping, when required, to a contained area to prevent environmental exposure.

g. Batteries should be located in well ventilated areas and have facilities to prevent freezing, when necessary.

h. Batteries should not be charged in a poorly ventilated compartment where explosive mixtures of hydrogen and air may result.

i. Batteries should have special filler caps and palladium catalysts to reconvert hydrogen and oxygen into water, thus reducing noxious fumes in the battery area.

j. To prevent gas explosions, only electrical fixtures approved for hazardous locations should be used in battery compartments.

k. Quick-disconnects should be provided on battery leads for power-off maintenance or emergencies.

l. Labeling should be provided as necessary to identify the battery type, voltage, polarity, and safe rate of charge. All related terminals, connectors, contacts, and leads that are part of the battery circuit should be identified. When practical, a block or pictorial wiring diagram of the battery circuit should also be provided.

m. Batteries with “dry” electrolytes should be installed according to the preceding criteria when they apply, except that certain types of dry batteries may be installed in sealed containers without ventilation. Dry electrolytic batteries should be mounted in housings which will keep them dry from water, moisture, and contaminants. “Plug-in” designs installed without tools or loose parts should be used wherever possible.

Downloaded from http://www.everyspec.com

ANTHROPOMETRIC REFERENCE VALUES

B.1 SCOPE

B.1.1 Scope. This appendix provides the anthropometric values referenced in various sections of this document. The appendix is a mandatory part of the standard. The information contained herein is intended for compliance.

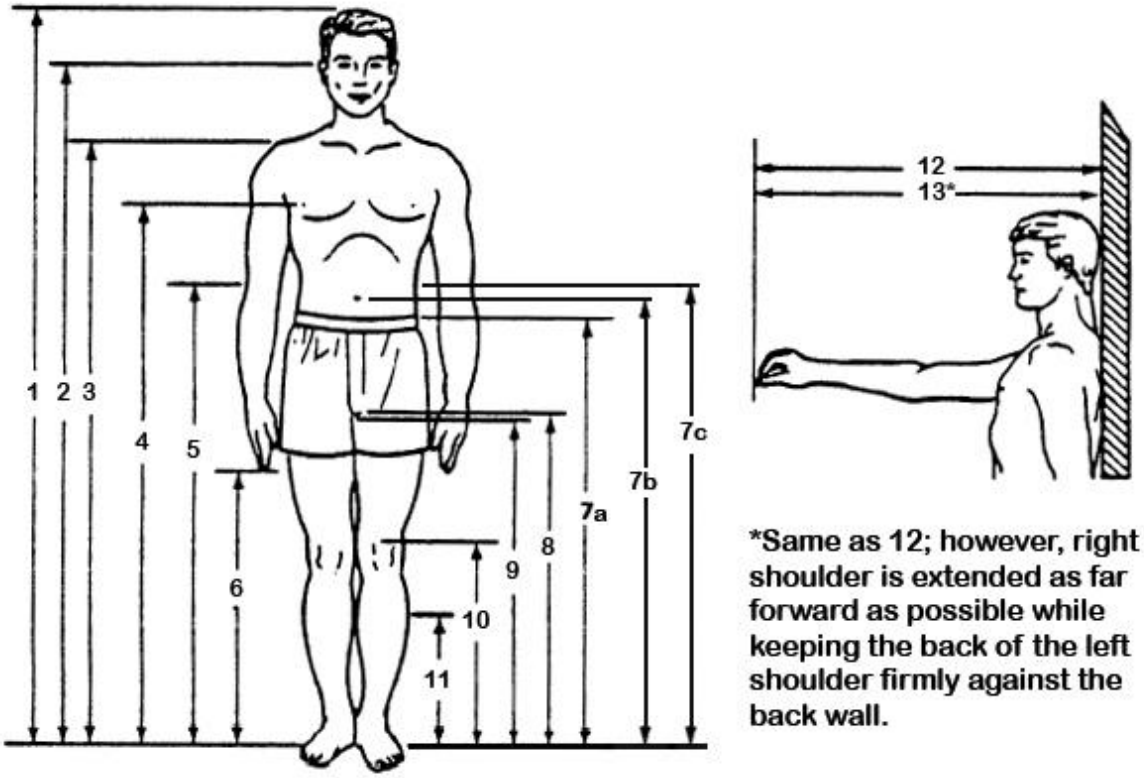

FIGURE B-1. Standing body dimensions.

Downloaded from http://www.everyspec.com

TABLE B-I. Standing body dimensions – general forces.

	Percentile values in cm (in)			
	5th percentile		95th percentile	
	Male	**Female**	**Male**	**Female**
Weight, kg (lbs)	65.3 (143.7)	52.6 (115.8)	97.2 (213.8)	80.7 (177.6)
1. Stature	166.3 (65.5)	161.2 (63.5)	187.8 (73.9)	176 (69.3)
2. Eye height (standing)	154.5 (60.8)	150.1 (59.1)	175.6 (69.1)	164.2 (64.6)
3. Shoulder (acromiale) height	135.9 (53.5)	123 (48.4)	155.3 (61.2)	144.6 (56.9)
4. Chest (nipple) height [1/]	119.5 (47.1)	115 (45.2)	136.9 (53.9)	128.3 (50.5)
5. Elbow (radiale) height	100.8 (39.7)	97.5 (38.4)	116 (45.7)	108.8 (42.8)
6. Fingertip (dactylion) height	59.1 (23.3)	55.1 (21.7)	72.4 (28.5)	67 (26.4)
7a. Waist (iliocristale) height	99.8 (39.3)	91.1 (35.9)	116.1 (45.7)	107.1 (42.2)
7b. Waist (omphalion) height	97.7 (38.5)	90.3 (35.6)	114.7 (45.1)	107.1 (42.2)
7c. Waist (natural indentation) height	105.2 (41.4)	103.1 (40.6)	121.2 (47.7)	114.3 (45)
8. Crotch height	77.5 (30.5)	68.1 (26.8)	91.5 (36)	84.6 (33.3)
9. Gluteal furrow height	74.9 (29.5)	66.4 (26.1)	88.5 (34.8)	81.7 (32.2)
10. Knee (mid-patella) height	46.4 (18.2)	44.7 (17.6)	54.7 (21.5)	50.2 (19.8)
11. Calf height	32 (12.6)	27.8 (10.9)	38.4 (15.1)	35.7 (14.1)
12. Functional (thumbtip) reach	71.7 (28.2)	67.7 (26.7)	88.6 (34.9)	80.5 (31.7)
13. Functional reach, extended	80.5 (31.7)	73.5 (28.9)	94.2 (37.1)	92.3 (36.3)

NOTE:
[1/] Bustpoint height for women.

Downloaded from http://www.everyspec.com

TABLE B-II. Standing body dimensions – Army air crew.

	Percentile values in cm (in)			
	5th percentile		95th percentile	
	Male	Female	Male	Female
Weight, kg (lbs)	65.3(143.7)	52.6 (115.8)	97.2 (213.8)	80.7 (177.6)
1. Stature	166.3 (65.5)	161.2 (63.5)	187.8 (73.9)	176 (69.3)
2. Eye height (standing)	154.5 (60.8)	150.1 (59.1)	175.6 (69.1)	164.2 (64.6)
3. Shoulder (acromiale) height	135.8 (53.5)	131.3 (51.7)	155.3 (61.2)	144.6 (56.9)
4. Chest (nipple) height [1/]	119.5 (47.1)	115 (45.3)	136.9 (53.9)	128.3 (50.5)
5. Elbow (radiale) height	100.8 (39.7)	97.5 (38.4)	116 (45.7)	108.8 (42.8)
6. Fingertip (dactylion) height	60.2 (23.7)	58.3 (23)	72 (28.3)	68.7 (27)
7a. Waist (iliocristale) height	99.8 (39.3)	97.5 (38.4)	116.1 (45.7)	107.7 (42.4)
7b. Waist (omphalion) height	98.6 (38.8)	96.3 (37.9)	114.7 (45.1)	107.1 (42.2)
7c. Waist (natural indentation) height	105.2 (41.4)	103.1 (40.6)	121.2 (47.7)	115.5 (45.5)
8. Crotch height	77.5 (30.5)	75.5 (29.7)	91.5 (36)	83.9 (33)
9. Gluteal furrow height	74.9 (29.5)	72.5 (28.5)	88.5 (34.8)	81.7 (32.2)
10. Knee (mid-patella) height	46.4 (18.3)	44.7 (17.6)	54.7 (21.5)	50.2 (19.7)
11. Calf height	32 (12.6)	29.3 (11.5)	38.4 (15.1)	35.1 (13.8)
12. Functional (thumbtip) reach	74 (29.1)	71.1 (28)	86.3 (34)	79.7 (31.4)
13. Functional reach, extended	80.2 (31.6)	77.4 (30.5)	92.8 (36.6)	86 (33.9)

NOTE:
[1/] Bustpoint height for women.

Downloaded from http://www.everyspec.com

TABLE B-III. Standing body dimensions – Air Force pilots.

	Percentile values in cm (in)			
	5th percentile		95th percentile	
	Male	Female	Male	Female
Weight, kg (lbs)	64.89 (143.3)	52.83 (116.5)	107.12 (23.2)	81.21 (179.1)
1. Stature	168.1 (66.1)	160.1 (62.9)	190.1 (74.7)	174.4 (68.5)
2. Eye height (standing)	N/A	N/A	N/A	N/A
3. Shoulder (acromiale) height	135.7 (53.4)	131.6 (51.8)	154.8 (60.9)	143.9 (56.7)
4. Chest (nipple) height [1/]	120.8 (47.6)	117.5 (46.3)	138.1 (54.4)	130.4 (51.3)
5. Elbow (radiale) height	104.8 (41.3)	N/A	120 (47.2)	N/A
6. Fingertip (dactylion) height	61.5 (24.2)	N/A	73.2 (28.8)	N/A
7a. Waist (iliocristale) height	101.3 (39.9)	N/A	117.2 (46.1)	N/A
7b. Waist (omphalion) height	99.9 (39.3)	95.7 (37.6)	116.1 (45.6)	107.2 (42.1)
7c. Waist (natural indentation) height	106 (41.7)	102.4 (40.2)	121.9 (47.9)	113 (44.4)
8. Crotch height	71.5 (28.1)	71.7 (28.2)	87.3 (34.3)	80.8 (31.8)
9. Gluteal furrow height	74.6 (29.4)	70.4 (27.7)	87.9 (34.6)	81.5 (32.1)
10. Knee (mid-patella) height	45.7 (18)	N/A	53.9 (21.2)	N/A
11. Calf height	32 (12.6)	N/A	39.3 (15.5)	N/A
12. Functional (thumbtip) reach	74.83 (29.4)	69.9 (27.5)	87.3 (34.3)	80.3 (31.6)
13. Functional reach, extended	82.3 (32.4)	79.8 (31.4)	97.3 (38.3)	94 (37.0)

FOOTNOTE:

[1/] Bustpoint height for women.

NOTE:

1. N/A = Not available.

Downloaded from http://www.everyspec.com

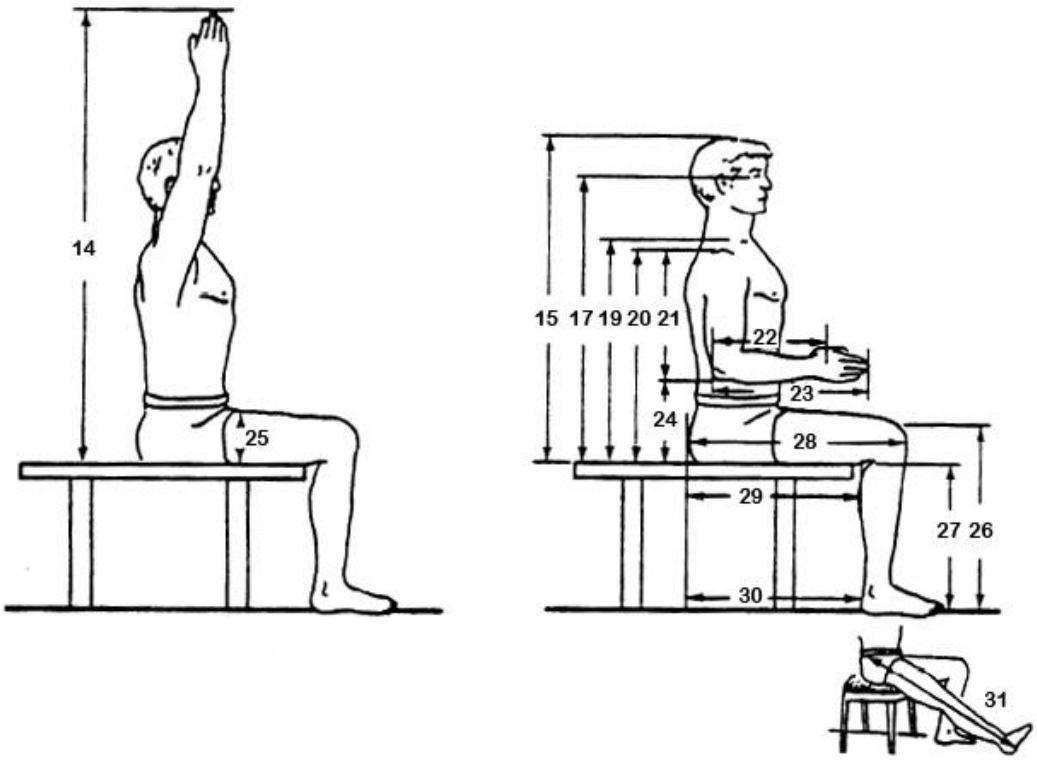

NOTES:

1. Dimension 16 – not used.
2. Dimension 30 – not used.

FIGURE B-2. Seated body dimensions.

Downloaded from http://www.everyspec.com

TABLE B-IV. Seated body dimensions – general forces.

	Percentile values in cm (in)			
	5th percentile		95th percentile	
	Male	Female	Male	Female
14. Vertical arm reach, sitting	133.4 (52.5)	128.8 (50.7)	152.1 (59.9)	142.4 (56.1)
15. Sitting height, erect	87.2 (34.3)	83.6 (32.9)	97.2 (38.3)	91 (35.8)
17. Eye height sitting, erect	75.5 (29.7)	72.3 (28.5)	86.2 (34)	81.2 (32)
19. Mid-shoulder height	59.6 (23.5)	56.8 (22.4)	68.6 (27)	64.3 (25.3)
20. Shoulder height, sitting	54.9 (21.6)	50.9 (20)	64.6 (25.4)	60.4 (23.8)
21. Shoulder-elbow length	34.4 (13.5)	32.9 (13)	40.1 (15.8)	36.8 (14.5)
22. Elbow-grip length	33.2 (13.1)	30 (11.8)	39.1 (15.4)	35.8 (14.1)
23. Elbow-fingertip length	44.4 (17.5)	40.6 (16)	52.4 (20.6)	48.3 (19)
24. Elbow rest height	28.2 (11.1)	19.5 (7.7)	20.1 (7.9)	26.9 (10.6)
25. Thigh clearance height	15 (5.9)	14.1 (5.5)	18.6 (7.3)	18.2 (7.2)
26. Knee height, sitting	51.9 (20.4)	50.3 (19.8)	60.4 (23.8)	55.9 (22)
27. Popliteal height	39.7 (15.6)	37.6 (14.8)	47.3 (18.6)	42.9 (16.9)
28. Buttock-knee length	57.8 (22.8)	56.8 (22.4)	66.5 (26.2)	63.8 (25)
29. Buttock-popliteal length	46.5 (18.3)	46.3 (18.2)	54.7 (21.5)	52.4 (20.6)
31. Functional leg length	101.2 (39.8)	99 (39)	116.8 (46)	109.7 (43.2)

NOTE:
1. N/A = not available.

Downloaded from http://www.everyspec.com

TABLE B-V. Seated body dimensions – Army air crew.

	Percentile values in cm (in)			
	5th percentile		95th percentile	
	Male	Female	Male	Female
14. Vertical arm reach, sitting	133.4 (52.5)	128.8 (50.7)	152.1 (59.9)	142.4 (56.1)
15. Sitting height, erect	87.2 (34.3)	83.6 (32.9)	98.1 (38.6)	92.7 (36.5)
17. Eye height sitting, erect	75.5 (29.7)	72.3 (28.5)	56.2 (34)	81.2 (32)
19. Mid-shoulder height	59.6 (23.5)	56.8 (22.4)	68.6 (27)	64.3 (25.3)
20. Shoulder height, sitting	56.4 (22.2)	54.1 (21.3)	65.6 (25.8)	61.9 (24.4)
21. Shoulder-elbow length	34.4 (13.5)	32.9 (13)	40.1 (15.8)	36.8 (14.5)
22. Elbow-grip length	33.3 (13.1)	31.6 (12.4)	38.5 (15.2)	35.5 (14)
23. Elbow-fingertip length	45.1 (17.8)	43.1 (17)	51.8 (20.4)	47.6 (18.7)
24. Elbow rest height	28.2 (11.1)	19.5 (7.7)	20.1 (7.9)	26.9 (10.6)
25. Thigh clearance height	15 (5.9)	14.1 (5.5)	18.6 (7.3)	18.2 (7.2)
26. Knee height, sitting	51.9 (20.4)	50.3 (19.8)	60.4 (23.8)	55.9 (22)
27. Popliteal height	39.7 (15.6)	37.6 (14.8)	47.3 (18.6)	42.9 (16.9)
28. Buttock-knee length	57.8 (22.8)	56.8 (22.4)	66.5 (26.2)	63.8 (25)
29. Buttock-popliteal length	46.5 (18.3)	46.3 (18.2)	54.7 (21.5)	52.4 (20.6)
31. Functional leg length	101.2 (39.8)	99 (39)	116.8 (46)	109.7 (43.2)

Downloaded from http://www.everyspec.com

TABLE B-VI. Seated body dimensions – Air Force pilots.

	Percentile values in cm (in)			
	5th percentile		95th percentile	
	Male	Female	Male	Female
14. Vertical arm reach, sitting	N/A	N/A	N/A	N/A
15. Sitting height, erect	87.5 (34.4)	84.4 (33.2)	99.2 (39)	92.5 (36.4)
17. Eye height sitting, erect	77.1 (30.3)	73.6 (28.9)	73.6 (28.9)	81.7 (32.1)
19. Mid-shoulder height	60.2 (23.7)	57.5 (22.6)	69.2 (27.2)	63.7 (25.1)
20. Shoulder height, sitting	56.4 (22.2)	54.1 (21.3)	66.1 (26)	63 (24.8)
21. Shoulder-elbow length	33.2 (13.1)	N/A	38.8 (15.3)	N/A
22. Elbow-grip length	32.6 (12.8)	N/A	37.9 (14.9)	N/A
23. Elbow-fingertip length	N/A	N/A	N/A	N/A
24. Elbow rest height	20.9 (8.2)	20.3 (8)	29.5 (11.6)	27.8 (10.9)
25. Thigh clearance height	15.1 (5.9)	14.5 (5.7)	20 (7.9)	18.9 (7.4)
26. Knee height, sitting	51.8 (20.4)	49.4 (19.4)	60.9 (23.9)	55.4 (21.8)
27. Popliteal height	38.5 (15.1)	35.9 (14.1)	46.3 (18.2)	41.3 (16.2)
28. Buttock-knee length	57.4 (22.6)	55.8 (21.9)	66.2 (26)	61.7 (24.2)
29. Buttock-popliteal length	45.2 (17.8)	44.1 (17.3)	53 (20.8)	49.9 (19.6)
31. Functional leg length	N/A	N/A	N/A	N/A

NOTE:
1. N/A = not available.

Downloaded from http://www.everyspec.com

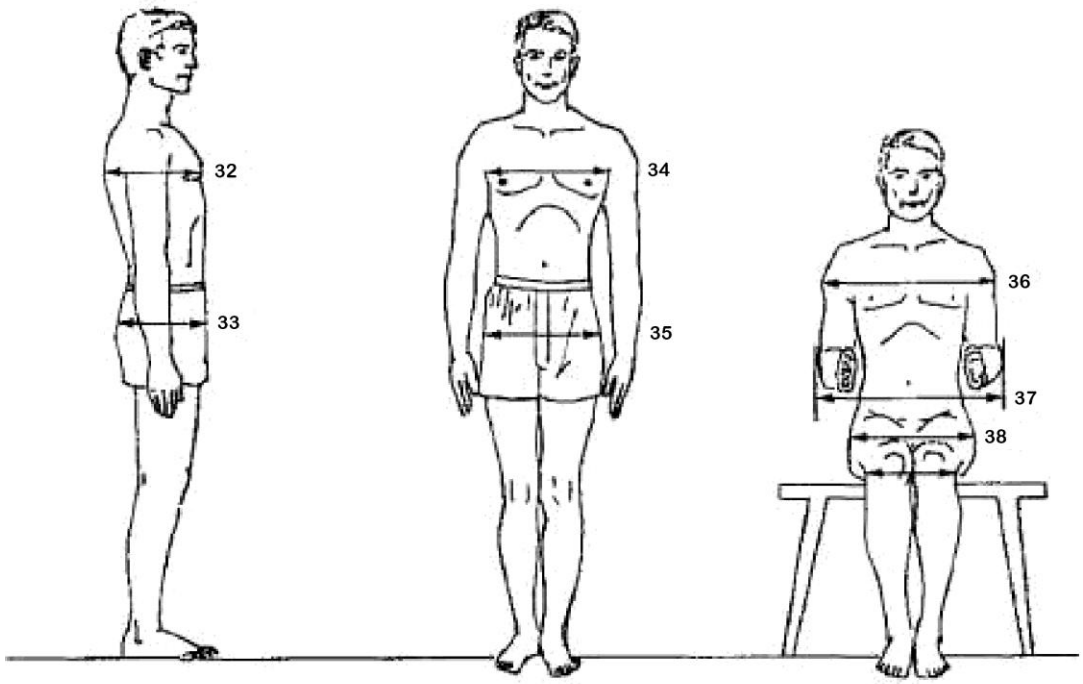

FIGURE B-3. Depth and breadth dimensions.

TABLE B-VII. Depth and breadth dimensions – general forces.

	Percentile values in cm (in)			
	5th percentile		95th percentile	
	Male	Female	Male	Female
32. Chest depth [1/]	21.9 (8.6)	20.9 (8.2)	28.3 (11.1)	28.3 (11.1)
33. Buttock depth	21.8 (8.6)	19.6 (7.7)	27.8 (11)	27.3 (10.7)
34. Chest breadth	27.8 (10.9)	25 (9.8)	36.9 (14.5)	32.1 (12.6)
35. Hip breadth, standing	32 (12.6)	32 (12.6)	38.3 (15.1)	38.8 (15.3)
36. Shoulder (bideltoid) breadth	41.8 (16.5)	38.2 (15)	53.5 (21.1)	47.2 (18.6)
37. Forearm-forearm breadth	49.1 (19.3)	41.5 (16.3)	62 (24.2)	54.3 (21.4)
38. Hip breadth, sitting	31.1 (12.2)	33.8 (13.3)	40.9 (16.1)	43.3 (17)

NOTE:
[1/] Bust depth for women.

Downloaded from http://www.everyspec.com

TABLE B-VIII. Depth and breadth dimensions – Army air crew.

	Percentile values in cm (in)			
	5th percentile		95th percentile	
	Male	Female	Male	Female
32. Chest depth [1/]	21.9 (8.6)	20.7 (8.1)	28.3 (11.1)	28.3 (11.1)
33. Buttock depth	21.8 (8.6)	19.6 (32.9)	27.8 (11)	27.3 (10.7)
34. Chest breadth	29.7 (11.7)	25.7 (10.1)	36.8 (14.5)	32.1 (12.6)
35. Hip breadth, standing	32 (12.6)	32 (12.6)	38 (15)	39.2 (15.4)
36. Shoulder (bideltoid) breadth	46 (18.1)	40.3 (15.9)	53.4 (21)	47.6 (18.7)
37. Forearm-forearm breadth	49.1 (19.3)	42.4 (16.7)	62 (24.2)	54.3 (21.4)
38. Hip breadth, sitting	33.8 (13.3)	35.5 (14)	40.9 (16.1)	44.6 (17.6)

NOTE:
[1/] Bust depth for women.

TABLE B-IX. Depth and breadth dimensions – Air force pilots.

	Percentile values in cm (in)			
	5th percentile		95th percentile	
	Male	Female	Male	Female
32. Chest depth [1/]	21.3 (8.4)	20.9 (8.2)	27.7 (10.9)	26.1 (10.3)
33. Buttock depth	20.7 (8.1)	18.8 (7.4)	27.5 (10.8)	23.3 (9.2)
34. Chest breadth	29.5 (11.6)	25.6 (10.1)	36.5 (14.4)	30.7 (12.1)
35. Hip breadth, standing	32.3 (12.7)	32.5 (12.8)	38.5 (15.2)	38.2 (15)
36. Shoulder (bideltoid) breadth	44.1 (17.4)	38.8 (15.3)	52.6 (20.7)	45 (17.7)
37. Forearm-forearm breadth	48.2 (19)	N/A	60.7 (23.9)	N/A
38. Hip breadth, sitting	34.2 (13.5)	34.5 (13.6)	41.8 (16.5)	41.9 (16.5)

FOOTNOTE:
[1/] Bust depth for women.
NOTE:
1. N/A = Not available.

Downloaded from http://www.everyspec.com

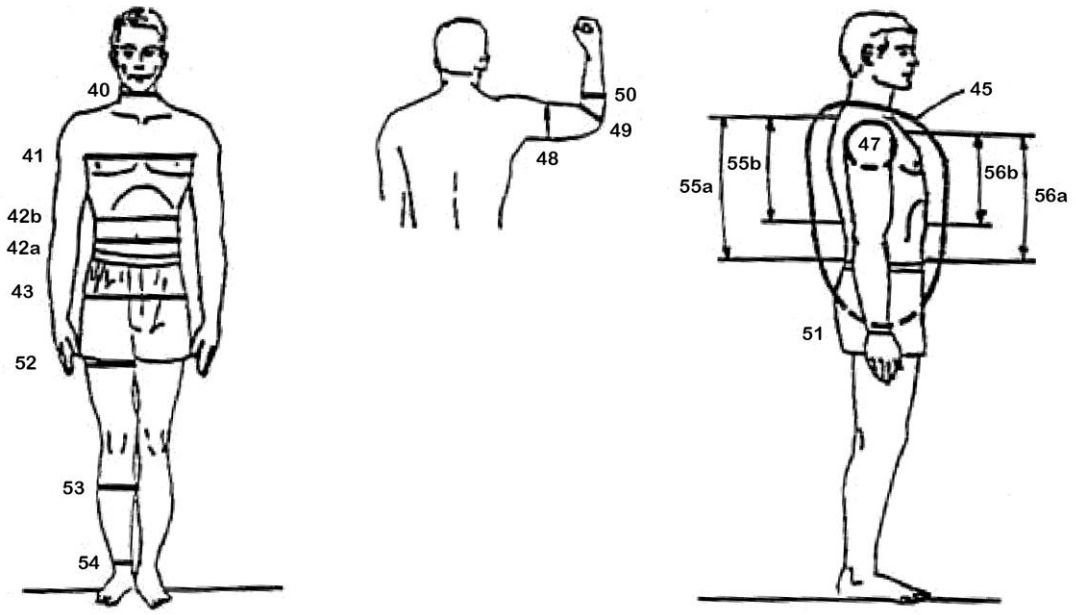

FIGURE B-4. Circumferences and surface dimensions.

Downloaded from http://www.everyspec.com

TABLE B-X. Circumferences and surface dimensions – general forces.

	Percentile values in cm (in)			
	5th percentile		95th percentile	
	Male	Female	Male	Female
40. Neck circumference	35.3 (13.9)	29.2 (11.5)	41.6 (16.4)	36.7 (14.4)
41. Chest circumference [1/]	91.2 (35.9)	81.8 (32.2)	110.9 (43.7)	104.3 (41.1)
42a. Waist circumference (omphalion)	70.2 (27.6)	65.9 (27.1)	101.5 (40)	98.2 (38.7)
42b. Waist circumference (natural indentation)	75.1 (29.6)	64.4 (25.3)	98.4 (38.7)	84.3 (33.2)
43. Hip (buttock) circumference, standing	90.8 (35.8)	89 (35.1)	108.8 (42.8)	109.7 (43.2)
45. Vertical trunk circumference, standing	150.6 (59.3)	148 (58.3)	176.9 (69.7)	168.7 (66.4)
47. Arm scye circumference	40.9 (16.1)	33.6 (13.2)	49.8 (19.6)	41.2 (16.2)
48. Biceps circumference, flexed	29.7 (11.7)	24.8 (9.8)	37.4 (14.7)	32.5 (12.8)
49. Elbow circumference, flexed	25.5 (10)	22.2 (8.7)	30 (11.8)	30 (11.8)
50. Forearm circumference, flexed	26.5 (10.4)	23 (9.1)	33.6 (13.2)	27.9 (11)
51. Wrist circumference	15.7 (6.2)	14.3 (5.6)	18.8 (7.4)	16.3 (6.4)
52. Upper thigh circumference	49.1 (19.3)	51.6 (20.3)	66.5 (26.2)	67 (26.4)
53. Calf circumference	32.7 (12.9)	31.5 (12.4)	42.1 (16.6)	39.1 (15.4)
54. Ankle circumference	20 (7.9)	18.6 (7.3)	24.2 (9.5)	23.3 (9.2)
55a. Waist (omphalion) – back length	43.5 (17.1)	42.4 (16.7)	52.7 (20.7)	49.5 (19.5)
55b. Waist (natural indentation) – back length	37.4 (14.7)	34.6 (13.6)	45.1 (17.8)	44.3 (17.4)
56a. Waist (omphalion) – front length	38.6 (15.2)	36.9 (14.5)	45.7 (18)	44.3 (17.4)
56b. Waist (natural indentation) – front length	31 (12.2)	27.5 (10.8)	38.3 (15.1)	36.4 (14.3)

NOTE:
[1/] Bust circumference for women.

Downloaded from http://www.everyspec.com

TABLE B-XI. Circumferences and surface dimensions – Army air crew.

	Percentile values in cm (in)			
	5th percentile		95th percentile	
	Male	Female	Male	Female
40. Neck circumference	35.3 (13.9)	29.3 (11.5)	41.2 (16.2)	34.5 (13.6)
41. Chest circumference [1/]	91.2 (35.9)	81.8 (32.2)	110.9 (43.7)	104.3 (41.1)
42a. Waist circumference (omphalion)	76.7 (30.2)	68.9 (27.1)	101.5 (39.9)	98.2 (38.7)
42b. Waist circumference (natural indentation)	75.1 (29.6)	64.4 (25.3)	96.7 (38.1)	87.6 (34.5)
43. Hip (buttock) circumference, standing	90.8 (35.8)	89 (35.1)	108.8 (42.8)	109.7 (43.2)
45. Vertical trunk circumference, standing	154.5 (60.8)	148 (58.3)	176.9 (69.7)	168.7 (66.4)
47. Arm scye circumference	40.9 (16.1)	34.5 (13.6)	48.5 (19.1)	42.2 (16.6)
48. Biceps circumference, flexed	29.7 (11.7)	24.8 (9.8)	37.4 (14.7)	32.5 (12.8)
49. Elbow circumference, flexed	25.5 (10)	22.2 (8.7)	30 (11.8)	26.5 (10.4)
50. Forearm circumference, flexed	27.3 (10.7)	23.1 (9.1)	32.9 (13)	28 (11)
51. Wrist circumference	16.2 (6.4)	14.3 (5.6)	18.6 (7.3)	16.3 (6.4)
52. Upper thigh circumference	52.5 (20.7)	51.6 (20.3)	66.5 (26.2)	67 (26.4)
53. Calf circumference	34.2 (13.5)	32 (12.6)	41.6 (16.4)	39.6 (15.6)
54. Ankle circumference	20.2 (8.0)	19.1 (7.5)	24.2 (9.5)	22.8 (9.0)
55a. Waist (omphalion) – back length	44.7 (17.6)	42.4 (16.7)	52.7 (20.7)	49.5 (19.5)
55b. Waist (natural indentation) – back length	38.7 (15.2)	34.6 (13.6)	45.7 (18)	42.2 (16.6)
56a. Waist (omphalion) – front length	38.6 (15.2)	36.9 (14.5)	45.6 (18)	44.3 (17.4)
56b. Waist (natural indentation) – front length	32 (12.6)	29.1 (11.5)	38.3 (15.1)	36.4 (14.3)

NOTE:
[1/] Bust circumference for women.

Downloaded from http://www.everyspec.com

TABLE B-XII. Circumferences and surface dimensions – Air Force pilots.

	Percentile values in cm (in)			
	5th percentile		95th percentile	
	Male	Female	Male	Female
40. Neck circumference	34.9 (13.7)	31.6 (12.4)	41.6 (16.4)	36.5 (14.4)
41. Chest circumference [1/]	88.6 (34.9)	82.7 (32.6)	109.4 (43.1)	96.1 (37.8)
42a. Waist circumference (omphalion)	75.7 (29.8)	N/A	100.1 (39.4)	N/A
42b. Waist circumference (natural indentation)	N/A	60.8 (23.9)	N/A	73 (28.7)
43. Hip (buttock) circumference, standing	89.7 (35.3)	88.7 (34.9)	107.9 (42.5)	102.7 (40.4)
45. Vertical trunk circumference, standing	97.1 (38.2)	93.9 (37)	119.3 (47)	107.4 (42.3)
47. Arm scye circumference	156.7 (61.7)	150.6 (59.3)	180.2 (70.9)	166 (65.4)
48. Biceps circumference, flexed	150.4 (59.2)	147.6 (58.1)	173.2 (68.2)	161.8 (63.7)
49. Elbow circumference, flexed	43.8 (17.2)	34.3 (13.5)	53 (20.9)	40.4 (15.9)
50. Forearm circumference, flexed	29.1 (11.5)	23.6 (9.3)	36.6 (14.4)	29.1 (11.5)
51. Wrist circumference	28.5 (11.2)	25 (9.8)	34.2 (13.5)	30.1 (11.9)
52. Upper thigh circumference	27.2 (10.7)	23 (9.1)	32.4 (12.8)	27.1 (10.7)
53. Calf circumference	16.2 (6.4)	14.2 (5.6)	19.2 (7.6)	16.3 (6.4)
54. Ankle circumference	51.5 (20.3)	49.5 (19.5)	66.2 (26.1)	60.8 (23.9)
55a. Waist (omphalion) – back length	33.5 (13.2)	31.2 (12.3)	41 (16.1)	37.4 (14.7)
55b. Waist (natural indentation) – back length	20.4 (8.0)	19.7 (7.8)	24.6 (9.7)	23.5 (9.3)
56a. Waist (omphalion) – front length	43.1 (17)	39.3 (15.5)	50.9 (20)	45.4 (17.9)
56b. Waist (natural indentation) – front length	36.9 (14.5)	31.6 (12.4)	44.2 (17.4)	37.7 (14.8)

FOOTNOTE:

[1/] Bust circumference for women.

NOTE:

1. N/A = not available.

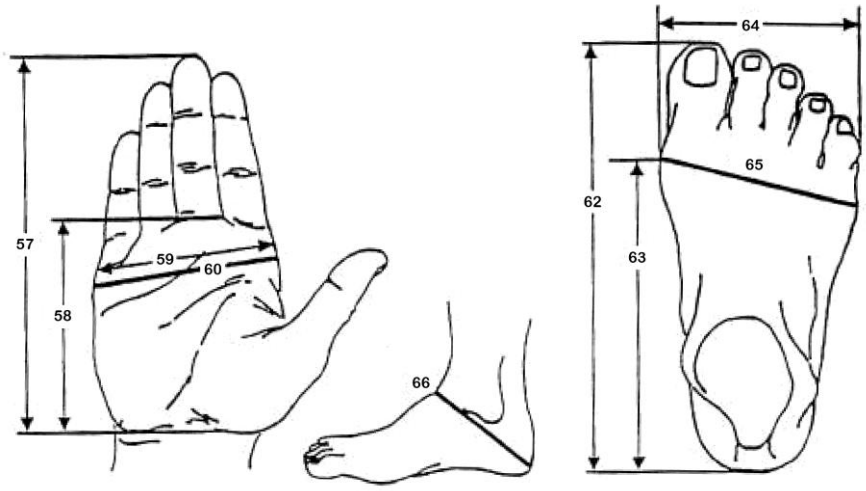

FIGURE B-5. Hand and foot dimension.

Downloaded from http://www.everyspec.com

TABLE B-XIII. Hand and foot dimensions – general forces.

	Percentile values in cm (in)			
	5th percentile		95th percentile	
	Male	Female	Male	Female
57. Hand length	17.5 (6.9)	16.5 (6.5)	21.1 (8.3)	20.1 (7.9)
58. Palm length [1/]	9.6 (3.8)	9 (3.5)	11.7 (4.6)	10.8 (4.3)
59. Hand breadth	8.2 (3.2)	6.9 (2.7)	9.8 (3.9)	8.6 (3.4)
60. Hand circumference	19.9 (7.8)	16.8 (6.6)	22.9 (9.0)	20 (7.9)
62. Foot length	24.6 (9.7)	23.3 (9.2)	29.2 (11.5)	26.5 (10.4)
63. Instep length	17.9 (7.0)	16.4 (6.5)	21.4 (8.4)	19.5 (7.7)
64. Foot breadth	9.0 (3.5)	8.4 (3.3)	11 (4.3)	9.8 (3.9)
65. Foot circumference	22.9 (9.0)	20.5 (8.1)	27.3 (10.7)	24.2 (9.5)
66. Heel-ankle circumference	31.3 (12.3)	28.1 (11.1)	36.2 (14.3)	32.8 (12.9)

NOTE:

[1/] Data for males were compiled from the 1966 survey of U.S. Army Men, the 1966 survey of U.S. Marines, and the 1965 survey of U.S. Air Force Men. Data for females were compiled from the 1977 survey of U.S. Army Women and the 1968 survey of U.S. Air Force Women.

TABLE B-XIV. Hand and foot dimensions – Army air crew.

	Percentile values in cm (in)			
	5th percentile		95th percentile	
	Male	Female	Male	Female
57. Hand length	18.1 (7.1)	17.2 (6.8)	20.9 (8.2)	19.5 (7.7)
58. Palm length	N/A	N/A	N/A	N/A
59. Hand breadth	8.4 (3.3)	7.5 (3.0)	9.7 (3.8)	8.6 (3.4)
60. Hand circumference	19.9 (7.8)	17.6 (6.9)	22.9 (9.0)	20.1 (7.9)
62. Foot length	25 (9.8)	23.3 (9.2)	28.9 (11.4)	26.5 (10.4)
63. Instep length	18.2 (7.2)	17 (6.7)	21.4 (8.4)	19.6 (7.7)
64. Foot breadth	9.2 (3.6)	8.4 (3.3)	10.8 (4.3)	9.8 (3.9)
65. Foot circumference	23.1 (9.1)	21 (8.3)	26.9 (10.6)	24.4 (9.6)
66. Heel-ankle circumference	31.3 (12.3)	28.9 (11.4)	36.2 (14.3)	32.8 (12.9)

NOTE:

1. N/A = not available.

Downloaded from http://www.everyspec.com

TABLE B-XV. Hand and foot dimensions – Air Force pilots.

	Percentile values in cm (in)			
	5th percentile		95th percentile	
	Male	Female	Male	Female
57. Hand length	17.8 (7.0)	17.6 (6.9)	20.5 (8.1)	20.4 (8)
58. Palm length	10 (3.9)	N/A	11.8 (4.6)	N/A
59. Hand breadth	8.2 (3.2)	7.1 (2.8)	9.6 (3.8)	8.3 (3.3)
60. Hand circumference	20 (7.9)	17.2 (6.8)	23.1 (9.1)	19.9 (7.8)
61. Hand thickness	2.4 (0.9)	N/A	3.1 (1.2)	N/A
62. Foot length	25.1 (9.9)	23.2 (9.1)	29 (11.4)	26.3 (10.4)
63. Instep length	18.3 (7.2)	N/A	21.4 (8.4)	N/A
64. Foot breadth	9.0 (3.5)	8.2 (3.2)	10.6 (4.2)	9.9 (3.9)
65. Foot circumference	22.9 (9.0)	N/A	27 (10.6)	N/A
66. Heel-ankle circumference	31.7 (12.5)	N/A	36.3 (14.3)	N/A

NOTE:
1. N/A = not available.

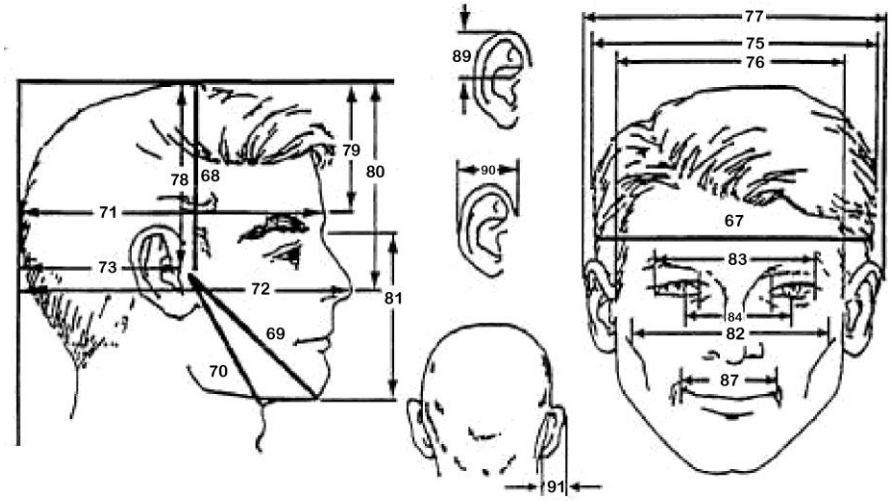

FIGURE B-6. Head and face dimensions.

Downloaded from http://www.everyspec.com

TABLE B-XVI. Head and face dimensions – general forces.

	Percentile values in cm (in)			
	5th percentile		95th percentile	
	Male	Female	Male	Female
67. Head circumference	53.6 (21.1)	52.3 (20.6)	59.3 (23.4)	57.6 (22.7)
68. Bitragion-coronal curvature	33.2 (13.1)	31.6 (12.4)	38 (15)	35.9 (14.1)
69. Bitragion-menton curvature	30.4 (12)	28.2 (11.1)	34.8 (13.7)	32.6 (12.8)
70. Bitragion-submandibular curvature	27.8 (10.9)	25.6 (10.1)	33 (13)	29.7 (11.7)
71. Head length	18.3 (7.2)	17.3 (6.8)	21 (8.3)	19.8 (7.8)
72. Pronasale to wall	20.5 (8.1)	19.7 (7.8)	23.6 (9.3)	22.9 (9.0)
73. Tragion to wall	8.6 (3.4)	8.6 (3.4)	12.6 (5.0)	11.8 (4.6)
75. Head breadth	14.3 (5.6)	13.5 (5.3)	16.5 (6.5)	15.5 (6.1)
76. Bitragion breadth	12.6 (5.0)	12.1 (4.8)	15.5 (6.1)	14.5 (5.7)
77. Biauricular breadth	17.4 (6.9)	14.2 (5.6)	21 (8.3)	19.5 (7.7)
78. Head height (tragion to top of head)	12.1 (4.8)	11.3 (4.4)	14.5 (5.7)	14.1 (5.6)
79. Glabella to top of head	7.6 (3.3)	7.7 (3.0)	10.8 (4.3)	10 (3.9)
80. Pronasale to top of head	13.8 (5.4)	12.8 (5.0)	16.6 (6.5)	16.8 (6.6)
81. Face length (menton-sellion)	10.7 (4.2)	9.6 (3.8)	13.3 (5.2)	12.4 (4.9)
82. Face (bizygomatic) breadth	13.1 (5.2)	12.7 (5.0)	15.3 (6.0)	14.5 (5.7)
83. Biocular breadth	11.3 (4.4)	11.1 (4.4)	13.1 (5.2)	12.9 (5.1)
84. Interpupillary breadth	5.4 (2.1)	5.1 (2.0)	7.1 (2.8)	6.9 (2.7)
87. Lip length (mouth breadth)	4.4 (1.7)	3.7 (1.5)	6.3 (2.5)	6.2 (2.4)
89. Ear length above tragion	2.5 (1.0)	2.5 (1.0)	3.6 (1.4)	3.3 (1.3)
90. Ear breadth	3.2 (1.3)	2.4 (0.9)	4.2 (1.7)	3.9 (1.5)
91. Ear protrusion	1.7 (0.7)	1.7 (0.7)	3.0 (1.2)	2.7 (1.1)

Downloaded from http://www.everyspec.com

TABLE B-XVII. Head and face dimensions – Army air crew.

	Percentile values in cm (in)			
	5th percentile		95th percentile	
	Male	Female	Male	Female
67. Head circumference	54.8 (21.6)	52.6 (20.7)	59.3 (23.4)	56.8 (22.4)
68. Bitragion-coronal curvature	33.3 (13.1)	31.7 (12.5)	37.3 (14.7)	35.9 (14.1)
69. Bitragion-menton curvature	31 (12.2)	28.3 (11.1)	34.9 (13.7)	32 (12.6)
70. Bitragion-submandibular curvature	28.8 (11.3)	25.8 (10.2)	33.1 (13)	29.9 (11.8)
71. Head length	18.8 (7.4)	17.6 (6.9)	20.9 (8.2)	19.8 (7.8)
72. Pronasale to wall	20.9 (8.2)	19.9 (7.8)	23.2 (9.1)	22.3 (8.8)
73. Tragion to wall	9.1 (3.6)	8.8 (3.5)	10.8 (4.3)	10.6 (4.2)
75. Head breadth	14.5 (5.7)	13.8 (5.4)	16.3 (6.4)	15.3 (6.0)
76. Bitragion breadth	13.5 (5.3)	12.8 (5.0)	15.4 (6.1)	14.5 (5.7)
77. Biauricular breadth	17.9 (7.0)	16.7 (6.6)	21.1 (8.3)	19.7 (7.8)
78. Head height (tragion to top of head)	12.1 (4.8)	11.6 (4.6)	13.9 (5.5)	13.5 (5.3)
79. Glabella to top of head	8.6 (3.4)	7.8 (3.1)	10.8 (4.3)	10.1 (4.0)
80. Pronasale to top of head	14 (5.5)	13.1 (5.2)	16.5 (6.5)	15.8 (6.2)
81. Face length (menton-sellion)	11.2 (4.4)	10.5 (4.1)	13.2 (5.2)	12.5 (4.9)
82. Face (bizygomatic) breadth	13.3 (5.2)	12.7 (5.0)	15.3 (6.0)	14.5 (5.7)
83. Biocular breadth	11.4 (4.5)	11 (4.3)	13 (5.1)	12.7 (5.0)
84. Interpupillary breadth	5.9 (2.3)	5.6 (2.2)	7.0 (2.8)	6.6 (2.6)
87. Lip length (mouth breadth)	5.1 (2.0)	4.8 (1.9)	6.3 (2.5)	6 (2.4)
89. Ear length above tragion	2.8 (1.1)	2.6 (1.0)	3.6 (1.4)	3.3 (1.3)
90. Ear breadth	3.4 (1.3)	3.1 (1.2)	4.2 (1.7)	3.9 (1.5)
91. Ear protrusion	2.0 (0.8)	1.7 (0.7)	3.0 (1.2)	2.8 (1.1)

Downloaded from http://www.everyspec.com

TABLE B-XVIII. Head and face dimensions – Air Force pilots.

	Percentile values in cm (in)			
	5th percentile		95th percentile	
	Male	Female	Male	Female
67. Head circumference	55.2 (21.7)	52.9 (20.8)	59.9 (23.6)	57.9 (22.8)
68. Bitragion-coronal curvature	33.7 (13.3)	32 (12.6)	37.9 (14.9)	36.7 (14.4)
69. Bitragion-menton curvature	30.6 (12)	N/A	34.7 (13.7)	N/A
70. Bitragion-submandibular curvature	28.4 (11.2)	N/A	33.6 (13.2)	N/A
71. Head length	18.8 (7.4)	17.5 (6.9)	21 (8.3)	19.7 (7.8)
72. Pronasale to wall	21.4 (8.4)	20 (7.9)	23.9 (9.4)	23 (9.1)
73. Tragion to wall	9.3 (3.7)	9.0 (3.5)	11.4 (4.5)	11.9 (4.7)
75. Head breadth	14.8 (5.7)	13.6 (5.4)	16.5 (6.5)	15.5 (6.1)
76. Bitragion breadth	13.4 (5.3)	12.2 (4.8)	15.2 (6.0)	13.8 (5.4)
77. Biauricular breadth	17.5 (6.9)	14.4 (5.7)	20.2 (8.0)	17.5 (6.9)
78. Head height (tragion to top of head)	12.4 (4.9)	11.7 (4.6)	14.5 (5.7)	14.2 (5.6)
79. Glabella to top of head	7.7 (3.0)	N/A	10.9 (4.3)	N/A
80. Pronasale to top of head	13 (5.1)	13.3 (5.2)	16.6 (6.5)	17.1 (6.7)
81. Face length (menton-sellion)	11 (4.3)	9.8 (3.9)	13 (5.1)	11.8 (4.6)
82. Face (bizygomatic) breadth	13.4 (5.3)	12 (4.7)	15.1 (5.9)	13.8 (5.4)
83. Biocular breadth	8.4 (3.3)	9.0 (3.5)	10 (3.9)	10.6 (4.2)
84. Interpupillary breadth	5.7 (2.2)	N/A	6.9 (2.7)	N/A
87. Lip length (mouth breadth)	4.6 (1.8)	3.7 (1.5)	5.8 (2.3)	5.1 (2.0)
89. Ear length above tragion	2.5 (1.0)	N/A	3.5 (1.4)	N/A
90. Ear breadth	3.3 (1.3)	2.4 (0.9)	4.3 (1.7)	3.5 (1.4)
91. Ear protrusion	1.7 (0.7)	N/A	2.8 (1.1)	N/A

NOTE:
1. N/A = not available.

Downloaded from http://www.everyspec.com

INDEX

PARAGRAPH

A

Accommodation

Anthropometric – multiple dimension accommodation 5.8.4.1.6

Central 90 percent accommodation 3.3.5

Design objectives 4.4.4

Ladders for trailers and vans 5.6.10.2

Night vision device (NVD) accommodation 5.13.2.10.65.13.2.1

Physical accommodation 5.8, 6.4.2.5.8

Visual accommodation – optical instruments and related equipment 5.13.2.1

Acronyms, abbreviations, and definitions 3

Advisory and alerting 5.2.2.6.11

Alerting signals 5.3.1.2.3

Advisory signals 5.3.1.2.4

Audio signals 5.3.1.2

Caution and warning labels for safety and hazards 5.4.8.5

Caution signals 5.3.1.2.2

Warning signals 5.3.1.2.1

Aircrew systems 4.1.4, 5.2.2.3.1.e, 5.2.2.4.1.a, 5.3.1.1.12

Alarm

Automated systems 5.12.3.1.25

Definition 3.3.1

Applicable documents 2

Automation

Alarms 5.12.3.1.25

Alerts 5.12.3.1.12, 5.12.3.1.25

Analysis 5.12.3.1.9

Automated function characteristics 4.12.3

Consistancy 5.12.3.1.6, 5.12.3.1.30.a

Control automation 5.12.3.1.35

Controls 5.12.3.1.26

Downloaded from http://www.everyspec.com

Decision aiding 5.12.3.1.16, 5.12.3.1.34
Design requirements 5.12.3.1
Displays 5.12.3.1.26
Fault management 5.12.3.1.24
Human involvement 4.12.2
Human support 5.12.3.1.1
Indication of operating mode 4.12.4
Information 5.12.3.1.17, 5.12.3.1.33
Interface 5.12.3.1.30
Intuitive 5.12.3.1.7
Level of 3.3.19
Modes 5.12.3.1.31
Monitoring 5.12.3.1.32
Multiple systems 5.12.3.1.36
Of functions 4.12.1
Override 5.12.3.1.13
Planning 5.12.3.1.20
Predictability 5.12.3.1.4
Recovery 5.12.3.1.5, 5.12.3.1.21, 5.12.3.1.22, 5.12.3.1.23, 5.12.3.1.25.a
Requirement 4.12
Setup 5.12.3.1.8
User awareness 5.12.3.1.14, 5.12.3.1.15, 5.12.3.1.29
User involvement 5.12.3.1.3, 5.12.3.1.10
User tasks 5.12.3.1.2, 5.12.3.1.1.e

B

Batteries A.13

C

Changes from previous issue 6.4
Chemical, biological, radiological, nuclear, and high-yield explosive (CBRNE)
CBRNE compatibility 4.10.1
Contamination of displays 5.2.2.1.5
Hardness and maintenance 4.10.3.2

Downloaded from http://www.everyspec.com

Hardness and maintenance personnel expertise 4.10.4

Harndess verification..... 4.10.3.1

Performance of mission-essential operations 4.10.2

Requirements..... 4.10

Susceptibility to reduction of inherent CBRNE hardness .. 4.10.3

Survivability of conductors 5.9.14.6.2

Color

Color-coding 5.1.1.4.5

Color-coding of lights ..... Table XIV

Common color association meanings..... Table XV

Functional use of color..... 4.13

Optical instruments, illumination 5.13.2.10

Surface colors – physical environment design 5.11.3

Air Force 5.11.3.3

Army 5.11.3.1

Navy 5.11.3.2

Target shape and color – computer controls..... 5.1.3.1.14

Use of color for design of label characteristics 5.4.6.6

Wavelength values for color discrimination..... Table XIV

Color-coding

Colored ambient illumination..... 5.5.3.1.8

Connectors 5.9.15.6.1

Controls..... 5.1.1.4.5

Displays..... 5.2.2.3.2

Emitter color – dot matrix displays 5.2.3.12.8, 5.2.3.12.9

Examples of shape- and color-coding ..... Figure 28

Transilluminated displays 5.2.3.13.17

Computer user authentication..... 5.14.1

Errors..... 5.14.1.1.1.c

Feedback 5.14.1.1.1.b

Indentification ..... 5.14.1.1.1.d(1)

Log-off 5.14.1.1.2

Log-on..... 5.14.1.1.1

Downloaded from http://www.everyspec.com

Log-on processes 5.14.1.1.1.d

Passwords ..... 5.14.1.1.1.d(2), 5.14.1.1.1.d(3), 5.14.1.1.1.d(4), 5.14.1.1.1.b

Contrast ratio

Definition 3.3.6

Illuminance 5.5.3

Luminance ..... Table XII

Workspace ..... Table XXIV

Controls 5.1, 6.4.2.5.1

Computer Controls 5.1.3

Data entry 5.1.3.4

Interactive control 5.1.3.5

Keyboards ..... 5.1.3.2, table VII

Mouse/trackballs/joysticks ..... 5.1.3.3, figure 4, figure 5, table VIII

Touch-screen controls for displays ..... 5.1.3.1, figure 3, table VI

Control/display integration 5.1.2

Control/display movement ratio 5.1.2.4

Movement relationships 5.1.2.3

Position relationships 5.1.2.2

Signal precedence 5.1.2.5

Eye- and head-based controls 5.1.6

Dwell times 5.1.6.4

Precision 5.1.6.3

Response time 5.1.6.5

Vibration 5.1.6.2

General 5.1.1

Blind operation 5.1.1.7

Coding 5.1.1.4

Compatibility with handwear 5.1.1.6

Direction of movement 5.1.1.2

Feedback 5.1.1.9

Grouping and arrangement 5.1.1.3

Hazardous operation 5.1.1.10

Downloaded from http://www.everyspec.com

Labeling of controls 5.1.1.5

Prevention of accidental actuation 5.1.1.8

Selection 5.1.1.1

Mechanical controls 5.1.4

Arm, hand, and thumb-finger controls 5.1.4.3.2

Continuous adjustment linear controls 5.1.4.2.2

Continuous adjustment rotary controls 5.1.4.1.2

Dimensions, resistance, displacement, and separation 5.1.5.2

Discrete adjustment linear controls 5.1.4.2.1

Discrete adjustment rotary controls 5.1.4.1.1

Foot controls ..... 5.1.4.3.3, figure 23

High-force controls 5.1.4.3

J-Handles 5.1.4.4

Linear controls 5.1.4.2

Miniature controls 5.1.5

Other requirements 5.1.5.3

Rotary controls ..... 5.1.4.1, figure 6

Vehicle controls 5.6.3

D

Design for maintainability A.2

Dimensions, resistance, and separation ..... 5.1.3.1.15, 5.1.3.2.3, 5.1.4.2.1.a(5), 5.1.4.2.1.d(3)

E

Environment 5.5, 6.4.2.5.5

Acoustical energy and noise 5.5.4

Environmental range 5.5.1

G-loading 5.5.7

General workplace considerations 5.5.2

Illuminance 5.5.3

Physical environment design 5.11

Stealth and covert operations 5.5.6

Vibration and shock 5.5.5

Virtual environment 5.12.1

Downloaded from http://www.everyspec.com

F

Field of view

Definition 3.3.13

Head-up displays (HUDs) 5.2.3.6.7

Helmet-mounted displays 5.2.3.7.9

Fuse

Circuit breakers 5.9.18.2

Correct instrument-type fuse holder wiring ..... Figure 51

Definition 3.3.15

Failure indications 5.9.18

Maintenance accessability 5.9.2.6

Fuze

Defintion 3.3.16

Weapon systems 5.13.3.1.6

G

Graphical user interfaces 5.2.2.5.1

Ground vehicles 5.6, 6.4.2.5.6

Automotive subsystems 5.6.7

Cranes, materials handling, and construction 5.6.11

Ladders for trailers and vans 5.6.10

Pedals 5.6.3.3

Trailers, vans, and intravehicular connections 5.6.8

Vans and transportable enclosures 5.6.9

Vehicle controls 5.6.3

Vehicle heating and ventilation 5.6.6

Vehicle operating instructions 5.6.4

Vehicle seating 5.6.2

Vehicle visibility 5.6.5

H

Help 5.2.2.7

K

Key words 6.3

Downloaded from http://www.everyspec.com

L

Labeling 5.4, 6.4.2.5.4

Caution and warning labels for safety and hazards 5.4.8.5

Contents 5.4.4

Design of label characters 5.4.6

Equipment labeling 5.4.7

Orientation 5.4.2

Labeling for identification 5.4.8

Location 5.4.3

Readability qualities 5.4.5

M

Maintenance accessibility 5.9, 6.4.2.5.9, 6.4.2.5.16

Access and accessibility 5.9.4

Access openings and covers 5.9.9

Cases 5.9.7

Case and cover mounting 5.9.6

Conductors 5.9.14

Connectors 5.9.15

Diagnostics and troubleshooting 5.9.21

Failure indications and fuse requirements 5.9.18

Fasteners 5.9.10

Hydraulic systems 5.9.22

Lifting 5.9.13

Lubrication 5.9.5

Mounting 5.9.12

Printed circuit boards 5.9.19

Standardization 5.9.1.1

Stored energy devices 5.9.20

Test equipment 5.9.17

Test points 5.9.16

Unit design for efficient handling 5.9.11

P

Pedals ..... Figure 21

Downloaded from http://www.everyspec.com

Dimensions ..... Figure 21

Displacement ..... Figure 21

Ground vehicle 5.6.3.3

Minimum 3.3.22

Resistance ..... Figure 21

Separation ..... Figure 21

Peripherals 5.14, 6.4.2.5.14

Plotters and recorders 5.14.2

Printers 5.2.2.8.6

Physical accommodation 5.8, 6.4.2.5.8, 6.4.2.5.17

Anthropometric design 5.8.4

Design limits 5.8.3

Human strength and handling capacity 5.8.6

Hand trucks and wheeled dollies 5.8.6.4

Handles and grasp areas 5.8.6.5.3

Lifting limits, push/pull 5.8.6.3

Load carrying 5.8.6.2

Push and pull forces ..... 5.8.6.5, figure 55

Strength 5.8.5

Target populations 5.8.2

Physical environment design 5.11, 6.4.2.5.11

Catwalks, tunnels, and crawl spaces 5.11.1.7

Doors 5.11.2.3

Elevators, inclinators, and hydraulic-operated work platforms 5.11.1.6

Hatches 5.11.2.4

Ladders 5.11.1.3

Passageways, ingress, and egress 5.11.2

Personnel platforms and work areas 5.11.1.5

Ramps 5.11.1.4

Stairs 5.11.1.2

Surface colors 5.11.3

Printers 5.2.2.8.6

Downloaded from http://www.everyspec.com

R

Remote controls 5.12.2.1, 5.15.1.9

Remote handling 5.12.2

Characters 5.12.2.1

Feedback 5.12.2.2

Illumination 5.12.2.6

Manipulators 5.12.2.4

Unmanned aerial vehicle (UAV) 5.12.3.2

Unmanned ground vehicle (UGV) 5.12.3.3

Unmanned surface vehicle (USV) 5.12.3.5

Unmanned underwater vehicle (UUV) 5.12.3.4

Viewing equipment 5.12.2.5

Warnings 5.12.2.3

S

Small systems, equipment, and weapons 5.13, 6.4.2.5.13

Gunner tracking performace 5.13.1

Optical instruments, magnification 5.13.2.3

Optical instruments, optical quality 5.13.2.8

Weapons systems 5.13.3

Speech and audio systems 5.3, 6.4.2.5.3

Alternative input device 5.3.3

Audio displays 5.3.1

Audibility 5.3.1.4.1

Message content 5.3.1.5.5

Relation to visual displays 5.3.1.2.6

Speech recognition 5.3.2

Standardization

Definition 4.2

Hydraulics, cranes, materials handling, and construction ... 5.6.11.12.1

Hydraulic systems 5.9.22.1

In labeling 5.4.3.7

Maintenance accessibility 5.9.1.1

Stowage of equipment A.7

Downloaded from http://www.everyspec.com

T

Task performance

Defintion 4.1.4

Virtual environments 5.12.1

Teleoperations 5.12.5

Teleopresence 5.12.4

Test equipment A.12

U

User

Audio displays 5.3.1.7

Automated systems 5.12.3

Capabilities 4.1.3

Control compatibility 5.1.1.1.1

Design requirements 5.12.3.1

Graphical user interfaces 5.2.2.5.1

User authentication – peripherals 5.14.1

User comfort and convenience – speech-transmission equipment 5.3.1.6.2

User control orientation 5.1.1.2.3

User control of update rate – dynamic displays 5.2.2.6.4

User population 5.8.6.3.11

V

Valve controls 5.15, 6.4.2.5.15

Handwheel-operated valves, mounting heights, and orientations 5.15.3

Lever-operated valves, mounting heights, and orientations 5.15.4

Valve criticality and location 5.15.2

Valve placement, orientation, and location 5.15.5

Alternative valve orientations 5.15.5

Clearance 5.15.1.2, 5.15.1.14

Emergency valves 5.15.1.3

Extenders 5.15.1.8

General design requirements 5.15.1

Downloaded from http://www.everyspec.com

Handle location 5.15.1.1

Heavy valve location 5.15.1.13

Indicators 5.15.1.7

Labeling 5.15.1.10

Motorized 5.15.1.11

Operating force 5.15.1.12

Remote control 5.15.1.9

Valve accessability 5.15.5.3, 5.15.5.4, 5.15.5.5, 5.15.5.7

Valve closure 5.15.1.5

Valve covers 5.15.1.4

Valve criticality and location 5.15.2, 5.15.3.4

Valve manifolds 5.15.5.8

Valve-mounting heights and orientations, handwheel operated 5.15.3.3

Valve position 5.15.1.6

Virtual environments (VE) 5.12.1, 6.4.2.5.12

Feedback 5.12.2.2

Mental model 5.12.1.2

Natural environment 5.12.1.1

VE workstation design 5.12.1.3

VE sickness 5.12.1.4

Visual displays 5.2, 6.4.2.5.2

Displays – content 5.2.2

Coding 5.2.2.3

Data and message transmission 5.2.2.9

Dynamic displays 5.2.2.6

Graphic and reprentational displays 5.2.2.5

Help 5.2.2.7

Information architecture 5.2.2.2

Text presentation 5.2.2.4

Printing display 5.2.2.8

Displays – hardware 5.2.3

3-D 5.2.3.5

Downloaded from http://www.everyspec.com

Dot matrix/segmented displays 5.2.3.12

Electronic 5.2.3.1

Handheld 5.2.3.4

Head-up displays (HUDs) 5.2.3.6

Helmet-mounted displays (HMDs) 5.2.3.7

Large-screen 5.2.3.2

Legend lights 5.2.3.14

Light-emitting diodes (LEDs) 5.2.3.10

Liquid crystal displays (LCDs) 5.2.3.8

Other displays (CRTs, electroluminescent displays, others) 5.2.3.11

Plasma displays 5.2.3.9

Simple indicator lights 5.2.3.15

Small-screen 5.2.3.3

Transilluminated displays 5.2.3.13

Transilluminated panel assemblies 5.2.3.16

Installation of visual displays 5.2.1

Contrast displays 5.2.1.5

Displays for night operations 5.2.1.6

Display illumination and light distribution 5.2.1.4

Display location and arrangement 5.2.1.2

Luminance considerations for visual displays 5.2.1.3

Relation to visual displays 5.3.1.2.6

Warning, hazards, and safety 5.7.3

W

Warnings, hazards, and safety 5.7, 6.4.2.5.7

Auditory warnings 5.7.4

Caution and warning labels for safety and hazards 5.4.8.5

Display of warnings and hazards 5.7.2

Dust 5.7.11

Electrical hazards 5.7.9.1

Fire 5.7.10

Fluid hazards 5.7.9.3

Downloaded from http://www.everyspec.com

General equipment-related hazards 5.7.7
General workspace hazards 5.7.6
Pipe, hose, and tube line identification..... 5.7.5
Platforms 5.7.8
Mechanical hazards 5.7.9.2
Mud and water..... 5.7.12
Radiation 5.7.9.5
Safety barriers 5.7.14
Toxic hazards 5.7.9.4
Visual displays 5.7.3
Warning signals..... 5.3.1.2.1
Warnings for training system 5.7.13
Workspace design..... 5.10, 6.4.2.5.10
Control surfaces 5.10.3.7
Illumination 5.10.5
Mobile workspace 5.10.3.3
Kneeling workspaces..... 5.10.3.5
Special-purpose console design..... 5.10.4
Squatting workspaces 5.10.3.6
Work benches..... 5.10.3.4
Workstation design..... 5.10.3
Seated operations 5.10.3.2
Standing operations..... 5.10.3.1

Downloaded from http://www.everyspec.com

Custodians:
Army – MI
Navy – AS
Air Force – 11

Preparing activity:
Army – MI
(Project HFAC-2010-001)

Review activities:
Army – AR, AT, AV, CR, EA, GL, MD, MR, PT, TE, TM
Navy – CG, EC, MC, ND, OS, PE, SH, AS
Air Force – 01, 10, 13, 19, 40
DLA – DH
OSD – HS, SE
DISA – DC2
NIMA – MP
NSA – NS

Civil agencies:
DOT – FAA
NASA – AE*
NHTSA – OST

Industry associations:
AAMI
AIA
ASTM
EIA
HFES
SAE

NOTE: The activities listed above were interested in this document as of the date of this document. Since organizations and responsibilities can change, you should verify the currency of the information above using the ASSIST Online database at https://assist.daps.dla.mil.